DOCKET

SUPREME COURT
OF THE UNITED STATES

No. 13-369
Title: Nautilus, Inc., Petitioner
v.
Biosig Instruments, Inc.
Docketed: September 23, 2013
Lower Ct: United States Court of Appeals for the Federal Circuit
Case Nos.: (2012-1289)
Decision Date: April 26, 2013
Rehearing Denied: June 28, 2013
Questions Presented

~~Date~~~	~~~~~~~Proceedings and Orders~~~~~~~~~~~~~~~~~~~~
Aug 25 2013	Consent to the filing of amicus cuirae briefs, in support of either party or of neither party, received from counsel for the petiioner.
Sep 21 2013	Petition for a writ of certiorari filed. (Response due October 23, 2013)
Oct 3 2013	Order extending time to file response to petition to and including November 22, 2013.
Oct 23 2013	Brief amici curiae of Amazon.Com, Inc., et al. filed.
Oct 23 2013	Brief amici curiae of Public Knowledge, and The Electronic Frontier Foundation filed.
Nov 22 2013	Brief of respondent Biosig Instruments, Inc. in opposition filed.
Dec 10 2013	Reply of petitioner Nautilus, Inc. filed. (Distributed)
Dec 11 2013	DISTRIBUTED for Conference of January 10, 2014.
Jan 10 2014	Petition GRANTED.
Feb 11 2014	SET FOR ARGUMENT ON Monday, April 28, 2014
Feb 18 2014	Record received from U.S.C.A. Federal Circuit is electronic and located on PACER.
Feb 18 2014	Record received from U.S.D.C. Southern District of New York is Electronic and located on PACER. Record also received on 02/21/2014,(1 Envelope). Part of this record is SEALED and also have 1 Exhibit filed electronically (Not PACER).
Feb 24 2014	Joint appendix filed. (Statement of costs filed)
Feb 24 2014	Brief of petitioner Nautilus, Inc. filed.
Feb 26 2014	Consent to the filing of amicus curiae briefs, in support of either party or of neither party, received from counsel for the petitioner.
Feb 27 2014	Consent to the filing of amicus curiae briefs, in support of either party or of neither party, received from counsel for the respondent.

Feb 28 2014	Brief amicus curiae of AARP filed.
Mar 3 2014	Brief amici curiae of Amazon.Com, Inc., et al. filed.
Mar 3 2014	Brief amicus curiae of Sigram Schindler Beteiligungsgesellschaft mbH in support of neither party filed.
Mar 3 2014	Brief amicus curiae of The Intellectual Property Law Association of Chicago in support of neither party filed.
Mar 3 2014	Brief amicus curiae of Yahoo! Inc. filed.
Mar 3 2014	Brief amicus curiae of Professor S. Menell in support of neither party filed.
Mar 3 2014	Brief amicus curiae of Microsoft Corporation filed.
Mar 3 2014	Brief amicus curiae of American Bar Association in support of neither party filed.
Mar 3 2014	Brief amici curiae of Nova Chemicals Inc., et al. filed.
Mar 3 2014	Brief amicus curiae of Intellectual Property Owners Association in support of neither party filed.
Mar 3 2014	Brief amici curiae of Electronic Frontier Foundation and Public Knowledge filed.
Mar 3 2014	Brief amicus curiae of American Intellectual Property Law Association in support of neither party filed.
Mar 10 2014	CIRCULATED.
Mar 10 2014	Motion for leave to file amicus brief filed by Ananda M. Chakrabarty Ph.D.
Mar 24 2014	Motion for leave to file amicus brief filed by Ananda M. Chakrabarty Ph.D. GRANTED.
Mar 26 2014	Brief of respondent Biosig Instruments, Inc. filed. (Distributed)
Apr 2 2014	Brief amicus curiae of the United States filed. (Distributed)
Apr 2 2014	Motion of the Solicitor General for leave to participate in oral argument as amicus curiae and for divided argument filed.
Apr 2 2014	Brief amici curiae of Nokia Corporation and Nokia USA Inc. filed. (Distributed)
Apr 2 2014	Brief amicus curiae of Biotechnology Industry Organization filed. (Distributed)
Apr 2 2014	Brief amicus curiae of Interval Licensing LLC filed. (Distributed)
Apr 14 2014	Reply of petitioner Nautilus, Inc. filed. (Distributed)
Apr 18 2014	Motion of the Solicitor General for leave to participate in oral argument as amicus curiae and for divided argument GRANTED.
Apr 28 2014	Argued. For petitioner: John D. Vandenberg, Portland, Ore. For respondent: Mark D. Harris, New York, N. Y.; and Curtis E. Gannon, Assistant to the Solicitor General, Department of Justice, Washington, D. C. (for United States, as amicus curiae.)
Jun 2 2014	Judgment VACATED and case REMANDED. Ginsburg, J., delivered the opinion for a unanimous Court.
Jul 7 2014	Judgment affirmed.
Jul 9 2014	Record Returned for U.S.D.C. Southern District of New York.

PETITION FOR WRIT OF CERTIORARI

Supreme Court, U.S.
FILED
SEP 21 2013
OFFICE OF THE CLERK

No. 13-369

IN THE

Supreme Court of the United States

NAUTILUS, INC.,

Petitioner,

v.

BIOSIG INSTRUMENTS, INC.,

Respondent.

ON PETITION FOR A WRIT OF CERTIORARI TO THE UNITED STATES SUPREME COURT OF APPEALS FOR THE FEDERAL CIRCUIT

PETITION FOR A WRIT OF CERTIORARI

JAMES E. GERINGER
JEFFREY S. LOVE
JOHN D. VANDENBERG*
PHILIP WARRICK
KLARQUIST SPARKMAN, LLP
One World Trade Center
Suite 1600
121 S.W. Salmon Street
Portland, OR 97204
(503) 595-5300
john.vandenberg@klarquist.com

Attorneys for Petitioner

*Counsel of Record

September 19, 2013

248504

COUNSEL PRESS

Library of Congress
Law Library

QUESTIONS PRESENTED

Does the Federal Circuit's acceptance of ambiguous patent claims with multiple reasonable interpretations—so long as the ambiguity is not "insoluble" by a court—defeat the statutory requirement of particular and distinct patent claiming?

Does the presumption of validity dilute the requirement of particular and distinct patent claiming?

RULE 29.6 STATEMENT

Nautilus, Inc. has no parent corporation, and no publicly held corporation owns 10% or more of its stock.

TABLE OF CONTENTS

Page

QUESTIONS PRESENTED i

RULE 29.6 STATEMENT ii

TABLE OF CONTENTS..... iii

TABLE OF APPENDICES v

TABLE OF CITED AUTHORITIES vi

PETITION FOR A WRIT OF CERTIORARI..... 1

OPINIONS BELOW..... 1

JURISDICTION..... 1

STATUTORY PROVISIONS INVOLVED..... 2

INTRODUCTION..... 2

STATEMENT OF THE CASE 5

REASONS FOR GRANTING THE PETITION..... 14

I. THE FEDERAL CIRCUIT HAS MISINTERPRETED THE STATUTE 14

A. THE FEDERAL CIRCUIT'S VIEW IS INCOMPATIBLE WITH THIS COURT'S INTERPRETATION... 15

Table of Contents

Page

B. THE PRESUMPTION OF VALIDITY DOES NOT DILUTE THE STATUTORY REQUIREMENT FOR DEFINITE CLAIMS 18

C. THE FEDERAL CIRCUIT IMPROPERLY ALLOWS VAGUE CLAIMS TO BE CURED BY CLAIM CONSTRUCTION 19

D. A SECOND CIRCUIT RULING EXEMPLIFIES THE FEDERAL CIRCUIT'S ERROR 20

II. THIS ERROR HAS DAMAGED OUR PATENT SYSTEM 21

III. THIS CASE IS THE IDEAL VEHICLE THAT *APPLERA* WAS NOT 23

CONCLUSION 26

TABLE OF APPENDICES

Page

APPENDIX A — ORDER OF THE UNITED STATES COURT OF APPEALS FOR THE FEDERAL CIRCUIT, FILED JUNE 28, 2013 ..... 1a

APPENDIX B — OPINION OF THE UNITED STATES COURT OF APPEALS FOR THE FEDERAL CIRCUIT, FILED APRIL 26, 2013 ..... 3a

APPENDIX C — ORDER OF THE UNITED STATES DISTRICT COURT, SOUTHERN DISTRICT OF NEW YORK, FILED JUNE 12, 2012 ..... 33a

APPENDIX D — JUDGMENT OF THE UNITED STATES DISTRICT COURT, SOUTHERN DISTRICT OF NEW YORK, FILED FEBRUARY 23, 2012 ..... 36a

APPENDIX E — SUMMARY ORDER OF THE UNITED STATES DISTRICT COURT, SOUTHERN DISTRICT OF NEW YORK, FILED FEBRUARY 13, 2012 ..... 38a

APPENDIX F — SUMMARY ORDER OF THE UNITED STATES DISTRICT COURT, SOUTHERN DISTRICT OF NEW YORK, FILED SEPTEMBER 29, 2011 ..... 40a

APPENDIX G — TRANSCRIPT OF PROCEEDINGS OF THE UNITED STATES DISTRICT COURT, SOUTHERN DISTRICT OF NEW YORK, DATED FEBRUARY 22, 2012 ..... 50a

TABLE OF CITED AUTHORITIES

Page

CASES

Applera Corp. v. Enzo Biochem, Inc.,
131 S. Ct. 847 (2010) 23, 24

Applera Corp. v. Enzo Biochem, Inc.,
131 S. Ct. 3020 (2011) 23

Bilski v. Kappos,
130 S. Ct. 3218 (2010) 17

Biosig Instruments, Inc. v. Nautilus, Inc.,
715 F.3d 891 (Fed. Cir. 2013) 1

Datamize, LLC v. Plumtree Software, Inc.,
417 F.3d 1342 (Fed. Cir. 2005) 3, 16, 24

Enzo Biochem, Inc. v. Applera Corp.,
605 F.3d 1347 (Fed. Cir. 2010) 4, 17, 19, 20

Evans v. Eaton,
20 U.S. 356 (1822) 15

Ex Parte Miyazaki,
2008 WL 5105055 (B.P.A.I. Nov. 19, 2008) 17

Exxon Research & Eng'g Co. v. United States,
265 F.3d 1371 (Fed. Cir. 2001) ..... *passim*

Festo Corp. v.
Shoketsu Kinzoku Kogyo Kabushiki Co.,
535 U.S. 722 (2002) 16, 18

Cited Authorities

Page

Gen. Elec. Co. v. Wabash Appliance Corp.,
304 U.S. 364 (1938) 15, 21

In re Schreiber,
128 F.3d 1473 (Fed. Cir. 1997) 22

KSR Int'l Co. v. Teleflex Inc.,
550 U.S. 398 (2007) 17

Markman v. Westview Instruments, Inc.,
517 U.S. 370 (1996) 2

Merrill v. Yeomans,
94 U.S. 568 (1876) 3, 15, 17, 18

Microsoft Corp. v. i4i Ltd.,
131 S. Ct. 2238 (2011) 5, 19

Motion Picture Patents Co. v.
Universal Film Mfg. Co.,
243 U.S. 502 (1917) 2

Norton Co. v. Bendix Corp.,
449 F.2d 553 (2d Cir. 1971) 20, 21

Star Scientific, Inc. v. R.J. Reynolds Tobacco Co.,
537 F.3d 1357 (Fed. Cir. 2008) 3, 19

Star Scientific, Inc. v. R.J. Reynolds Tobacco Co.,
655 F.3d 1364 (Fed. Cir. 2011) 19-20

Cited Authorities

Page

United Carbon Co. v. Binney & Smith Co.,
317 U.S. 228 (1942) ..... *passim*

Universal Oil Prods. Co. v. Globe Oil & Ref'g Co.,
322 U.S. 471 (1944) 15

STATUTES

28 U.S.C. § 1254 1

28 U.S.C. § 1295 1

28 U.S.C. § 1331 1

28 U.S.C. § 1338 1

35 U.S.C. § 112 ..... 2, 3, 19

35 U.S.C. § 154 2

35 U.S.C. § 271 2

35 U.S.C. § 282 2

OTHER AUTHORITIES

Christopher A. Cotropia, *The Folly of Early Filing in Patent Law*, 61 Hastings L.J. 65 (2009) 22

Cited Authorities

Page

Executive Office of the President, *Patent Assertion and U.S. Innovation* (June 4, 2013). 22

Federal Trade Comm'n, *The Evolving IP Marketplace: Aligning Patent Notice and Remedies with Competition* (2011) 22-23

Robert C. Faber, *Faber on Mechanics of Patent Claim Drafting* 10-3 (6th ed. 2011) 4

Supplementary Examination Guidelines for Determining Compliance With 35 U.S.C. 112 and for Treatment of Related Issues in Patent Applications, 76 Fed. Reg. 7162 (2011). 17

U.S. Gov't Accountability Office, *Intellectual Property: Assessing Factors That Affect Patent Infringement Litigation Could Help Improve Patent Quality*, GAO-13-465 (Aug. 2013) 4, 5

White House, *FACT SHEET: White House Task Force on High-Tech Patent Issues* (June 4, 2013) . .22

PETITION FOR A WRIT OF CERTIORARI

Petitioner, Nautilus, Inc. ("Nautilus") respectfully petitions this Court for a writ of certiorari to review the judgment of the Court of Appeals for the Federal Circuit in this case.

OPINIONS BELOW

The summary order of the United States District Court for the Southern District of New York, granting summary judgment to Petitioner that the patent claims are invalid for indefiniteness, is unreported, but is reproduced in the appendix to this petition (Pet. App.) at 38a-39a. This order references "the reasons stated on the record" at the summary judgment hearing, the transcript of which is reproduced at Pet. App. 50a-106a. The order denying Respondent's motion for reconsideration is unreported and reproduced at 33a-35a. The opinion of the Federal Circuit and Judge Schall's concurring opinion are reported at 715 F.3d 891, and reproduced at Pet. App. 3a-32a. The Federal Circuit's order denying rehearing en banc is unreported and reproduced at 1a-2a.

JURISDICTION

The district court had jurisdiction pursuant to 28 U.S.C. §§ 1331 and 1338(a). The court of appeals had jurisdiction based on 28 U.S.C. § 1295(a)(1). The court of appeals entered its judgment April 26, 2013. Pet. App. 3a. A timely petition for rehearing en banc was denied on June 28, 2013. Pet. App. 2a-3a. This Court has jurisdiction pursuant to 28 U.S.C. § 1254(1).

STATUTORY PROVISIONS INVOLVED

"The specification shall conclude with one or more claims particularly pointing out and distinctly claiming the subject matter which the applicant regards as his invention." 35 U.S.C. § 112 ¶ 2.[1]

"A patent shall be presumed valid. . . ." 35 U.S.C. § 282(a).

INTRODUCTION

A patent claim is "the portion of the patent document that defines the scope of the patentee's rights." *Markman v. Westview Instruments, Inc.*, 517 U.S. 370, 372 (1996). "These so mark where the progress claimed by the patent begins and where it ends that they have been aptly likened to the description in a deed, which sets the bounds to the grant which it contains." *Motion Picture Patents Co. v. Universal Film Mfg. Co.*, 243 U.S. 502, 510 (1917). Because the patentee is granted "the right to exclude others from making, using, offering for sale, or selling" the invention, 35 U.S.C. § 154(a)(1); *see also* § 271(a), "[i]t has long been understood that a patent must describe the exact scope of an invention," *Markman*, 517 U.S. at 373. Otherwise, a "zone of uncertainty which enterprise and experimentation may enter only at the risk of infringement claims would discourage invention."

---

1. As noted by the Federal Circuit, "Paragraph 2 of 35 U.S.C. § 112 was replaced with newly designated § 112(b) when § 4(c) of the Leahy-Smith America Invents Act ("AIA"), Pub. L. No. 112-29, took effect on September 16, 2012. Nevertheless, the pre-AIA version of § 112 applies because the [patent-in-suit] issued prior to that date." Pet. App. 12a n.8.

United Carbon Co. v. Binney & Smith Co., 317 U.S. 228, 236 (1942).

Accordingly, the Patent Act requires every patent to "conclude with one or more claims particularly pointing out and distinctly claiming the subject matter which the applicant regards as his invention." 35 U.S.C. § 112 ¶ 2. This is known as the "definiteness" requirement, and this Court has consistently held that it "is met only when [patent claims] clearly distinguish what is claimed from what went before in the art and clearly circumscribe what is foreclosed from future enterprise," *United Carbon*, 317 U.S. at 236, "leav[ing] no excuse for ambiguous language or vague descriptions." *Merrill v. Yeomans*, 94 U.S. 568, 573 (1876).

The Federal Circuit holds a different view. It expressly tolerates ambiguous patent claims with multiple reasonable meanings, so long as courts can construe the claim to "inform skilled artisans of the bounds of the claim." Pet. App. 13a (quoting *Star Scientific, Inc. v. R.J. Reynolds Tobacco Co.*, 537 F.3d 1357, 1371 (Fed. Cir. 2008)). In other words, the Federal Circuit has shifted the public-notice function from the patent claim to a court's construction of the claim. Under this view, a "claim is indefinite only when it is 'not amenable to construction' or 'insolubly ambiguous.'" *Id.* (quoting *Datamize, LLC v. Plumtree Software, Inc.*, 417 F.3d 1342, 1347 (Fed. Cir. 2005)).

This case illustrates the lengths to which the Federal Circuit has retreated from the statutory definiteness requirement. The majority construed the claim language at issue in a manner no party sought, based on a supposed

test first described 15 years after the patent issued, and despite four judges reaching three different claim constructions.

This tolerance of ambiguous patent claims has had predictable and regrettable consequences. First, it has invited patent drafters to obfuscate the invention. *See Enzo Biochem, Inc. v. Applera Corp.*, 605 F.3d 1347, 1348 & n.2 (Fed. Cir. 2010) (Plager, J., dissenting from denial of reh'g) (noting that "inherently ambiguous" claim drafting is viewed as "a prized talent"); Robert C. Faber, *Faber on Mechanics of Patent Claim Drafting* 10-3 (6th ed. 2011) (admonishing patent drafters to leave claim language open to multiple interpretations, so as to cover even "competitive products which neither the inventor nor the attorney thought of or could even have imagined at the time"). Second, it has forced courts to "spend a substantial amount of judicial resources trying to make sense of unclear, overbroad, and sometimes incoherent claim terms." *Enzo Biochem.*, 605 F.3d at 1349 (Plager, J., dissenting from denial of reh'g). Third, it has granted patent owners a "zone of uncertainty" into which competitors may enter only at risk of an infringement suit. *See United Carbon*, 317 U.S. at 236.

An August 2013 GAO report to Congress identifies "unclear and overly broad patents" as one of three key factors cited by stakeholders as contributing the recent increase in patent litigation. U.S. Gov't Accountability Office, *Intellectual Property: Assessing Factors That Affect Patent Infringement Litigation Could Help Improve Patent Quality*, GAO-13-465, at 28 (Aug. 2013). "Several diverse stakeholders, including PMEs [patent monetization entities], operating companies, legal

commentators, and judges we interviewed said that many overly broad or vague patent claims do not sufficiently identify the scope of the patent's coverage." *Id.* at 30.

This case presents the important question of whether patent claims must be clear and definite when issued, or only after being construed by a court. This Court should resolve that question.

This case also presents this related question: does the presumption of patent validity dilute the requirement of particular and distinct patent claiming? The Federal Circuit holds that it does: "By embracing this standard, 'we accord respect to the statutory presumption of patent validity, and we protect the inventive contribution of patentees, even when the drafting of their patents has been less than ideal.'" Pet. App. 22a (quoting *Exxon Research & Eng'g Co. v. United States*, 265 F.3d 1371, 1375 (Fed. Cir. 2001)). Members of this Court have indicated otherwise. *See Microsoft Corp. v. i4i Ltd.*, 131 S. Ct. 2238, 2253 (2011) (Breyer, J., concurring) ("Many claims of invalidity rest . . . upon how the law applies to facts as given. . . . Do they show that the patent applicant described his claims properly? § 112. Where . . . patent validity turns on the correct answer to legal questions . . . today's strict standard of proof has no application."). This Court should resolve this question also.

STATEMENT OF THE CASE

This case illustrates the harm caused when courts tolerate ambiguous patent claims. First, the patent applicant obfuscated his alleged invention, in his original patent and in its reexamination in the Patent Office 14

years later. Second, trial court and appellate court judges have struggled to make sense of the claims, with four judges reaching three different interpretations. Third, the patent owner has exploited this "zone of uncertainty" by repeatedly shifting the supposed meaning of these malleable claims to suit its shifting purposes.

The patent-in-suit issued in 1994 describing a heart rate monitor circuit design that had already been described in another patent issued ten years earlier, to Fujisaki, et al., U.S. Patent No. 4,444,200 ("Fujisaki"). The Fujisaki design measured one's heart rate using an internal circuit centered on a "differential amplifier." This differential amplifier allows the circuit to amplify the electrical signals of interest, namely those associated with the user's heartbeat, relative to other signals not of interest, such as signals associated with other muscle activity. The Fujisaki design connected this differential amplifier to two pairs of grip sensors, one pair on each side of a handle bar, connected to the differential amplifier and to ground. This is described in the Abstract of the 1984 Fujisaki prior-art patent (emphases added):

> A heart pulse rate measuring system comprises a casing, a pair of rod-shaped grip sensors extending outwardly from the opposite sides of the casing for sensing a heart pulse signal, and an electric circuit for calculating a heart pulse rate from the sensed heart pulse signal. *Each of the grip sensors is composed of two conductive cylindrical electrodes* arranged in an axially aligned relationship and *electrically insulated from each other* for obtaining a pulse rate utilizing the potentials at four points in a user's

> body. *The electric circuit includes a differential amplifier, having a ground connection to one of the two electrodes of each sensor and two inputs for the remaining electrodes.* A filter is used to eliminate noise from the output of the differential amplifier, and a computer calculates the heart rate from the output of the filter.

An excerpt of a drawing in Fujisaki depicts one pair of its grip-sensor electrodes, 21 and 22, spaced apart by insulating "spacer 24":

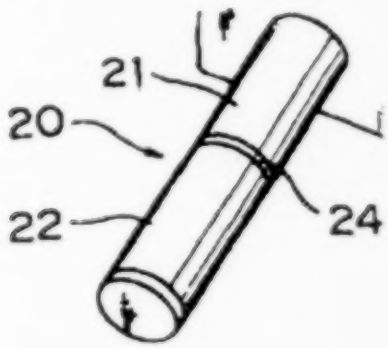

The patent-in-suit, U.S. Patent No. 5,337,753 ("Lekhtman"), describes the same design as Fujisaki. Mr. Gregory Lekhtman filed his patent application in 1992, eight years after Fujisaki issued. Like Fujisaki, Lekhtman uses a differential amplifier. Like Fujisaki, Lekhtman uses a pair of spaced-apart grip sensors on each opposite side of a grip bar. Like Fujisaki, one half of each pair of sensors is wired to the ground and the other half is wired to the differential amplifier. Like Fujisaki, the output of the differential amplifier is fed into a filter circuit to remove noise. Neither the Examiner nor Mr. Lekhtman cited the prior art Fujisaki patent when Mr. Lekhtman's patent application was examined and originally granted.

Some 14 years after the Lekhtman patent was issued, however, it was subjected to a Patent Office Reexamination proceeding in which Fujisaki was cited as prior art. Mr. Lekhtman convinced the Patent Office to reapprove his patent despite Fujisaki. He managed this by focusing on alleged small differences in the spacing between the electrodes in each grip-sensor pair—even though both his and Fujisaki's electrodes were similarly spaced. Specifically, Mr. Lekhtman argued that Fujisaki's spaced-apart electrodes did not have the "spaced relationship" recited in claim 1 of his patent:

> a first live electrode and a first common electrode mounted on said first half *in spaced relationship* with each other;
>
> a second live electrode and a second common electrode mounted on said second half *in spaced relationship* with each other;

Lekhtman at 5:28-33 (emphases added); *see also id.* at 1:53-58.

His patent did not explain the meaning of "spaced relationship." This silence allowed Mr. Lekhtman to cite this undefined claim language to distinguish other spaced-apart grip sensors (electrodes) as well. Specifically, he told the Patent Office that the electrodes in the first and third designs below ("Lekhtman" and "Galiana") have the required "spaced relationship," while the similarly spaced electrodes in the second and fourth designs ("Fujisaki" and "E" Factor) do not.

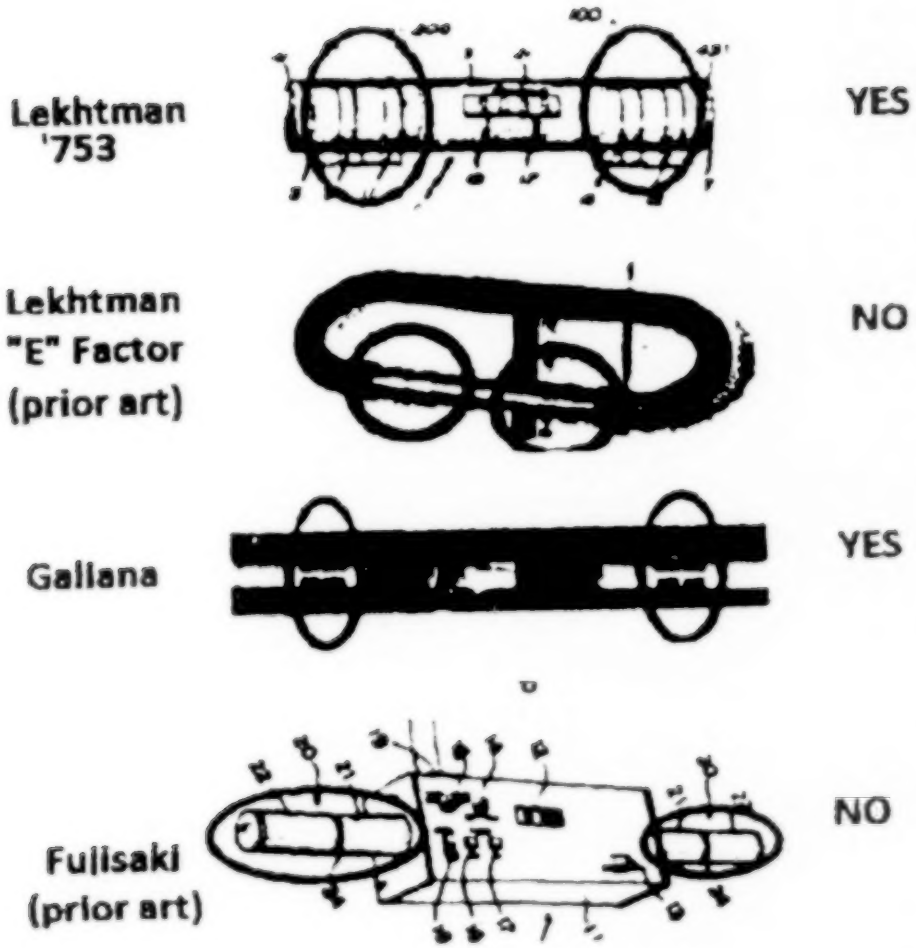

As the above pictures show, it is not readily apparent why two of these supposedly have the claimed "spaced relationship" while two do not.

As explained below, this malleable claim language, "spaced relationship," has undergone multiple metamorphoses.

Patent: Does Not Define "Spaced Relationship": The Lekhtman patent does not define "spaced relationship." Of course, the electrodes need to be close enough so one's hand can grip both halves simultaneously, but not so close that they touch and short the circuit. (Both of these obvious constraints were equally true of Fujisaki, of course.) But, Lekhtman gives no further guidance on this spacing. It gives no example of a particular spacing that is too wide, or too narrow, or just right. Nor does it give any test one might use to determine if a particular spacing qualifies as a "spaced relationship." Nor does it describe any advantages or disadvantages of making the gap narrower or wider. It does not, e.g., suggest that the width of the spacing affects the performance of the differential amplifier. All the Lekhtman patent says about this spacing is that the electrodes are "spaced from" each other. *See* Lekhtman at 2:47-64.

2009 Lekhtman Declaration: Spaced Further Apart Than An Electrode's Width: In 2009, Mr. Lekhtman submitted to the Patent Office a 32-page declaration to try to distinguish Fujisaki. He wrote: "In the [Fujisaki] '200 patent, the space between electrodes is narrower than the width of each electrode, whereas in the [Lekhtman] '753 patent the space between electrodes is wider than the width of each electrode." JA241 ¶ 79.[2] Below is a portion of Figure 5 of the Lekhtman patent showing an inter-electrodes spacing slightly wider than an electrode's width:

2. The JA cites refer to the Joint Appendix filed with the Federal Circuit in Appeal No. 2012-1289.

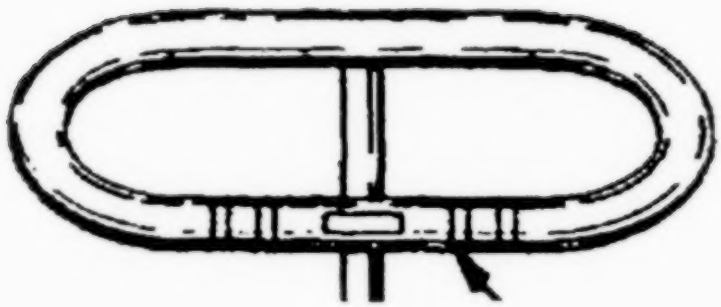

Trial Judge: Indefinite: Based on Mr. Lekhtman's above-quoted representation to the Patent Office, the trial judge tentatively accepted a construction requiring the electrodes' spacing to be greater than each electrode's width: "[T]he spaced relationship arises from trial and error placements of the two electrodes on the cylindrical bar. Once placed, they're in a space[d] relationship. That spaced relationship must be greater than the width of each electrode." JA1391.

But, the Respondent, Biosig Instruments, Inc. ("Biosig" or "Plaintiff"), objected to the trial court adopting what Mr. Lekhtman had told the Patent Office in the above-quoted declaration statement. (Plaintiff's reason was apparent. This wider-than-electrode-width interpretation would defeat Plaintiff's infringement case.) Biosig instead contended that the size, shape, material and spacing of the active electrodes cannot be standardized for all exercise handles. Analyses must be made on a machine-specific basis. *See* JA201. Nothing in the patent suggested anything of the kind. Instead, Plaintiff pointed to other statements in Mr. Lekhtman's 2009 declaration to the Patent Office, and to its expert's report regarding alleged testing of a mock-up of Lekhtman's design (depicted above as "Galiana") and a purported mock-up of the Fujisaki design.

Based on Plaintiff's arguments, the trial court abandoned its tentative construction, and instead construed "spaced relationship" as follows: "[A] defined relationship between the live electrode and the common electrode on one side of the cylindrical bar and the same or a different defined relationship between the live electrode and the common electrode on the other side of the cylindrical bar." Pet. App. 43a-44a.

But, the trial court then found the claim, so construed, indefinite. The trial judge found that the plaintiff's submissions to the Patent Office during reexamination were internally inconsistent and "gibberish." JA1389. "A spaced relationship did not tell me or anyone what precisely the space should be . . . . Not even any parameters as to what the space should be . . . ." Pet. App. 72a.

Federal Circuit Majority: Functional: The panel majority opinion found the disputed claim language amenable to construction and not insolubly ambiguous, and therefore sufficient under Federal Circuit jurisprudence. Other than noting that the electrodes cannot be touching and need to be gripped simultaneously by a hand, the majority did not give a precise construction of the disputed claim language. Instead, it espoused a new "pertaining to the function" interpretation that no party had urged for claim construction in the District Court:

> In summary, the claims provide inherent parameters sufficient for a skilled artisan to understand the bounds of 'spaced relationship.' In addition, a skilled artisan could apply a test and determine the 'spaced relationship' as *pertaining to the function* of substantially

> removing EMG signals. Indeed, the test would have included a standard oscilloscope connected to both the inputs and outputs of the differential amplifier to view the signal wave forms and to measure signal characteristics. With this test, configurations could have been determined by analyzing the differential amplifier input and output signals for detecting EMG and ECG signals and observing the substantial removal of EMG signals from ECG signals while simulating an exercise. These parameters constitute the metes and bounds of 'spaced relationship' as articulated in the '753 patent. Nothing more rigorous is required under § 112, ¶ 2.

Pet. App. 20a (emphasis added).

Thus, the majority opinion construed the claims based primarily on evidence created 15 years after the patent issued, to require a "test" not described in the patent nor in any document contemporaneous to the patent.

Federal Circuit Concurrence: Any Spacing That A Hand Can Bridge: The panel's third judge agreed that the claim language was not "insolubly ambiguous," but would have construed the term more broadly. *See* Pet. App. 29a-32a. Judge Schall would construe "spaced relationship" as any "fixed spatial relationship" that allows both electrodes to be held simultaneously, but not touch. *Id.* at 31a. This combined portions of the trial judge's construction with portions of the majority's construction. But, the concurring judge faulted the majority for allowing a functional limitation elsewhere in the claim to color its

construction of "spaced relationship," even though nothing in the claim linked that functional limitation to the spacing of the electrodes. *Id.* at 31a-32a.

REASONS FOR GRANTING THE PETITION

I. THE FEDERAL CIRCUIT HAS MISINTERPRETED THE STATUTE

Rather than determining whether the "claims particularly point[] out and distinctly claim[]" the invention, as required by the statute, the panel followed Federal Circuit precedent requiring only that "the meaning of the claim is discernible, even though . . . the conclusion may be one over which reasonable persons will disagree." Pet. App. 22a (quoting *Exxon*, 265 F.3d at 1375). More specifically, the Federal Circuit tolerates ambiguous patent claims so long as a court can craft a clear claim construction: "[I]f reasonable efforts at claim construction result in a definition that does not provide sufficient particularity and clarity to inform skilled artisans of the bounds of the claim, the claim is insolubly ambiguous and invalid for indefiniteness." *Id.* at 30a. "[A] construed claim can be indefinite if the construction remains insolubly ambiguous." *Id.* at 13a. In other words, the Federal Circuit has shifted the public-notice function from the issued patent claim to a court's claim construction announced years later or, even, after the patent has expired, as here.

This shift often leads, as it did in this case, to upholding an ambiguous claim despite multiple judges reaching conflicting decisions regarding its scope, and despite those in the art not knowing in advance which of multiple possible constructions a future court will adopt.

A. THE FEDERAL CIRCUIT'S VIEW IS INCOMPATIBLE WITH THIS COURT'S INTERPRETATION

This Court has required clarity in patent claims for over a century. The patent statute "leave[s] no excuse for ambiguous language or vague descriptions," *Merrill*, 94 U.S. at 573. Clarity is required to protect the public. *United Carbon*, 317 U.S. at 236 ("The statutory requirement" is designed to prevent a "zone of uncertainty which . . . would discourage invention."); *Universal Oil Prods. Co. v. Globe Oil & Ref'g Co.*, 322 U.S. 471, 484 (1944) ("The claim is required to be specific for the very purpose of protecting the public against extension of the scope of the patent."); *Gen. Elec. Co. v. Wabash Appliance Corp.*, 304 U.S. 364, 369 (1938) ("The statute seeks to guard against unreasonable advantages to the patentee and disadvantages to others arising from uncertainty as to their rights . . . so that it may be known which features may be safely used or manufactured without a license and which may not." (internal footnote omitted)); *Evans v. Eaton*, 20 U.S. 356, 434 (1822) (explaining that the public must be informed as to what is claimed as the invention to prevent the patentee from "practicing upon the credulity or the fears of other persons, by pretending that his invention is more than what it really is").

Under this Court's case law, it is not too much to ask of an inventor to define the terminology used in a patent application whenever it is open to multiple reasonable interpretations. For example, when the scope of an alleged invention can only be determined through testing, it is not too much to ask that the inventor describe those tests,

precisely, in the patent application, or cite to industry standards or other publications describing those tests.

Indeed, failure to demand such clarity from inventors undermines the delicate balance on which our Patent System depends:

> The patent laws "promote the Progress of Science and useful Arts" by rewarding innovation with a temporary monopoly. U.S. Const., Art. I, § 8, cl. 8. The monopoly is a property right; and like any property right, its boundaries should be clear. *This clarity is essential to promote progress, because it enables efficient investment in innovation.* A patent holder should know what he owns, and the public should know what he does not. For this reason, the patent laws require inventors to describe their work in "full, clear, concise, and exact terms," 35 U. S. C. § 112, as part of the delicate balance the law attempts to maintain between inventors, who rely on the promise of the law to bring the invention forth, and the public, which should be encouraged to pursue innovations, creations, and new ideas beyond the inventor's exclusive rights.

Festo Corp. v. Shoketsu Kinzoku Kogyo Kabushiki Co., 535 U.S. 722, 730-31 (2002) (emphasis added).

In contrast, under Federal Circuit precedent, "the definiteness of claim terms depends on whether those terms can be given *any reasonable meaning*." *Datamize*, 417 F.3d at 1347 (emphasis added). This standard invites applicants to obscure the claimed invention, such that

the public is "deprived of rights supposed to belong to it, without being clearly told what it is that limits these rights." *Merrill*, 94 U.S. at 573. Why define an invention precisely in a patent application if the courts will allow you years later to explain what was meant, with the accused product in front of you? Why define precisely how a desired result is achieved if the courts will allow your claims to cover whatever works to achieve the desired result?

The "insoluble ambiguity" standard represents yet another significant divergence between Supreme Court and Federal Circuit precedent, and this case presents an opportunity to resolve the error. *See, e.g.*, *Bilski v. Kappos*, 130 S. Ct. 3218, 3231 (2010) ("[T]he Court once again declines to impose limitations on the Patent Act that are inconsistent with the Act's text."); *KSR Int'l Co. v. Teleflex Inc.*, 550 U.S. 398, 427-28 (2007) ("[T]he Court of Appeals analyzed the issue in a narrow, rigid manner inconsistent with § 103 and our precedents.").

The current Patent Office rules do not tolerate ambiguity. *See Supplementary Examination Guidelines for Determining Compliance With 35 U.S.C. 112 and for Treatment of Related Issues in Patent Applications*, 76 Fed. Reg. 7162, 7164 (2011) ("[I]f the language of a claim . . . is such that a person of ordinary skill in the relevant art would read it with more than one reasonable interpretation, then a rejection under § 112, ¶ 2 is appropriate."); *see also Ex Parte Miyazaki*, No. 2007-3300, 2008 WL 5105055 (B.P.A.I. Nov. 19, 2008). It is time for this Court "to support the PTO in requiring that the walls surrounding the claimed invention be made of something other than quicksand." *Enzo Biochem*, 605 F.3d at 1349 (Plager, J., dissenting from denial of reh'g).

B. THE PRESUMPTION OF VALIDITY DOES NOT DILUTE THE STATUTORY REQUIREMENT FOR DEFINITE CLAIMS

The Federal Circuit has justified its permissive stance by referring to the statutory presumption of validity. "By embracing this standard, 'we accord respect to the statutory presumption of patent validity, and we protect the inventive contribution of patentees, even when the drafting of their patents has been less than ideal.'" Pet. App. 22a (quoting *Exxon*, 265 F.3d at 1375). The statute and Supreme Court provide no such safety net. *See, e.g.*, *Merrill*, 94 U.S. at 573-74 ("It seems to us that nothing can be more just and fair, both to the patentee and to the public, than that the former should understand, and correctly describe, just what he has invented, and for what he claims a patent.").

The Federal Circuit panel defended its approach as protecting patentees. But, that is *not* the primary purpose of the particular and distinct claiming requirement. As this Court explained in *Festo*, the public must know what the patent does not cover so that it can pursue innovations, creations, and new ideas beyond the inventor's exclusive rights. *Festo*, 535 U.S. at 731. The Federal Circuit's approach defeats this policy by encouraging ambiguous claims so long as they eventually can be clarified in claim construction.

Additionally, particular and distinct claiming is a question of law that does not turn on underlying factual disputes. *Exxon*, 265 F.3d at 1376. The statutory presumption of validity has no application beyond assigning to challengers the burden of pleading and establishing

the defense. It does not dilute Section 112's particular and distinct claiming requirement. *See Microsoft*, 131 S. Ct. at 2253 (Breyer, J., concurring) ("[T]he evidentiary standard of proof applies to questions of fact and not to questions of law. . . . Where the ultimate question of patent validity turns on the correct answer to legal questions . . . today's strict standard of [clear and convincing] proof has no application.").

C. THE FEDERAL CIRCUIT IMPROPERLY ALLOWS VAGUE CLAIMS TO BE CURED BY CLAIM CONSTRUCTION

The "insolubly ambiguous" standard analyzes the definiteness of judicially-crafted claim *constructions*, rather than the claims. This is improper. Section 112 requires more than asking "if a person of ordinary skill in the art can come up with a plausible meaning for a disputed claim term." *Enzo Biochem*, 605 F.3d at 1348 (Plager, J., dissenting from denial of reh'g).

As an initial matter, the purpose of claim construction is to articulate in lay terms the understanding of those skilled in the art. But, the Federal Circuit has turned to claim construction to explain to those skilled in the art what the claims mean. *See* Pet. App. 30a (Claims will be held indefinite "if reasonable efforts at claim construction result in a definition that does not provide sufficient particularity and clarity *to inform skilled artisans of the bounds of the claim.*" (quoting *Star Scientific*, 537 F.3d at 1371) (emphasis added)); *see also id.* at 13a ("[A] construed claim can be indefinite if the construction remains insolubly ambiguous . . . ." (quoting *Star Scientific, Inc. v. R.J. Reynolds Tobacco Co.*, 655 F.3d 1364, 1373 (Fed.

Cir. 2011))). In other words, where the statute requires the patent *claims* to particularly point out and distinctly claim the invention, the Federal Circuit instead requires this clarity only of the claim's *construction*.

Analyzing claim constructions, not claims, for particularity and distinctness, means that the public cannot know the scope of ambiguous claims until the courts have definitively construed them. *See Enzo Biochem*, 605 F.3d at 1348 (Plager, J., dissenting from denial of reh'g) ("[I]t is not until three court of appeals judges randomly selected for that purpose pick the 'right' interpretation that the public, not to mention the patentee and its competitors, know what the patent actually claims."). That may not happen after the patent has expired, as here. And rarely will that happen before the public has been forced to make investment decisions that may or may not be impacted by the patent.

D. A SECOND CIRCUIT RULING EXEMPLIFIES THE FEDERAL CIRCUIT'S ERROR

The Federal Circuit's retreat from requiring clarity in claims is illustrated by comparing this case to pre-Federal Circuit opinions, such as *Norton Co. v. Bendix Corp.*, 449 F.2d 553 (2d Cir. 1971), which found indefinite similar claim terms. In *Norton*, the Second Circuit invalidated a claim related to a vacuum pump, reciting in part, "a guard ring surrounding the nozzle in *closely spaced* relation to the lip . . . extending in the direction of the jet a *substantial distance* beyond said lip . . . with the result that undesirable constituents of the vapour jet are removed almost completely." *Id.* at 554. The court noted that "there were several commercial compositions falling

within the peripheral area of uncertainty" created by the italicized limitations, and relied on *United Carbon* in carrying out its "duty to invalidate the claims." *Id.* at 557. This ambiguity was particularly problematic "where, as here, great emphasis is placed by the plaintiffs themselves on the language used as distinguishing the invention from the prior art." *Id.* And the plaintiffs' witnesses themselves testified inconsistently, including the inventor, who declined to identify specific measurable distances, stating instead that "[t]he guard ring has a function *and the description of the guard ring relates to this function.*" *Id.* at 556 (emphasis in original). The court also cited this Court's opinion in *General Electric*, which cautions against the "vice" of "us[ing] conveniently functional language at the exact point of novelty." 304 U.S. at 371.

The facts of *Norton* are strikingly similar to this case. As described above, Biosig attempted to distinguish the Fujisaki prior art and E-factor prior art based on the "spaced relationship" term; the named inventor submitted contradictory statements regarding the bounds of the "spaced relationship" to the Patent Office; and Biosig ultimately sought to limit the term based on an allegedly novel result (a substantially zero EMG signal) without any novel structure. The two decisions are irreconcilable.

II. THIS ERROR HAS DAMAGED OUR PATENT SYSTEM

This case is a stark illustration of the problems wrought by the Federal Circuit's misinterpretation of the statute. The patent issued in 1994 was treated, in effect, as a blank check whose scope could be filled in 15 years later and backdated to 1994. But, the impact of

the "insolubly ambiguous" standard extends far beyond this case. "Unclear patent boundaries create many of the problems of the patent system," including the expense of unnecessary judicial resources to resolve the ambiguities. Christopher A. Cotropia, *The Folly of Early Filing in Patent Law*, 61 Hastings L.J. 65, 118 (2009).

The current Administration has very recently and specifically expressed concern regarding vague and overbroad patents. In June, the Administration, recognizing concerns regarding, among other things, "patents with overly broad claims," called for new "strategies to improve claim clarity" and targeted training at the PTO regarding "scrutiny of functional claims." *See* White House, *FACT SHEET: White House Task Force on High-Tech Patent Issues* (June 4, 2013). A report issued by the White House on the same day emphasized the importance of clarity in patent claims "to enable skilled practitioners in the relevant field to understand" the alleged invention. *See* Executive Office of the President, *Patent Assertion and U.S. Innovation*, at 7 (June 4, 2013). The report expressed concern regarding patent-litigation abuse involving "patents whose claim boundaries are unclear" as well as "very broad and/or vague claims." *Id.* at 4, 7-8. The report particularly criticized the prevalence of "functional claiming," whereby—as the majority found in this case—a feature is claimed for "what it does rather than what it is." *Id.* at 8 & n.4 (citing *In re Schreiber*, 128 F.3d 1473, 1478 (Fed. Cir. 1997)).

Similarly, the Federal Trade Commission ("FTC") recently urged courts to "focus on indefiniteness to address functional claiming in general, in order to ensure disclosure of what is within and what is outside of the patent." Federal Trade Comm'n, *The Evolving IP*

Marketplace: Aligning Patent Notice and Remedies with Competition 102 (2011); *see also id.* at 95 & nn.140-43 (recognizing that the Federal Circuit has "shifted focus" by crafting a test for indefiniteness based on whether claims are "amenable to construction, however difficult that task may be" (quoting *Exxon*, 265 F.3d at 1375)). The FTC specifically noted that the Federal Circuit's insolubly ambiguous standard "accepts substantial ambiguity," "overstates what third parties making marketplace decisions are likely to understand," and "provides little notice of scope" when claims have more than one reasonable meaning. *Id.* at 99.

III. THIS CASE IS THE IDEAL VEHICLE THAT *APPLERA* WAS NOT

This Court has recently indicated a specific interest in the particular and distinct claiming requirement at issue in this case. In *Applera Corp. v. Enzo Biochem, Inc.*, No. 10-426, 131 S. Ct. 847 (Dec. 13, 2010) (Mem.), which presented the question of "[w]hether the Federal Circuit's standard for definiteness is consistent with the language of § 112," the Court invited the views of the Solicitor General. *See id.*; Brief for the United States as Amicus Curiae, *Applera*, No. 10-426 (May 17, 2011) ("*Applera* U.S. Amicus Br."). The government admitted that the Federal Circuit "may on occasion have" departed from the proper standard in certain cases by "conducting a definiteness inquiry that in substance was insufficiently rigorous." *Applera* U.S. Amicus Br. at 15. But the government nevertheless urged that *Applera* was a poor vehicle for plenary review of that standard. *Id.* at 16; *see also Applera Corp. v. Enzo Biochem, Inc.*, 131 S. Ct. 3020 (2011) (denying certiorari).

None of the vehicle problems identified by the government in *Applera* is present here.

Unlike the "highly technical" questions related to nucleic acid probes that concerned the government in *Applera*, *see Applera* U.S. Amicus Br. at 15-16, this case concerns the spacing between two visible items. The government also opposed certiorari in *Applera* because the Federal Circuit had not invoked the "insolubly ambiguous" standard in the panel opinion. *Id.* at 15. Here, the standard was expressly invoked. *See* Pet. App. 13a ("A claim is indefinite only when it is 'not amenable to construction' or 'insolubly ambiguous.'" (quoting *Datamize*, 417 F.3d at 1347)). And while the government argued that the Federal Circuit has at times used the "insolubly ambiguous" language as a "shorthand reference" to the correct Supreme Court standard, which requires that a skilled artisan be able to discern the boundaries of the claim, *Applera* U.S. Amicus Br. at 12, 14, the same cannot be said of this case. Here, the panel explicitly stated the conflicting standard under which it reversed the district court: "If the meaning of the claim is discernible, even though the task may be formidable and the conclusion may be one over which reasonable persons will disagree, we have held the claim sufficiently clear to avoid invalidity on indefiniteness grounds." Pet. App. 22a (quoting *Exxon*, 265 F.3d at 1375); *see also id.* ("accord[ing] respect to the statutory presumption of patent validity" (quoting *Exxon*, 265 F.3d at 1375)).

The majority applied this permissive standard to uphold a key but ambiguous claim term despite multiple judges reaching conflicting decisions regarding its scope. The majority relied on a declaration submitted by the named inventor 15 years after the issuance of the patent—

as well as extrinsic evidence generated in the course of litigation—to redefine the "metes and bounds of 'spaced relationship'" and find it definite. *See* Pet. App. 20a-21a. The majority construed the claim language in light of a supposed test that is not mentioned in the patent or in any document of record in existence within a decade of the patent's issuance.

Moreover, this case is a poster child for the type of abuse invited by the Federal Circuit standard. In arguing against a narrow claim construction, Biosig convinced the district court to ignore the named inventor's declaration that "any knowledgeable person in the field" would know that a particular prior art reference fell outside the scope of the claimed "spaced relationship" simply "[u]pon seeing the figures," JA233, because "the space between electrodes is narrower than the width of each electrode," JA241. Biosig convinced the trial judge to adopt a broad construction because the declaration was—in his words—"inherently contradictory." JA1388. Biosig then convinced a majority of the appellate panel to rely on the *same ambiguous declaration* to cure indefiniteness.

The Federal Circuit's tacit approval of patent owners exploiting ambiguous (but not "insolubly ambiguous") claim language at the expense of competitors and the public amounts to an endorsement of the very "zone of uncertainty" prohibited by the Supreme Court. *See United Carbon*, 317 U.S. at 236.

Finally, this case also allows the Court to correct the Federal Circuit's mis-application of the presumption of validity to dilute the particular and distinct claiming requirement.

APPENDIX A — ORDER OF THE UNITED STATES COURT OF APPEALS FOR THE FEDERAL CIRCUIT, FILED JUNE 28, 2013

UNITED STATES COURT OF APPEALS
FOR THE FEDERAL CIRCUIT

2012-1289

BIOSIG INSTRUMENTS, INC.,

Plaintiff-Appellant,

v.

NAUTILUS, INC.,

Defendant-Appellee.

Appeal from the United States District Court for the Southern District of New York in case no. 10-CV-7722, Judge Alvin K. Hellerstein.

ORDER

A petition for rehearing en banc having been filed by the Appellee, and the matter having first been referred as a petition for rehearing to the panel that heard the appeal, and thereafter the petition for rehearing en banc having been referred to the circuit judges who are in regular active service,

UPON CONSIDERATION THEREOF, it is

Appendix A

ORDERED that the petition for rehearing be, and the same hereby is, DENIED and it is further

ORDERED that the petition for rehearing en banc be, and the same hereby is, DENIED.

The mandate of the court will issue on July 5, 2013.

FOR THE COURT

/s/_____
Daniel E. O'Toole
Clerk

Dated: 6/28/2013

APPENDIX B — OPINION OF THE UNITED STATES COURT OF APPEALS FOR THE FEDERAL CIRCUIT, FILED APRIL 26, 2013

UNITED STATES COURT OF APPEALS
FOR THE FEDERAL CIRCUIT

2012-1289

BIOSIG INSTRUMENTS, INC.,

Plaintiff-Appellant,

v.

NAUTILUS, INC.,

Defendant-Appellee.

April 26, 2013, Decided

Appeal from the United States District Court for the Southern District of New York in No. 10-CV-7722, Judge Alvin K. Hellerstein.

Before NEWMAN, SCHALL, and WALLACH, *Circuit Judges.*

Opinion for the court filed by *Circuit Judge* WALLACH.
Concurring opinion filed by *Circuit Judge* SCHALL.

WALLACH, *Circuit Judge.*

Appendix B

Biosig Instruments, Inc. ("Biosig") is the assignee of U.S. Patent No. 5,337,753 ("the '753 patent"), which is directed to a heart rate monitor associated with an exercise apparatus and/or exercise procedures. Biosig brought a patent infringement action against Nautilus, Inc. ("Nautilus") in district court alleging that Nautilus infringed claims 1 and 11 of the '753 patent. After claim construction, Nautilus filed a motion for summary judgment seeking, in relevant portion, to have the '753 patentheld invalid for indefiniteness. The district court granted Nautilus's motion, and Biosig appealed. Because the claims at issue are not invalid for indefiniteness, the district court's decision is reversed and remanded for further proceedings.

Background

I.

The '753 patent is directed to a heart rate monitor that purports to improve upon the prior art by effectively eliminating noise signals during the process of detecting a user's heart rate. '753 patent col. 1 ll. 5-10. According to the patent, prior art monitors did not eliminate signals given off by skeletal muscles ("electromyogram" or "EMG" signals), which are brought about when users move their arms or squeeze the monitor with their fingers. *Id.* col. 1 ll. 19-22. Because EMG signals are of the same frequency range as electrical signals generated by the heart ("electrocardiograph" or "ECG" signals), EMG signals can mask ECG signals rendering heart rate determination while exercising difficult. *Id.* col. 1 ll. 22-25.

Appendix B

The '753 patent discloses an apparatus preferably mounted on exercise equipment that measures heart rates by, *inter alia*, processing ECG signals from which EMG signals are substantially removed. *Id.* col. 1. ll. 36-41. The claimed heart rate monitor consists of an elongate hollow cylindrical member that houses electronic circuitry as illustrated below:

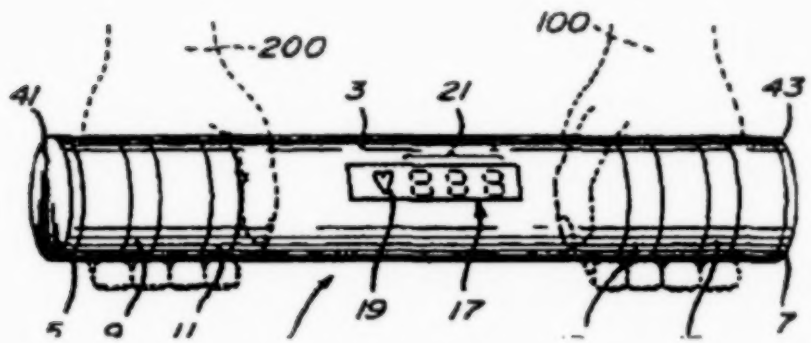

'753 patent fig. 1. A user's left and right hands—100 and 200—each contact one of the "live" electrodes—9 and 13—and one of the "common" electrodes—11 and 15—on either end of the cylindrical member 3. *Id.* col. 2 ll. 50-64, col. 3 ll. 26-31. The electronic circuitry includes a difference amplifier 23, which is connected to the live electrodes 9 and 13. *Id.* col. 3 ll. 7-10. The common electrodes 11 and 15 are connected to each other and to a point of common potential, for example, a common ground. *Id.* col. 3 ll. 5-7. An illustration of the circuitry is shown below:

Appendix B

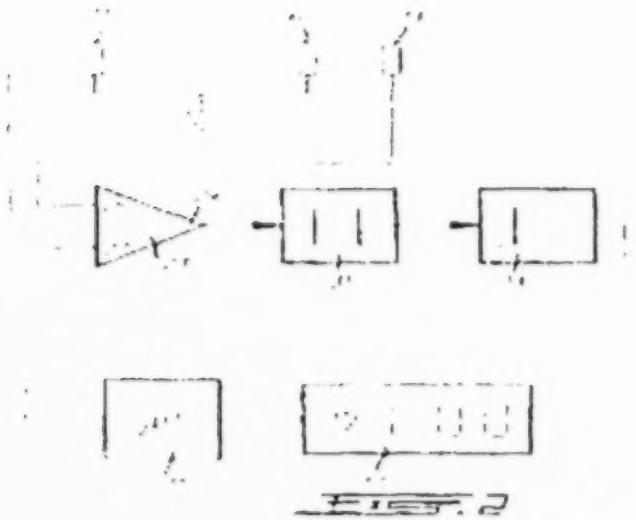

'753 patent fig. 2. Inputs 25 and 27 are of opposite polarity. *Id.* col. 3 ll. 10-13. As the EMG signals and other noise signals are of substantially equal amplitude and phase, they cancel each other out in the difference amplifier to provide a substantially zero output of EMG and other noise signals. *Id.* col. 3 ll. 33-43. In contrast, ECG signals, being of opposite phase, will be added and therefore further amplified in the difference amplifier so that the output of the difference amplifier is substantially due to the ECG signals only. *Id.* col. 3 ll. 44-50.

Claim 1 is representative and recites, in relevant part:

1. A heart rate monitor for use by a user in association with exercise apparatus and/or exercise procedures, comprising:

   an elongate member;

> electronic circuitry including a difference amplifier having a first input terminal of a first polarity and a second input terminal of a second polarity opposite to said first polarity;
>
> said elongate member comprising a first half and a second half;
>
> a first live electrode and a first common electrode mounted on said first half in *spaced relationship* with each other;
>
> a second live electrode and a second common electrode mounted on said second half in *spaced relationship* with each other;
>
> said first and second common electrodes being connected to each other and to a point of common potential . . . .

'753 patent col. 5 ll. 17-36 (emphases added). In addition to the capability of substantially removing EMG signals, claim 1 recites a monitor, a means for measuring time intervals between heart pulses, and a means for calculating the heart rate of a user using the measured time intervals. *See id.* col. 5 l. 37-col. 6 l. 15.

Asserted—dependent claim 11 further specifies that the claimed "elongate member" is "mounted on an exercise apparatus." *Id.* col. 7 ll. 17-20. Figures 7 and 8 are illustrative of a heart rate monitor mounted on a bicycle and a stair-climbing exercise machine:

Appendix B

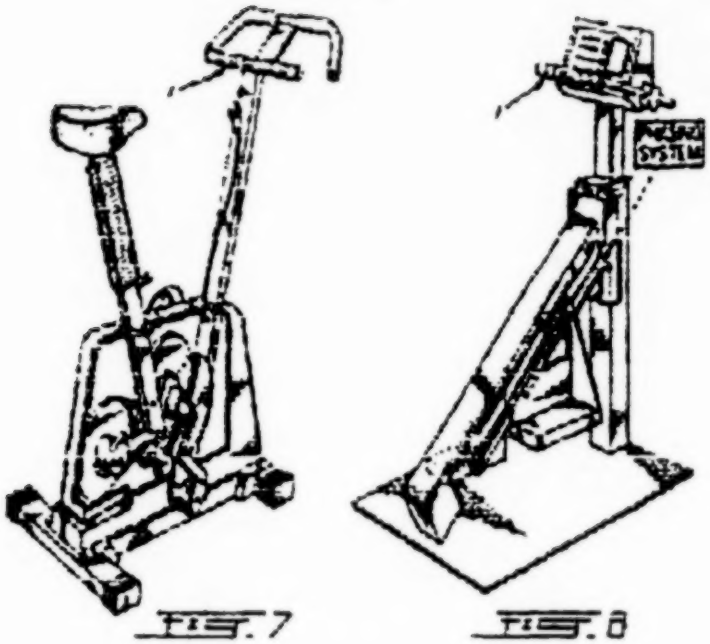

Id. figs. 7-8.

II.

The dispute between the parties has been ongoing for years, stemming from the late 1990s when Biosig was in discussions with Nautilus's predecessor Stairmaster Company regarding Biosig's patented technology. Despite these discussions, Stairmaster Company, and later Nautilus, began selling exercise equipment that Biosig alleges infringes its patented technology. These accused products consist of heart rate monitors mounted on exercise equipment.

Biosig sued Nautilus for infringing the '753 patent in August 2004 ("2004 Action"). During the pendency of that

litigation, Nautilus twice sought *ex parte* reexamination of the '753 patent from the United States Patent and Trademark Office ("PTO"). The first reexamination request was based primarily on U.S. Patent No. 4,444,200 ("Fujisaki").[1] The PTO granted Nautilus's request, and in April 2009, the PTO issued an office action rejecting, *inter alia*, claim 1 as anticipated by Fujisaki and claim 11 as obvious over Fujisaki in view of other prior art references. After Biosig filed its response to this PTO office action, Nautilus requested a second reexamination of the '753 patent, again, citing Fujisaki as the primary reference. The PTO granted Nautilus's second request for reexamination, and the two reexamination proceedings were consolidated in December 2009. The PTO ultimately concluded these reexamination proceedings in June 2010 and confirmed the patentability of the '753 patent without amendment. During the pendency of this reexamination proceeding, the parties voluntarily dismissed without prejudice the claims and counterclaims of the 2004 Action.

Upon conclusion of the reexamination proceeding, Biosig re-instituted a patent infringement action against

---

1. Fujisaki relates to a system for measuring heart pulse rate, and more particularly, to "a heart pulse rate measuring system having a pair of grip sensors adapted to be gripped with both hands for sensing heart pulse signals." Fujisaki, col. 1 ll. 5-9. "Each of the grip sensors is composed of two conductive cylindrical electrodes arranged in an axially aligned relationship and electrically insulated from each other." *Id.* col 1 ll. 45-48. "The electric circuit includes a differential amplifier having inputs from the grip sensors for amplifying the difference between the heart pulse signals . . . ." *Id.* col. 1 ll. 48-51.

Nautilus on October 8, 2010. On August 11, 2011, the district court conducted a *Markman* hearing, and on September 29, 2011, issued its order construing certain disputed claim terms.[2] On November 10, 2011, Nautilus moved under Federal Rule of Civil Procedure 56 seeking summary judgment on two issues: infringement and invalidity for indefiniteness.

On February 22, 2012, the district court held a hearing on Nautilus's motion for summary judgment. As to the issue of infringement, the district court denied Nautilus's motion as premature because the parties had yet to undertake significant discovery. Summ. J. Hr'g Tr.

---

2. Even though the district court issued a claim construction order, which included a construction of the disputed term, "spaced relationship," the record reflects the district court nonetheless determined that "space relationship" was ambiguous, and therefore, found Biosig's contentions pertaining to this term unpersuasive. J.A. 1391:15-21 (August 11, 2011 *Markman* Hearing) ("And we are going on to say, the spaced relationship arises from trial and error placements of the two electrodes on the cylindrical bar. Once placed they're in a space relationship. That spaced relationship must be greater than the width of each electrode. *What I've done will confuse the jury and it may set up Mr. Milcetic for a ruling of invalidity. Fair warning.*") (emphasis added); J.A. 2819:16-2820:1 (February 22, 2012 Summary Judgment Hearing) ("THE COURT: *So he said a space[d] relationship can be anything. It could be this or it could be something else.* MR. GERINGER: And, your Honor, at the time, it was Mr. Bonella's colleague, I believe, Mr. Milcetic, but *your Honor warned them that you didn't want them to fall into a trap.* THE COURT: Right. MR. GERINGER: That *construing it in a way that embraces ambiguity could lead to invalidity through vagueness.* THE COURT: And now you're trying to take advantage of that right now.") (emphases added).

5:23-6:2, *Biosig Instruments, Inc. v. Nautilus, Inc.*, No. 10-CV-7722 (S.D.N.Y. Feb. 22, 2012), ECF No. 58 ("Summ. J. Hr'g Tr."). On invalidity, the district court granted Nautilus's motion, holding that the '753 patent's "spaced relationship" term as recited in claim 1 was indefinite as a matter of law. Summ. J. Hr'g Tr. 51:21-52:1.

After the parties completed summary judgment briefing but before the hearing, Nautilus filed a third request for reexamination of the '753 patent on January 25, 2012, and again, Nautilus cited Fujisaki as a primary prior art reference. This time, on February 17, 2012, the PTO denied Nautilus's request, finding that there were no substantial new questions of patentability raised by the request. Biosig was notified of the PTO's denial of Nautilus's third reexamination request after the district court's summary judgment hearing and decision. In light of this new fact, Biosig moved for reconsideration of the district court's decision granting Nautilus's motion for summary judgment of invalidity, which the district court denied on June 12, 2012. Biosig timely appeals. We have jurisdiction pursuant to 28 U.S.C. § 1295(a)(1).

Discussion

I.

This court reviews the district court's grant or denial of motions for summary judgment under the law of the regional circuit. *MicroStrategy Inc. v. Bus. Objects, S.A.*, 429 F.3d 1344, 1349 (Fed. Cir. 2005). The Second Circuit reviews *de novo* a district court's grant of a motion for

summary judgment. *Kuebel v. Black & Decker Inc.*, 643 F.3d 352, 358 (2d Cir. 2011). Summary judgment motions may be granted only where "there is no genuine dispute as to any material fact and the movant is entitled to judgment as a matter of law." Fed. R. Civ. P. 56(a). In making this determination, a court must "draw all reasonable inferences in favor of the nonmoving party, and it may not make credibility determinations or weigh the evidence." *Reeves v. Sanderson Plumbing Prods., Inc.*, 530 U.S. 133, 150, 120 S. Ct. 2097, 147 L. Ed. 2d 105 (2000).

II.

The sole issue presented to this court is whether the district court erred in holding that the asserted claims of the '753 patent is invalid for indefiniteness as a matter of law. In particular, the district court held that "spaced relationship" as recited in claim 1 and referring to the spacing between the common and live electrodes was not distinctly and particularly claimed in the patent in violation of 35 U.S.C. § 112, ¶ 2.[3]

Indefiniteness is a legal issue this court reviews without deference. *Star Scientific, Inc. v. R.J. Reynolds Tobacco Co.*, 655 F.3d 1364, 1373 (Fed. Cir. 2011) ("*Star Scientific II*"). Section 112, ¶ 2, requires that the specification of a patent "conclude with one or more

3. Paragraph 2 of 35 U.S.C. § 112 was replaced with newly designated § 112(b) when § 4(c) of the Leahy-Smith America Invents Act ("AIA"), Pub. L. No. 112-29, took effect on September 16, 2012. Nevertheless, the pre-AIA version of § 112 applies because the '753 patent issued prior to that date.

claims particularly pointing out and distinctly claiming the subject matter which the applicant regards as his invention." "Because claims delineate the patentee's right to exclude, the patent statute requires that the scope of the claims be sufficiently definite to inform the public of the bounds of the protected invention, *i.e.*, what subject matter is covered by the exclusive rights of the patent." *Halliburton Energy Servs., Inc. v. M-I LLC*, 514 F.3d 1244, 1249 (Fed. Cir. 2008).

A claim is indefinite only when it is "not amenable to construction" or "insolubly ambiguous." *Datamize, LLC v. Plumtree Software, Inc.*, 417 F.3d 1342, 1347 (Fed. Cir. 2005) (internal quotations and citations omitted). "In and of itself, a reduction of the meaning of a claim term into words is not dispositive of whether the term is definite . . . . And if reasonable efforts at claim construction result in a definition that does not provide sufficient particularity and clarity to inform skilled artisans of the bounds of the claim, the claim is insolubly ambiguous and invalid for indefiniteness." *Star Scientific, Inc. v. R.J. Reynolds Tobacco Co.*, 537 F.3d 1357, 1371 (Fed. Cir. 2008) ("*Star Scientific I*") (citations omitted). "Thus, a construed claim can be indefinite if the construction remains insolubly ambiguous . . . ." *Star Scientific II*, 655 F.3d at 1373; see *also Exxon Research & Eng'g Co. v. United States*, 265 F.3d 1371, 1377-79 (Fed. Cir. 2001) (accepting the district court's claim construction and separately undertaking an analysis of the claims at issue to determine indefiniteness); *Union Pac. Res. Co. v. Chesapeake Energy Corp.*, 236 F.3d 684, 689-90, 692 (Fed. Cir. 2001) (same); *Minn. Min. and Mfg. Co. v. Johnson & Johnson Orthopaedics, Inc.*, 976 F.2d 1559, 1567 (Fed. Cir. 1992) (same).

Appendix B

General principles of claim construction apply when determining indefiniteness. *Enzo Biochem, Inc. v. Applera Corp.*, 599 F.3d 1325, 1332-33 (Fed. Cir. 2010). We therefore primarily consider the intrinsic evidence consisting of the claim language, the specification, and the prosecution history. *Id.* In addition, similar to claim construction, courts may consider certain extrinsic evidence in resolving disputes regarding indefiniteness. *Exxon Research & Eng'g Co.*, 265 F.3d at 1376 (citing *Cybor Corp. v. FAS Techs., Inc.*, 138 F.3d 1448, 1454 (Fed. Cir. 1998) (en banc)); *see also Verve, LLC v. Crane Cams, Inc.*, 311 F.3d 1116, 1119-20 (Fed. Cir. 2002) (recognizing that guidance as to measurement of a term of degree can come from the intrinsic record or from the knowledge of a person of ordinary skill in the art); *Bancorp Servs., L.L.C. v. Hartford Life Ins. Co.*, 359 F.3d 1367, 1375-76 (Fed. Cir. 2004) (finding evidence not publicly available at the time of the invention may nonetheless be probative to show that the term was in use and had a discernible meaning to at least some persons practicing in the field). In doing so, the court is not weighing evidence or making factual findings, but rather, looking to extrinsic evidence as part of the normal course of engaging in construction of the patent. *Exxon*, 265 F.3d at 1376 (citing *Cybor*, 138 F.3d at 1454).

When a "word of degree" is used, the court must determine whether the patent provides "some standard for measuring that degree." *Seattle Box Co., Inc. v. Indus. Crating & Packing, Inc.*, 731 F.2d 818, 826 (Fed. Cir. 1984). Similarly, when a claim limitation is defined in "purely functional terms," a determination of whether

the limitation is sufficiently definite is "highly dependent on context (*e.g.*, the disclosure in the specification and the knowledge of a person of ordinary skill in the relevant art . . .)." *Halliburton*, 514 F.3d at 1255.

III.

The disputed term "spaced relationship" does not suffer from indefiniteness. Because the term was amenable to construction, indefiniteness here would require a showing that a person of ordinary skill would find "spaced relationship" to be insolubly ambiguous—that it fails to provide sufficient clarity delineating the bounds of the claim to one skilled in the art. In this case, a skilled artisan would find such boundaries provided in the intrinsic evidence.

The district court construed "spaced relationship" to mean that "there is a defined relationship between the live electrode and the common electrode on one side of the cylindrical bar and the same or a different defined relationship between the live electrode and the common electrode on the other side of the cylindrical bar." Summ. J. Hr'g Tr. 10:16-22. Notwithstanding that this disputed term was amenable to construction, the district court determined that the term was indefinite. Specifically, the district court stated that "a spaced relationship did not tell me or anyone what precisely the space should be . . . . Not even any parameters as to what the space should be . . . . Nor whether the spaced relationship on the left side should be the same as the spaced relationship on the right side." Summ. J. Hr'g Tr. 23:3-11.

Appendix B

Turning to the intrinsic evidence, the district court is correct that the specification of the '753 patent does not specifically define "spaced relationship" with actual parameters, *e.g.*, that the space between the live and common electrodes is one inch. Nevertheless, the '753 patent's claim language, specification, and the figures illustrating the "spaced relationship" between the live and common electrodes are telling and provide sufficient clarity to skilled artisans as to the bounds of this disputed term. For example, on the one hand, the distance between the live electrode and the common electrode cannot be greater than the width of a user's hands because claim 1 requires the live and common electrodes to independently detect electrical signals at two distinct points of a hand. On the other hand, it is not feasible that the distance between the live and common electrodes be infinitesimally small, effectively merging the live and common electrodes into a single electrode with one detection point. *See* '753 patent col. 3 ll. 26-31 (describing how each hand is placed over the live and common electrodes so that they are "in physical and electrical contact with both electrodes."). Thus, the '753 patent discloses certain inherent parameters of the claimed apparatus, which to a skilled artisan may be sufficient to understand the metes and bounds of "spaced relationship."

The functionality of the claimed heart rate monitor as recited in claim 1, described in the specification, and which provided the basis for overcoming the PTO's office action rejections during the reexamination, sheds further light on the meaning of "spaced relationship." Specifically, claim 1 provides, in part:

> whereby, a first electromyogram signal will be detected between said first live electrode and said first common electrode, and a second electromyogram signal, of substantially equal magnitude,and phase to said first electromyogram signal will be detected between said second live electrode and said second common electrode; so that, when said first electromyogram signal is applied to said first terminal and said second electromyogram signal is applied to said second terminal, the first and second electromyogram signals will be subtracted from each other to produce a substantially zero electromyogram signal at the output of said difference amplifier . . . .

'753 patent col. 5 ll. 48-61. This "whereby" clause describes the function of substantially removing EMG signals that necessarily follows from the previously recited structure consisting of the elongate member, the live electrode, and the common electrode. *Id.* col. 5 ll. 42-47. Importantly, the EMG signal is detected between the live and common electrodes, which are in "spaced relationship" with each other. Even more significantly, the PTO examiner found this function to be "crucial" as a reason for overcoming the cited prior art and confirming the patentability of the asserted claims upon reexamination. J.A. 139-46. Thus, the recitation of this function in claim 1 is highly relevant in ascertaining the proper bounds of the "spaced relationship" between the live and common electrodes. *See Hoffer v. Microsoft Corp.*, 405 F.3d 1326, 1329 (Fed. Cir. 2005) (per curiam) ("[W]hen the 'whereby'

clause states a condition that is material to patentability, it cannot be ignored in order to change the substance of the invention.").

The specification also describes, in part, the electrodes' "spaced relationship" in terms of their corresponding function of detecting distinct electrical signals, whereby EMG signals are substantially removed in the difference amplifier so that the output of the difference amplifier substantially consists only of the ECG signal. *See, e.g.*, '753 patent col. 1 ll. 53-58, col. 2 ll. 12-19. According to Biosig, when configuring the claimed heart rate monitor, skilled artisans can determine the "spaced relationship" between live and common electrodes by calculating the point in which EMG signals are substantially removed.

During reexamination, Biosig presented evidence in support of this position in a declaration by the inventor, Mr. Gregory Lekhtman, which was submitted in response to a PTO office action. *See 01 Communique Lab., Inc. v. LogMeIn, Inc.*, 687 F.3d 1292, 1298 (Fed. Cir. 2012) (considering statements made during reexamination as intrinsic evidence for purposes of claim construction). His declaration was based largely on tests he performed to show the effects of electrode configuration on EMG signals measured in the palms of the users' hands. In particular, he represented that the strength of an EMG signal measurement is proportional to the space between the active and ground electrode and the size of the electrodes. J.A. 194-95. He further declared that it was common knowledge for skilled artisans in 1992 that EMG potentials on each hand would be different, and that the

Appendix B

'753 patent requires a configuration of the detectors that produce equal EMG signals from the left and right hands. J.A. 200. This equalization or balancing, according to Mr. Lekhtman, is achieved by detecting EMG signals on the left and right palms, which are delivered to a differential amplifier in the EMG measuring device. Available design variables are then adjusted until the differential output is minimized, *i.e.*, close to zero, and the ECG to EMG ratio is determined to be sufficient for an accurate heart rate determination. J.A. 200-01. Mr. Lekhtman explained that some of these design variables in producing a balanced detection of EMG signals include spacing, size, shape and materials of the electrodes. Moreover, Mr. Lekhtman represented that a common analog oscilloscope available in 1992 would have been used by those skilled in the art to measure the signals and to determine the best ECG/EMG ratio. J.A. 210-11.

For comparison, Mr. Lekhtman tested the circuitry as recited in the '753 patent and the circuitry as recited in Fujisaki, the prior art cited during reexamination. Mr. Lekhtman's test results indicated that an ECG/EMG ratio "in the range of about 3-10 would be manifested at the output of the differential amplifier" of the '753 patent as having substantially zero influence from the EMG signal. J.A. 213; 343. Conversely, an ECG/EMG ratio of about 1 or less, as generated by the circuitry claimed in the Fujisaki patent, was found to be masking the ECG signal and thus requiring further filtering after the differential amplifier. J.A. 213.

Mr. Lekhtman also described Dr. Henrietta Galiana's test results of a laboratory mock-up of the claimed apparatus—results prepared in the course of the 2004 Action at the district court against Nautilus. J.A. 204-05; 1029-56. Her test results and corresponding report supported Mr. Lekhtman's statements and demonstrated that two detected EMG signals on opposite hands can indeed have substantially the same amplitude and phase, and that a difference amplifier will then reduce those EMG signals to substantially zero. J.A. 205; 1048-54.

Finally, extrinsic evidence underscores the intrinsic evidence. In particular, Biosig submitted a declaration of yet another expert, Dr. George Yanulis, in support of its opposition to Nautilus's summary judgment motion in the underlying district court litigation, which confirmed Mr. Lekhtman's and Dr. Galiana's test results and reports. J.A. 1670.

In summary, the claims provide inherent parameters sufficient for a skilled artisan to understand the bounds of "spaced relationship." In addition, a skilled artisan could apply a test and determine the "spaced relationship" as pertaining to the function of substantially removing EMG signals. Indeed, the test would have included a standard oscilloscope connected to both the inputs and outputs of the differential amplifier to view the signal wave forms and to measure signal characteristics. With this test, configurations could have been determined by analyzing the differential amplifier input and output signals for detecting EMG and ECG signals and observing the substantial removal of EMG signals from ECG

signals while simulating an exercise. These parameters constitute the metes and bounds of "spaced relationship" as articulated in the '753 patent. Nothing more rigorous is required under § 112, ¶ 2.

The district court nonetheless held Biosig had not articulated with specificity the dimensions or other parameters characterizing the space between the electrodes: "It should be half inch, one inch, two inches, three inches. What is the space[d] relationship?" Summ. J. Hr'g Tr. 35:7-8. The district court likewise stated that the '753 patent failed to disclose the "composition of the handle" and whether the electrodes were "between the two middle fingers, the outer first and fourth finger, the thumb underneath and the fingers on top? Where is the spaced relationship?" Summ. J. Hr'g Tr. 38:16-24. The district court also questioned whether having "small" hands as opposed to "large" hands would affect the "spaced relationship" between the live and common electrodes. Summ. J. Hr'g Tr. 40:2-6. Moreover, the district court found nothing in evidence that provided how a skilled artisan would have determined the appropriate parameters yielding the necessary "spaced relationship" as recited by the '753 patent: "[W]hat [the expert] says is that through trial and error, which he doesn't describe, one can find a spaced relationship. That may be. But there's no description." Summ. J. Hr'g Tr. 39:6-8. These inquiries however miss the mark in this instance because they do not support an indefiniteness analysis.

To begin, we have not insisted that claims be plain on their face in order to avoid a determination of invalidity for

indefiniteness. *Exxon*, 265 F.3d at 1375. "If the meaning of the claim is discernible, even though the task may be formidable and the conclusion may be one over which reasonable persons will disagree, we have held the claim sufficiently clear to avoid invalidity on indefiniteness grounds." *Id.* In addition, "[p]rovided that the claims are enabled, and no undue experimentation is required, the fact that some experimentation may be necessary to determine the scope of the claims does not render the claims indefinite." *Id.* at 1379. When relevant values can be obtained, § 112 ¶ 2 is satisfied. *Marley Mouldings Ltd. v. Mikron Indus., Inc.*, 417 F.3d 1356, 1360-61 (Fed. Cir. 2005) ("Although the district court was concerned that the claims encompass a range of volumes and thereby also of weights, § 112 ¶2 is satisfied when the relevant values can be 'calculated or measured.'") (citation omitted). By embracing this standard, "we accord respect to the statutory presumption of patent validity, and we protect the inventive contribution of patentees, even when the drafting of their patents has been less than ideal." *Exxon*, 265 F.3d at 1375 (internal citations omitted); *see Morton Int'l, Inc. v. Cardinal Chem. Co.*, 5 F.3d 1464, 1470, 1472 (Fed. Cir. 1993) (citing 35 U.S.C. § 282). Therefore, objections relating to the mere fact that there may be some need for experimentation to determine the scope of the claims carry little weight.

Likewise, the district court's objections to the claims as written do not support imprecision of the claims. Rather, the objections are based on the premise that the '753 patent does not include disclosure sufficiently commensurate with the scope of the claims. These objections, if relevant,

provide grounds for invalidity under § 112, ¶ 1 and not § 112, ¶ 2.[4] As this court has explained:

> A patent claim to a fishing pole would not be invalid on indefiniteness grounds if it contained a limitation requiring that the pole be "at least three feet long," even though a 50 foot long fishing pole would not be very practical. By the same token, there is nothing indefinite about the claim language at issue in this case simply because it covers some embodiments that may be inoperable.

Exxon, 265 F.3d at 1382; *Personalized Media Commc'ns, LLC v. Int'l Trade Comm'n*, 161 F.3d 696, 706 (Fed. Cir. 1998) (rejecting expert testimony stating generally that a "digital detector" was not adequately disclosed in the patent and could not be built by those of ordinary skill as relevant only to the sufficiency of the written description to enable the practice of the invention of the claims); *Miles Labs., Inc., v. Shandon, Inc.*, 997 F.2d 870, 875, (Fed. Cir. 1993) (same). Breadth is not indefiniteness. *SmithKline Beecham Corp. v. Apotex Corp.*, 403 F.3d 1331, 1340-41 (Fed. Cir. 2005). Hence, inquiries as to the size of the users' hands, placement

---

4. 35 U.S.C. § 112, ¶ 1 generally relates to the sufficiency of the written descriptions of patents, including enablement, and states in relevant part: "The specification shall contain a written description of the invention, and of the manner and process of making and using it, in such full, clear, concise, and exact terms as to enable any person skilled in the art to which it pertains . . . to make and use the same . . . ."

of fingers, and the "composition of the handle" may be relevant, if at all, to issues that relate to enablement under § 112, ¶ 1, not indefiniteness under § 112, ¶ 2, because they are directed to the operability of varying embodiments of the claimed heart rate monitor, not to the precision of the claims at issue. Accordingly, these objections do not address the inherent parameters set forth in the intrinsic evidence.

Still, Nautilus seeks support in *Halliburton*. In *Halliburton*, the invention at issue was a "fragile gel" that was used in drilling. 514 F.3d at 1246-47. This court found that the patent-at-issue did not disclose how the claimed "fragile gel" performed differently than the disclosed prior art, such as "how much more quickly the gels broke when stress was imposed, or how much more quickly the gels reformed when stress was removed." *Halliburton*, 514 F.3d at 1253. Halliburton's failure to distinguish the fragileness of the drilling fluids of the invention from the close prior art, according to this court, was fatal because it did not limit on what was invented beyond the prior art. *Id.* For example, the court noted that the fluids of the invention may provide less resistance to shearing (*i.e.*, break more quickly) than the prior art fluids, but the degree of improved speed, the court said, remained ambiguous. *Id.* Thus, this court held that it was unclear whether a skilled artisan would have interpreted this claim as having an upper bound of fragility. *Id.*

Halliburton is distinguishable. Here, the claimed apparatus has inherent parameters where the "spaced relationship" cannot be larger than the width of a

user's hand. Additionally, it has been shown that skilled artisans can readily ascertain the bounds of the "spaced relationship" through tests using standard equipment. Thus, the "upper bound" that was lacking in *Halliburton* is found here. As a result, *Halliburton* fails to support Nautilus.

Rather, this case is analogous to *Star Scientific II*. There, the disputed term was "controlled environment" as applied to the practice of tobacco curing and "whether a person of ordinary skill would know how to establish a controlled environment to perform the claimed method." *Star Scientific II*, 655 F.3d at 1373-74. This court held that the fact that the patents-at-issue did not give exact numbers measuring humidity, temperature, and airflow in a conventional curing barn was not dispositive. *Id.* at 1374. On the contrary, this court found there was evidence showing that "a person of skill in the art of tobacco curing would possess adequate understanding to manipulate these variables to create a controlled environment." *Id.* Further, because conventional curing varied depending on the conditions for each cure, specific numerical values were found not necessary for one skilled in the art to implement conventional curing. *Id.* Hence, "controlled environment" was held not insolubly ambiguous.

Like *Star Scientific II*, the record shows that the variables here, including the spacing, size, shape, and material affecting the "spaced relationship" between the electrodes, can be determined by those skilled in the art. Thus, "spaced relationship" cannot be said to be insolubly ambiguous.

Appendix B

IV.

Contrary to the district court's decision and to Nautilus's contention on appeal, this court's jurisprudence does not proscribe drafting or defining claims in relation to their functions. *Moore U.S.A., Inc. v. Standard Register Co.*, 229 F.3d 1091, 1111 (Fed. Cir. 2000) ("We note that there is nothing wrong with defining the dimensions of a device in terms of the environment in which it is to be used."); *see also Vizio, Inc. v. Int'l Trade Comm'n*, 605 F.3d 1330, 1340 (Fed. Cir. 2010) ("[T]he 'for decoding' language . . . is properly construed as a limitation, and not merely statement of purpose or intended use for the invention, because 'decoding' is the essence or a fundamental characteristic of the claimed invention."). That is, "claims are not necessarily indefinite for using functional language." *Microprocessor Enhancement Corp. v. Texas Instruments Inc.*, 520 F.3d 1367, 1375 (Fed. Cir. 2008). Indeed, functional language in a means-plus-function format is explicitly authorized by statute. 35 U.S.C. § 112, ¶6. Functional language may also be used to limit the claims without having the means-plus-function format. *Microprocessor Enhancement Corp.*, 520 F.3d at 1375.

Yet, the district court found the evidence consisting of test results and their corresponding references to "substantial removal of EMG signals" conclusory because, according to the court, Biosig failed to show how it conducted its tests that allegedly illustrate a "spaced relationship" between the electrodes and the substantial removal of EMG signals. In particular, the district court found fault with the experts' references to the function of

the claim term only, and it ultimately held that "this is all a description of the desired result and not a description of any invention . . . and, therefore, violates the requirement of specificity in Section 112." Summ. J. Hr'g Tr. 42:25-43:4.

Courts often refer to the context in which the patented invention is claimed to ascertain its scope. *Medrad, Inc. v. MRI Devices Corp.*, 401 F.3d 1313, 1319 (Fed. Cir. 2005) ("It is therefore entirely proper to consider the functions of an invention in seeking to determine the meaning of particular claim language."). Hence, to determine the proper meaning of "spaced relationship," we must refer to "spaced relationship" in the context of the intrinsic evidence, including the claim language, specification, and prosecution history. The district court viewed "spaced relationship" in a vacuum by choosing to turn a blind eye to the functional aspects of claim 1, *e.g.*, how "spaced relationship" contributes to the removal of noise signals, such as EMG signals, and the overall capabilities of the claimed heart rate monitor. However, without context, it would be impossible to ascertain "what the inventors actually invented and intended to envelop with the claim," *Renishaw PLC v. Marposs Societa' per Azioni*, 158 F.3d 1243, 1250 (Fed. Cir. 1998), and to examine the patent from the perspective of a person skilled in the art, *e.g.*, *Tegal Corp. v. Tokyo Electron Am., Inc.*, 257 F.3d 1331, 1342 (Fed. Cir. 2001). Thus, to the extent the district court failed to consider Biosig's evidence based on its reasoning that the evidence spoke only to the "function of the claim," this was error.

Nautilus makes a related contention that the claims at issue are invalid as they impermissibly claim both an

apparatus and a method of use. Specifically, Nautilus contends that claim 1 recites a heart rate monitor and a required step that a user holds the monitor. According to Nautilus, it is unclear whether the alleged infringement occurs when one makes a heart rate monitor having the recited structural elements, or whether infringement allegedly occurs when the user actually holds the handle and contacts the electrodes. This contention is unpersuasive.

The '753 patent recites apparatus claims with functional limitations that describe the capability of substantially removing EMG signals. *See, e.g.*, '753 patent col. 5 l. 16-col. 6 l. 15. Indeed, claim 1 of the '753 patent is clearly limited to a heart rate monitor possessing the recited structure that is capable of substantially removing EMG signals. It is not indefinite. Accordingly, this case fails to invoke our decision in *IPXL Holdings, LLC v. Amazon.com, Inc.*, 430 F.3d 1377 (Fed. Cir. 2005) (holding claims at issue as indefinite because they simultaneously claimed an apparatus and method steps).

Conclusion

The only issue on this appeal is the summary judgment of indefiniteness. Other aspects of the defense of patent invalidity, although raised in the district court, are not before us, and may be considered on remand. We reverse the district court's invalidity determination and remand for further proceedings.

REVERSED AND REMANDED

Appendix B

UNITED STATES COURT OF APPEALS
FOR THE FEDERAL CIRCUIT

012-1289

BIOSIG INSTRUMENTS, INC.,

Plaintiff-Appellant,

v.

NAUTILUS, INC.,

Defendant-Appellee.

Appeal from the United States District Court for the Southern District of New York in No. 10-CV-7722, Judge Alvin K. Hellerstein.

SCHALL, *Circuit Judge, concurring.*

I join the court's reversal of the judgment on appeal and its remand of the case for further proceedings. I write separately, however, because, while I agree with the court that the district court erred in holding claims 1 and 11 of the '753 patent invalid by reason of indefiniteness, I would rest that ruling on a more limited analysis. I therefore respectfully concur.

In Part II of the Discussion section of its opinion, the court correctly sets forth our law on indefiniteness. In short, a claim is indefinite (1) when it is not amenable to construction or (2) when, even if it can be construed, "the construction remains insolubly ambiguous, meaning it fails

to provide sufficient clarity [delineating the metes] and bounds of the claim to one of skill in the art," *Star Scientific, Inc. v. R.J. Reynolds Tobacco Co.*, 655 F.3d 1364, 1373 (Fed. Cir. 2011). *See Datamize, LLC v. Plumtree Software, Inc.*, 417 F.3d 1342, 1347 (Fed. Cir. 2005) ("Only claims 'not amenable to construction' or 'insolubly ambiguous' are indefinite."); *see also Star Scientific, Inc. v. R.J. Reynolds Tobacco Co.*, 537 F.3d 1357, 1371 (Fed. Cir. 2008) ("In and of itself, a reduction of the meaning of a claim term into words is not dispositive of whether the term is definite .... And if reasonable efforts at claim construction result in a definition that does not provide sufficient particularity and clarity to inform skilled artisans of the bounds of the claim, the claim is insolubly ambiguous and invalid for indefiniteness.") (internal citations omitted). As the court concludes, neither of these two grounds for indefiniteness exists in this case.

First, the "spaced relationship" limitation plainly was amenable to construction. The district court construed the two recitations of "in spaced relationship with each other" in claim 1 to mean that "there is a defined relationship between the live electrode and the common electrode on one side of the cylindrical bar and the same or a different defined relationship between the live electrode and the common electrode on the other side of the cylindrical bar." *See Biosig Instruments, Inc. v. Nautilus, Inc.*, No. 10-cv-7722, slip op. at 3 (S.D.N.Y. Sept. 29, 2011) (Dkt. 32, "Summary Order Memorializing Court's Patent Claim Term Constructions After a *Markman* Hearing"). Neither Biosig nor Nautilus disputes that the district court did, in fact, construe the "spaced relationship" limitation.

Second, the court's construction provided sufficient clarity to one of skill in the art as to the metes and bounds of the "spaced relationship" limitation. Put most simply, the district court construed that limitation to require "defined relationships," between the live electrode and the common electrode on each side of the cylindrical bar.[1] What that construction means is that, on each side of the cylindrical bar, there is a fixed spatial relationship between the live electrode and the common electrode. And the court correctly states that the intrinsic evidence relating to the '753 patent "discloses certain inherent parameters of the claimed apparatus, which to a skilled artisan may be sufficient to understand the metes and bounds of 'spaced relationship'." *See* Majority Op. at 13. In my view, along with the court's subsequent rejection of Nautilus's reliance on *Halliburton Energy Services, Inc. v. M-I LLC*, 514 F.3d 1244 (Fed. Cir. 2008); and *IPXL Holdings, L.L.C. v. Amazon.com, Inc.*, 430 F. 3d 1377 (Fed. Cir. 2005), that is all that is needed to put this case to rest.

My concern with the balance of the court's analysis is that it presumes a functional linkage between the "spaced relationship" limitation and the removal of EMG signals. In other words, the analysis proceeds as if the "spaced relationship" limitation itself—rather than other limitations of claim 1—included a functional requirement to remove EMG signals. *See* Majority Op. at 16-17 ("[A] skilled artisan could apply a test and determine the 'spaced

1. Although this construction may be seen as broad, as the court notes, "[b]readth is not indefiniteness." *See* Majority Op. at 19 (citing *SmithKline Beecham Corp. v. Apotex Corp.*, 403 F.3d 1331, 1340-41 (Fed. Cir. 2005)).

relationship' as pertaining to the function of substantially removing EMG signals."); *id.* at 13 ("The functionality of the claimed heart rate monitor as recited in claim 1, described in the specification, and which provided the basis for overcoming the PTO's office action rejections during reexamination, sheds further light on the meaning of 'spaced relationship.'"). Indeed, the parties to this appeal and the district court seem to presume the same. The language of the "spaced relationship" limitation, however, does not contain a functional requirement:

> a first live electrode and a first common electrode mounted on said first half in spaced relationship with each other;
>
> a second live electrode and a second common electrode mounted on said second half in spaced relationship with each other

'753 patent col. 5 ll. 28-33. In addition, as seen above, the district court's construction of the "spaced relationship" limitation does not include any functional language related to the removal of EMG signals, and Nautilus has not conditionally cross-appealed that construction.

In my view, we should not address a functional limitation included neither in the "spaced relationship" limitation itself nor in the district court's construction of that limitation. By allowing the functional limitation of EMG removal from elsewhere in claim 1 to color our analysis of the definiteness of the "spaced relationship" limitation, it seems to me we address an issue that is not currently before us.

APPENDIX C — ORDER OF THE UNITED STATES DISTRICT COURT, SOUTHERN DISTRICT OF NEW YORK, FILED JUNE 12, 2012

UNITED STATES DISTRICT COURT
SOUTHERN DISTRICT OF NEW YORK

10 Civ. 7722 (AKH)

BIOSIG INSTRUMENTS, INC.,

Plaintiff,

-against-

NAUTILUS, INC.,

Defendant.

ORDER

ALVIN K. HELLERSTEIN, U.S.D.J.:

Plaintiff has moved pursuant to Local Civ. R. 6.3 and Fed. R. Civ. P. 59 for reconsideration of my decision to grant Defendant's Motion for Summary Judgment.

The standard of review for reconsideration is "strict, and reconsideration will generally be denied unless the moving party can point to controlling decisions or data that the court overlooked—matters, in other words, that might reasonably be expected to alter the conclusion reached by the court." *Shrader v. CSX Transp., Inc.*, 70

F.3d 255, 257 (2d Cir. 1995) *see* Fed. R. Civ. P. 59, Local Civ. R. 6.3. "[A] motion to reconsider should not be granted where the moving party seeks solely to relitigate an issue already decided." *Shrader*, 70 F.3d at 257.

Local Civ. R. 6.3 directs a party seeking reconsideration to "set forth concisely the matters or controlling decisions which counsel believes the court has overlooked." Plaintiff's motion for reconsideration, however, in large part simply seeks to relitigate that which has been decided, without identifying overlooked matters or controlling decisions. Plaintiff contends that its motion is based on the Patent and Trademark Office's denial of a request for ex parte reexamination of the '753 Patent transmitted February 17, 2012 (the "Denial of Reexamination").[1] I grant Plaintiff's motion for reconsideration for the limited purpose of considering the Denial of Reexamination.

Upon reconsideration, however, I reaffirm my decision to grant Defendant's Motion for Summary Judgment. I granted Defendant's Motion for Summary Judgment because I found that Claim 1 of the '753 Patent failed to satisfy the definiteness requirement of 35 U.S.C. § 112. Specifically, I found that the claim term "spaced relationship" was impermissibly indefinite. Reviewing the Denial of Reexamination, I find nothing that merits altering this finding. Nothing in the Denial of Reexamination imbues "spaced relationship" with sufficient definiteness.

---

1. Plaintiff states that its litigation counsel did not become aware of the Denial of Reexamination until after the Court granted Defendant summary judgment.

The Clerk shall mark the motion (Doc. No. 60) terminated.

SO ORDERED.

Dated: June 12, 2012
New York, New York

/s/
ALVIN K. HELLERSTEIN
United States District Judge

APPENDIX D — JUDGMENT OF THE UNITED STATES DISTRICT COURT, SOUTHERN DISTRICT OF NEW YORK, FILED FEBRUARY 23, 2012

UNITED STATES DISTRICT COURT
SOUTHERN DISTRICT OF NEW YORK

10 CIVIL 7722 (AKH)

BIOSIG INSTRUMENTS, INC.,

Plaintiff;

-against-

NAUTILUS, INC.,

Defendant.

JUDGMENT

Defendant having moved for summary judgment, and the matter having come before the Honorable Alvin K. Hellerstein, United States District Judge, and the Court, on February 23, 2012, having rendered its Summary Order granting Defendants motion for summary judgment, dismissing the complaint with prejudice and dismissing Defendants counterclaims on consent without prejudice, it is,

ORDERED, ADJUDGED AND DECREED: That for the reasons stated in the Court's Summary Order

dated February 23, 2012, Defendants motion for summary judgment is granted; the complaint is dismissed with prejudice and Defendant's counterclaim are dismissed on consent without prejudice; accordingly, the case is closed.

Dated: New York, New York
February 23, 2012

RUBY J. KRAJICK
Clerk of Court

BY: /s/
Deputy Clerk

APPENDIX E — SUMMARY ORDER OF THE UNITED STATES DISTRICT COURT, SOUTHERN DISTRICT OF NEW YORK, FILED FEBRUARY 13, 2012

UNITED STATES DISTRICT COURT
SOUTHERN DISTRICT OF NEW YORK

10 Civ. 7722 (AKH)

BIOSIG INSTRUMENTS, INC.,

Plaintiff,

- against -

NAUTILUS, INC.,

Defendant.

ALVIN K. HELLERSTEIN, U.S.D.J.

SUMMARY ORDER

On February 22, 2012, oral argument was heard on Defendant's motion for summary judgment. For the reasons stated on the record, Defendant's motion is granted. Plaintiff's complaint is dismissed with prejudice. Defendant's counterclaims are dismissed on consent without prejudice. The clerk shall enter judgment in favor of Defendant and mark the motion (Doc. No. 39) terminated and the case closed.

Appendix E

SO ORDERED.

Dated: February 13, 2012
New York, New York

/s/
ALVIN K. HELLERSTEIN
United States District Judge

APPENDIX F — SUMMARY ORDER OF THE UNITED STATES DISTRICT COURT, SOUTHERN DISTRICT OF NEW YORK, FILED SEPTEMBER 29, 2011

UNITED STATES DISTRICT COURT
SOUTHERN DISTRICT OF NEW YORK

10 Civ. 7722 (AKH)

BIOSIG INSTRUMENTS, INC.,

Plaintiff,

-against-

NAUTILUS, INC.,

Defendant.

SUMMARY ORDER MEMORIALIZING COURT'S PATENT CLAIM TERM CONSTRUCTIONS AFTER A MARKMAN HEARING

ALVIN K. HELLERSTEIN, U.S.D.J.:

On August 11, 2011, the parties appeared before me for a hearing on the construction of claim terms in the patent-in-suit, U.S. Patent No. 5,337,753 ("'753 Patent"), pursuant to the United States Supreme Court's decision in *Markman v. Westview Instruments, Inc.*, 517 U.S. 370 (1996). Having considered the parties' written briefs and heard oral argument, I construe the '753 Patent's claim

terms as indicated on the record, memorialized in the chart appended to this order.

If the parties wish to file dispositive motions in response to my rulings, such motions shall be filed no later than November 10, 2011; opposition papers shall be filed no later than December 1, 2011; reply papers, if any, shall be filed no later than December 8, 2011.

SO ORDERED.

Dated: September 28, 2011
New York, New York

/s/
ALVIN K. HELLERSTEIN
United States District Judge

BIOSIG INSTRUMENTS, INC. v. NAUTILUS, INC.
CHART CONSTRUING DISPUTED CLAIM TERMS

U.S. PATENT NO. 5,337,753	
CLAIM TERM	***COURT'S RULING***
[1] "A heart rate monitor for use by a user in association with exercise apparatus and/or exercise procedures, comprising";	The phrase does not require any construction;
[1] "an elongate member";	The term "elongate member" means a cylindrical bar sufficiently long so that a person whose heart rate will be monitored can grip the cylindrical bar on both sides;
[1] "electronic circuitry including a difference amplifier having a first input terminal of a first polarity and a second input terminal of a second polarity opposite to said first polarity";	The phrase means electronic circuitry to cancel similarities and amplify differences between each of two inputs on the cylindrical bar;
[1] "said elongate member comprising a first half and a second half";	The phrase means that said cylindrical bar comprises a first half and a second half;

U.S. PATENT NO. 5,337,753	
CLAIM TERM	***COURT'S RULING***
[1] "a first live electrode and a first common electrode mounted on said first half in spaced relationship with each other; a second live electrode and a second common electrode mounted on said second half in spaced relationship with each other; said first and second common electrodes being connected to each other and to a point of common potential";	The phrase means that each side of the cylindrical bar has two electrodes: one live electrode and one common electrode; The term "electrode" means a conductor through which electricity can flow; The term "live electrode" means an electrode connected to an input of the difference amplifier; The term "common electrodes" refers to two electrodes connected to each other and to a common voltage, such as ground; The term "in spaced relationship with each other" means there is a defined relationship between the live

U.S. PATENT NO. 5,337,753	
CLAIM TERM	***COURT'S RULING***
	electrode and the common electrode on one side of the cylindrical bar and the same or a different defined relationship between the live electrode and the common electrode on the other side of the cylindrical bar;
[1] "said first live electrode being connected to said first terminal of said difference amplifier and said second live electrode being connected to said second terminal of said difference amplifier";	The phrase means the two live electrodes are electrically connected to input terminals of the difference amplifier;
[1] "a display device disposed on said elongate member";	The phrase means there is a display arranged on the cylindrical bar for showing the user's heart rate;

U.S. PATENT NO. 5,337,753	
CLAIM TERM	***COURT'S RULING***
[1] "wherein, said elongate member is held by said user with one hand of the user on said first half contacting said first live electrode and said first common electrode, and with the other hand of the user on said second half contacting said second live electrode and said second common electrode";	The phrase means the cylindrical bar is held by the user with her left hand contacting the electrodes on the left side of the cylindrical bar and her right hand contacting the electrodes on the right side of the cylindrical bar;
[1] "whereby, a first electromyogram signal will be detected between said first live electrode and said first common electrode, and a second electromyogram signal, of substantially equal magnitude and phase to said first electromyogram signal will be detected between said second live electrode and said second common electrode";	The term "electromyogram signal" means an electrical signal produced by muscles other than the heart; Viewing the electromyogram signal as a wave on a coordinate plane, the term "magnitude" refers to the size of the wave; Viewing the electromyogram signal as a wave on a coordinate plane, the term "phase" refers to one repetition, in a series of repetitions, as the

U.S. PATENT NO. 5,337,753	
CLAIM TERM	***COURT'S RULING***
	wave moves forward through time, starting at or near the x-axis, rising above the x-axis, crossing the x-axis, falling below the x-axis, and then returning to the x-axis to begin a new repetition. If one were to annotate Figure 3 of the '753 Patent, with the letter "A" above the first peak from the left, and with the letter "8" above the second peak from the left, from "A" to "8" would represent the phase;
[1] "so that, when said first electromyogram signal is applied to said first terminal and said second electromyogram signal is applied to said second terminal, the first and second electromyogram signals will be subtracted from each other to produce a substantially zero electromyogram signal at the output of said difference amplifier";	The phrase does not require any construction;

U.S. PATENT NO. 5,337,753	
CLAIM TERM	***COURT'S RULING***
[1] "and whereby a first electrocardiograph signal will be detected between said first live electrode and said first common electrode and a second electrocardiograph signal, of substantially equal magnitude but of opposite phase to said first electrocardiograph signal will be detected between said second live electrode and said second common electrode";	The term "electrocardiograph signal" means an electrical signal produced by the heart;
[1] "so that, when said first electrocardiograph signal is applied to said first terminal and said second electrocardiograph signal is applied to said second terminal, the first and second electrocardiograph signals will be added to each other to produce a non-zero electrocardiograph signal at the output of said difference amplifier";	The phrase does not require any construction;

U.S. PATENT NO. 5,337,753	
CLAIM TERM	***COURT'S RULING***
[1] "means for measuring time intervals between heart pulses on detected electrocardiograph signal";	This is a means-plus-function element construed under 35 U.S.C. § 112, ¶ 6; *Function*: Measuring time intervals between heart pulses on detected electrocardiograph signals; *Structure*: The structure for this element is a microprocessor programmed with an algorithm for measuring the time intervals between pulses as disclosed in the '753 Patent at 4:4-12 and Figures 4-1 and 4-2 and equivalents under 35 U.S.C. § 112, ¶ 6;
[1] "means for calculating the heart rate of said user using said measure[d] time intervals";	This is a means-plus-function element construed under 35 U.S.C. § 112, ¶ 6; *Function*: Calculating the user's heart rate using said measured time intervals;

U.S. PATENT NO. 5,337,753	
CLAIM TERM	***COURT'S RULING***
	Structure: The structure for this element is a microprocessor programmed according to the algorithms in Figures 4-3 to 4-7 and in column 4, lines 13-28, and equivalents under 35 U.S.C. § 112, ¶ 6.
[1] "said means for calculating being connected to said display device";	The phrase means the structure for calculating the user's heart rate is connected to the heart rate display;
[1] "whereby. the heart rate of said user is displayed on said display device."	The phrase means the display shows the heart rate calculated for the user;
[11] "A monitor as defined in claim 1 wherein said elongate member is mounted on an exercise apparatus; said electronic circuitry being mounted in said exercise apparatus."	The phrase means that the cylindrical bar with the electrodes is mounted on the exercise machine, and the electronic circuitry, including the difference amplifier, is mounted in the exercise machine.

APPENDIX G — TRANSCRIPT OF PROCEEDINGS OF THE UNITED STATES DISTRICT COURT, SOUTHERN DISTRICT OF NEW YORK, DATED FEBRUARY 22, 2012

[1] UNITED STATES DISTRICT COURT
SOUTHERN DISTRICT OF NEW YORK

10 CV 7722 (AKH)

BIOSIG INSTRUMENTS, INC.,

Plaintiff,

v.

NAUTILUS, INC.,

Defendant.

New York, N.Y.
February 22, 2012
2:35 p.m.

Before:
HON. ALVIN K. HELLERSTEIN,
District Judge

* * *

[2] (In open court)

THE DEPUTY CLERK: Biosig Instruments, Inc. v. Nautilus, Inc.

Appendix G

Counsel, please state your appearances for the record.

MR. BONELLA: Michael Bonella from Kessler Topaz for the plaintiff Biosig Instruments, Inc.

And with me is Jenna Pellecchia from my firm; and John Bone, from the firm of Heidell, Pittoni.

THE COURT: Are you going to be arguing, right, Mr. Bonella?

MR. BONELLA: Yes, sir, your Honor.

THE COURT: Thank you.

First row can sit.

MR. BONELLA: Thank you, your Honor.

MR. GERINGER: Your Honor, James Geringer for defendant Nautilus.

I will be arguing.

With me is my co-counsel, Josh Sivin.

THE COURT: Good afternoon, gentlemen.

Please sit down.

I think what I'd like to do first is to set out the context of where we are and then to hear the parties.

Appendix G

The plaintiff, Biosig Instruments, Inc., is a corporation incorporated in Canada with headquarters in Quebec. Biosig's business is to design, manufacture, and sell exercise [3] equipment and various electronics and components used with such equipment.

The defendant, Nautilus, Inc., is a corporation incorporated in the State of Washington. It has its headquarters in Vancouver.

Is that Vancouver, Washington or Vancouver, British Columbia?

MR. GERINGER: Washington, your Honor.

THE COURT: Washington.

I did not know Vancouver was a city in the State of Washington.

MR. GERINGER: We call it Vancouver USA.

THE COURT: I see. Now I understand.

I had the experience last week to be a visiting judge in the Ninth Circuit, Pasadena, and sat with Judge Jerome Farris. His headquarters is in Seattle, the Ninth Circuit Court of Appeals. Very pleasant man, engaging many stories of having grown up as an African-American in Birmingham, Alabama of the 1930s. And went on to -- I forget what college, I think it was Columbia. And then he was educated, he said, because he chose the school that was farthest from the east in which to be educated, which

turned out to be the University of Washington Law School, and was Order of Coif and Law Review, and decided to practice there. And in ten years, made a fortune of money, and then became a judge, a very fine judge.

[4] Sorry about that digression.

Nautilus uses its name "Nautilus" as a trade name, along with others, in connection with exercise equipment in the United States. The case is brought here within the subject matter jurisdiction of this Court, pursuant to 28 U.S.C., Sections 1331 and 1338(a).

Biosig's claim arises under the patent laws of the United States, 35 U.S.C., Section 101 and sections thereafter.

In brief summary, Biosig alleges that in the 1990s, it disclosed a technology claimed in Patent 5,337,753, which I'll call the '753 patent, to a predecessor-in-interest of Nautilus. Nautilus did not purchase the technology from Biosig; rather, its predecessor simply began manufacture, market, distribute, offer for sale, and sell exercise equipment that Biosig claims infringed upon the '753 patent.

Nautilus never obtained a license to use the technology claimed in the patent, and Biosig alleges that Nautilus was a willful infringer of the '753 patent and continued to infringe even after Biosig alleges the reexamination procedures in the United States Patent and Trademark Office confirmed the patent.

Appendix G

Let me state a bit of history.

In August 2004, Biosig sued Nautilus in this United States District Court, alleging infringement of the '753 patent. During the pendency of that litigation, Nautilus twice [5] asked the Patent and Trademark Office to reexamine the '753 patent. The office granted both reexamination requests, conducted reexamination procedures twice. And during the pendency of those reexamination procedures, both parties voluntarily dismissed without prejudice the claims and counterclaims pending in this Court, I think before me, though I don't really have a memory of those earlier proceedings.

The Patent and Trademark Office concluded its reexamination proceedings in June of 2010. There were some small changes, but basically the Patent and Trademark Office reaffirmed its grant of the patent.

This lawsuit began in October 2010, and the pleadings were at issue somewhere around January or February 2011, about a year ago.

On August 11, 2011, before any significant discovery proceedings, I conducted a *Markman* hearing. First, as is my practice, I benefited by a tutorial that both sides conducted jointly. That prepared me very significantly for the *Markman* hearings. I held those hearings and construed the patent in an order I issued on September 28, 2011. And then reaffirmed, after a motion for a rehearing by Nautilus, commenting on the file wrapper on October 24, 2011.

Appendix G

Nautilus makes this motion under Rule 56, seeking summary judgment on two issues: One is that Nautilus did not infringe. I think this branch of the motion is premature [6] without discovery, and I deny that aspect of the motion as premature.

The second part of the motion, however, has a great deal of cogency to it, which we will examine as we go along. And that is a claim that the patent is invalid because of indefiniteness and failure in that respect to satisfy the requirements of Section 112 of the patent laws.

Section 112 provides that the specification shall contain a written description of the invention and of the manner and process of making and using it in such full, clear, concise, and exact terms as to enable any person skilled in the art to which it pertains, where with which is most nearly connected to make and use the same, and shall set forth the best mode contemplated by the inventor of carrying out his invention.

The specification shall conclude with one or more claims particularly putting out and distinctly claiming the subject matter which the applicant regards as his invention.

Those are the relevant terms of Section 112. And the motion of Nautilus argues that the Biosig patent, in a manner that I will get to, does not conform -- does not satisfy -- the requirements of the specificity.

Patents are presumed valid under 35 U.S.C., Section 282. And the parties seeking to invalidate a patent must

submit clear and convincing evidence of invalidity. My [7] requirement is to draw all justifiable inferences in favor of the nonmoving party, that is, in favor of Biosig, on the basis of the credible evidence. The citation for that is *Boston Scientific Corp. v. Johnson & Johnson*, 647 F.3d 1353 (Fed. Cir. 2011).

There are two aspects of indefiniteness.

First there's a failure to differentiate the '753 patent from the prior art; and, second, there's a failure to describe the patent itself, particularly pointing out and distinctly claiming the subject matter which the applicant regards as his invention.

Indefiniteness -- or lack of definiteness is probably a better way -- is a question of law. And it is established where an accused infringer shows by clear and convincing evidence that a skilled artisan could not discern the boundaries of the claim based on the claim language, the specification, and the prosecution history, as well as the expert's knowledge of the relevant art area. That's taken from *Halliburton Energy Services, Inc. v. M-1*, 514 F.3d 1244 at Pages 1249 and 50, (Fed. Cir. 2008).

Absolute clarity is not required. Only claims not amenable to construction or insolubly ambiguous are construed to be indefinite. The citation for that is *Trading Technologies, Inc. v. East B Inc.*, 595 F.3d 1340 at Page 1358, (Fed. Cir. 2010).

[8] Claim specificity or definiteness is analyzed not in a vacuum, but in light of the teachings of the prior art

and of the particular application disclosure as it would be interpreted by one possessing the ordinary level of skill in the pertinent art. And that is the holding of *Energizer Holdings, Inc. v. International Trade Commission*, 435 F.3d 1366 at Page 1370, (Fed. Cir. 2006).

There are many other citations that I could discuss, but they are basically redundant of what we have here.

The language I find most apt in relationship to this case is the *Halliburton* case. It's a case where the party enjoyed the patent, obtained the patent for what it called a fragile gel that was used in drilling through mud.

The gel was set to have the property -- was claimed to have the embedded property of becoming liquid when going through whatever it was going through. And when it hit a block, to become a gel and, therefore, prevent the backflow of the fluid. And that was claimed to be the invention.

The problem, the Court found, is that fragility was not defined. And the Court said, and this is to be found at page 1253 of the decision: "By failing to identify the degree of the fragility of its invention, Halliburton's proposed definition would allow the claim to cover not only that which it invented that was superior to the prior art, but also all future improvements to the gel's fragility.

[9] "While patentees are allowed to claim their inventions broadly, they must do so in a way that distinctly identifies the boundaries of their claims. The fluids of the gel invention may provide less resistance to sheer, that

is, break more quickly, than the prior art fluids, but the degree of improved speed remains ambiguous.

"Thus, it is unclear whether a person of ordinary skill in the art would have interpreted this claim as having an upper bound of fragility."

Halliburton tried to define the fragility of the gel by using the metaphor of an L-shaped curve, contending that that metaphor distinguished the fragility of the gels claimed in the patent from prior art, and defined how the gels broke when stress was imposed, or how much more quickly the gels would be able to reform when stress was removed. I think I may have described it the opposite way, but it doesn't make any difference for purposes of extracting the rule of law.

The Court held that Halliburton's failure to distinguish the fragileness of the drilling fluids of the invention in the close prior art is fatal.

The case cites what I think was an affirmance of a holding of mine, but I'm not sure, so I won't mention it.

In this case, what we have, as I defined it after the *Markman* hearing, is a heart rate monitor for use by a user of exercise equipment.

[10] The patent taught an invention or claimed invention in an electronic circuitry which was able, in effect, to distinguish various noises emitted by the muscular activity of the body with heart rate. And it was

based on live electrodes in the portion of the exercise equipment which was grabbed by the two hands.

The invention described a first live electrode, and a first common electrode mounted on a first half of the terminal in -- and here the key words -- a spaced relationship with each other. And then a second live electrode, and a second common electrode mounted on what was called the second half, again, in a "spaced relationship with each other."

And then the claim went on saying that the first and second common electrodes were to be connected to each other and to a point of common intention.

I ruled that the term "in spaced relationship with each other" means that there is a defined relationship between the live electrode and the common electrode on one side of the cylindrical bar that the user of electrical equipment holds, and the same or a different defined relationship between the live electrode and the common electrode on the other side of the cylindrical bar.

So if one would picture a bicycle handle, each part of the handle being fitted with the live electrode and a common electrode, the spaced relationship is the space between the [11] live and the common electrode. But that term is not defined. And if I have the argument correct -- I think I do, but I'll need confirmation -- the motion by Nautilus argues that without definition of the space and relationship, there is a fatal ambiguity.

Before I go on, let me seek confirmation from Mr. Geringer.

MR. GERINGER: That's correct, your Honor.

THE COURT: You can sum it up that easily.

Mr. Bonella, do I have the allegation correct?

MR. BONELLA: I believe you do, your Honor.

THE COURT: Thank you very much.

I appreciate that confirmation from both of you, since, as I admitted when we came together initially, my knowledge of physics was completely taught at the Bronx High School for Science and it didn't go beyond that; so perhaps it's an accolade to grade school.

Biosig produced an expert, George Yanulis, who submitted a declaration expressing the view that the Biosig patent claims are not indefinite, as it is my opinion that the claimed scope is understandable by a person of ordinary skill in the art.

Further, he said, a person of ordinary skill in the art could readily discern the claimed scope of the '753 patent. A person of ordinary skill in the art, having a relevant [12] technical degree, such as a biomedical engineering degree, and a few years' experience in the relevant field of medical devices involving measurements of heart rates, could easily discern Biosig's claims, Mr. Yanulis' claims, the claimed scope, because the EMG -- and that stands again for electro mechanical --

Appendix G

MR. BONELLA: Electromyogram, your Honor.

THE COURT: Electromyogram signals. Electrical, we know; myogram is the signals given out by the heart; is that right?

MR. BONELLA: Based on muscle signals from the body, from the heart.

THE COURT: Thank you.

Because the EMG signals have to be substantially removed, and a person with ordinary skill in the art can test for that, just as Dr. Lekhtman did during the reexamination proceedings. His testing showed that Fujisaki -- that's the prior patent -- did not substantially remove the EMG signals. A person of ordinary skill in the art knows how to test to determine whether EMG signals are substantially removed. The '753 patent does not use any terminology that one of ordinary skill in the art would not readily understand.

Let me pause for a minute and ask Mr. Bonella to differentiate the two types of signals that we're looking to distinguish. First, the EMG signal with electrical myocardial [13] signal.

MR. BONELLA: Right, your Honor.

There's the EMG signal, and that's the electromyograph signals that the body gives off from the muscles of the body. And then there's the electrocardiograph signals.

Those are the actual signals that you want to measure that are indicative of the heart rate.

So the goal is while a person's exercising, the patent claims a system that has the capability of removing the EMG signals which will mask the ECG signals. And so it removes the EMG signals, so you are left behind the ECG signals which indicate the heart rate.

THE COURT: And for many using exercise equipment, I take it that the ECG signals are intended to stay within a prescribed increase and not go beyond it.

MR. BONELLA: That's correct, your Honor.

THE COURT: So it becomes critical to know what the true heart rate is, and to cancel out, as it were, the signals given from the muscles.

MR. BONELLA: That's correct, your Honor.

THE COURT: All right.

I think that's a sufficient prelude to the motion. I hope I've simplified matters for both of you.

And the moving party will go first, and that is Mr. Geringer.

[14] MR. GERINGER: Thank you, your Honor.

A person skilled in the art, as your Honor mentioned, is the one who needs to understand the specific scope,

metes and bounds of the claim. A person skilled in the art needs to be able to tell is a given physical structure inside the scope or outside the scope.

So on the screen and on our board, we've just given three examples. Top one is from the patent; next one is the Fujisaki prior art; the one below is a mock-up that Biosig's expert, Dr. Galiana, did in the first Biosig case. It is also part of the file history because it came into the reexamination.

THE COURT: Let me stop you here.

We need to make a record that will travel to the Court of Appeals. So should we assign a number to this, to this chart?

MR. GERINGER: Yes, your Honor.

Could we bring the Court copies of our presentation? I'm sure that --

THE COURT: You can just keep them.

So this will be what, court exhibit or your exhibit?

MR. GERINGER: Yes, your Honor. And defendants use letters; is that correct?

THE COURT: Defendants should be using letters.

MR. GERINGER: Will be Exhibit A.

Appendix G

[15] THE COURT: Exhibit A.

And what do we call it, a comparative depiction of what?

MR. GERINGER: If your Honor would allow, there are nine slides in our deck. If we could call the deck Exhibit A, we would characterize this Page 2 as depictions of three heart rate monitors.

They are labeled by name on Page 4 of Exhibit A, on the left side, indicating that the top drawing is from the patent, the '753. The middle drawing is a crop from a figure of the Fujisaki '200 prior art patent. And the one on the bottom is from the joint appendix, the expert report of Dr. Henrietta Galiana, which was submitted. And this is also a crop of a larger picture which I'll just briefly show the Court. Shows on Page 8 of Exhibit A. And this is from her report in which she built -- she opined that she had built the device of Claim 1.

May I continue, your Honor?

THE COURT: Please.

MR. GERINGER: So a person of skill in the art needs to be able to determine with sufficient clarity what the bounds are so they know what they can build, what they can't.

Fujisaki's heart rate monitor that's shown in the middle has to be outside the scope of the claim. If you look

at the file history, it's distinguished; it's allowed over the [16] Fujisaki patent. I think there can be no doubt that a person skilled in the art reading the intrinsic evidence has to be of the mind that the Fujisaki heart rate monitor in the middle is out. Biosig does not contest this; Dr. Yanulis's testimony is --

THE COURT: To put it in different words, the '753 patent must be an invention of what was taught by the Fujisaki patent.

MR. GERINGER: If I could restate, and your Honor can confirm whether or not I'm being accurate, the '753 patent has to identify some novel structure that the Fujisaki prior art did not disclose.

THE COURT: I accept that.

MR. GERINGER: Thank you, your Honor.

Because this is about physical structure. The software stuff, that was the noninfringement argument, and your Honor has denied that as premature. So we're only talking today about physical structure, and can one distinguish the physical attributes of Fujisaki from the patent.

And what I show on Page 5 of Exhibit A is not only those two heart rate monitors now, but also from each source the circuits. The point is that they both have the same physical circuit. There are four electrodes: Two live and two common. The common here are -- when I say connected to ground, that's what "common" meant. And

the two connected to the diff [17] amp, those are the live electrodes. And your Honor will recall that the diff amp amplifies differences, cancels what's the same.

THE COURT: "Diff amp" is differential amp?

MR. GERINGER: Correct, your Honor.

THE COURT: Differential what?

MR. GERINGER: Amplifier. So it amplifies differences.

If the heart signal, because it's on the left side of the body, is asymmetric, and so the signals coming in on the left and the right are going to be different, they should be added; those differences should be amplified. If noise was coming in the same through the left and right side, it's the same, it should be cancelled in the diff amp.

But it's the same physical circuit here. And that's not denied. What is posited by Biosig is that a person with skill in the art can distinguish the physical attributes of Fujisaki by testing. That is all that Dr. Yanulis -- should I wait, your Honor?

THE COURT: Yes.

(Pause)

THE COURT: I'm sorry. Go ahead.

MR. GERINGER: Thank you, your Honor.

To quote Dr. Yanulis's declaration, he says on Page 13 of his expert declaration submitted by Biosig: "A person of [18] ordinary skill in the art can test for that, just as Dr. Lekhtman did during the reexamination proceedings."

And the "that" that's being tested for is whether EMG signals have been removed.

So what is this test?

That's all that Dr. Yanulis says on this point, he says do what Dr. Lekhtman said in the file history.

What is this test?

Well, first of all, Dr. Lekhtman coined three different kinds of grasping.

THE COURT: Three different kinds of?

MR. GERINGER: Holding. That there's relaxed grasping, in which case he said, Oh, the Fujisaki model he made works just fine; nonrelaxed, it's not defined; and grasping, again, undefined.

So what Dr. Lekhtman's test did was say with these three undesigned kinds of grip, we will test what the EMG is at the other side of the diff amp.

He came up with values, and he gave a range and said it has to be greater than two for all grips.

Appendix G

Now, the first question is where is this test found? And it's only in the reexamination file history. It's not in the patent, it's not in the claim construction, it's not in the original file history even. It's also not in any publication that Biosig has cited. Dr. Yanulis cites no publication that [19] quotes his test. So it only appears 17 years after the application was filed.

Your Honor recited some black letter law of indefiniteness. One thing your Honor recited was that it would be measured by from a perspective of a person of skill in the art. The *Howmedica* case and other cases, your Honor, make clear that that is at the time of the application.

THE COURT: What import is the file wrapper then?

MR. GERINGER: The file wrapper can corroborate what meaning the person of skill in the art understood a term to be. And again, the *Howmedica* case -- not cited in my brief, your Honor, I'll give the cite when your Honor is ready -- confirms that. It says this is assessed from the perspective of the person of skill in the art. I might sometimes abbreviate that as the acronym POSA, person of skill in the art.

THE COURT: Don't. Use words.

MR. GERINGER: OK, your Honor, I will.

We patent attorneys often fall into acronyms --

THE COURT: Yes, but I'm not.

MR. GERINGER: I will try to avoid that.

So a person of skill in the art must try to understand the claim at the time the application was filed. That's the time of the person of skill in the art's perspective.

THE COURT: I understand it basically that the file wrapper can give context and understanding. But the whole [20] point of a claim in a set of specifications is that someone who wants to find out if he is required to license something before using it or risking exposure when he's using something and consults a patent sees what he has to know. And he doesn't have to go and explore all kinds of other materials in order to find out what is claimed and what is described.

But I'm also given to understand that there is information in the file wrapper that touches upon the issue of infringement.

MR. GERINGER: Your Honor, the file wrapper is part of the intrinsic evidence when put in evidence. That's the *Vitronics* case from the Fed. Circuit.

THE COURT: On a summary judgment motion I have to assume it is in evidence.

MR. GERINGER: Yes, your Honor. We have educed it. And what the person of skill in the art is charged with doing then is looking at the claim and understanding it in

the context of the patent specification. They can look at the file history, and should if it's in evidence; but the file history cannot cure indefiniteness.

THE COURT: I'll put it this way: What I understand Dr. Yanulis said is that a person of skill in the art, can, through trial and error, come to a spaced relationship that adequately differentiates the EMG from the ECG signals.

And I would put to you the proposition that you may [21] agree with that if you can do something through trial and error and not because it is described, the patent is indefinite.

MR. GERINGER: I would agree, your Honor, that if that trial and error puts a person of skill in the art in an uncertainty, in a zone of uncertainty, then that's anathema.

THE COURT: Suppose through trial and error, which is what Dr. Yanulis says, a person of skill in the art can ascertain at an appropriate spaced relationship.

MR. GERINGER: Your Honor, I think that the specification had given a clear test, and Dr. Yanulis was applying that test, that it's possible.

THE COURT: But it didn't.

MR. GERINGER: It did not, your Honor.

THE COURT: And so it was pure trial and error.

MR. GERINGER: After the fact, 17 years later, yes, your Honor.

THE COURT: If I remember the *Chugai* case, it had to do with a probe that tested for gonorrhea. I may have the wrong case.

MR. GERINGER: Is this the *Amgen Chugai* case, your Honor?

THE COURT: Yeah. Is that the one?

MR. GERINGER: And the electroferritic gel, your Honor?

THE COURT: Yes.

[22] MR. GERINGER: Yes, your Honor.

THE COURT: Well, the gel is the drilling case, the *Halliburton* case.

The *Chugai* case I'm thinking of

MR. GERINGER: There was an *Amgen Chugai* case in which indefiniteness was held because two different kinds of tests, both accepted in the prior art, would give you different results. And the person of skill in the art was left to guess which test do I use. If I test on one hand, I'm inside plane; if I test with the other test, I'm outside. Since they're both accepted, I'm left to guess which test.

Appendix G

THE COURT: Suppose through trial and error you can find an appropriate spaced relationship, but it's not disclosed what test you use or how you go about your trial and error. That's the question I have.

MR. GERINGER: Your Honor, I would say then that the claim just has to stand on its own. If you have the physical structure -- it's an apparatus claim. So if you have the physical structure of that claim, then you're within the scope of that claim.

THE COURT: But how do you know what the physical structure is if you know what is the spaced relationship?

MR. GERINGER: Under your Honor's construction, you were able to construe the term "spaced relationship," and so a person of skill in the art could try to apply that to a device.

[23] THE COURT: But I beg that question because the attorneys didn't not help me and the patent didn't help me.

A spaced relationship did not tell me or anyone what precisely the space should be.

MR. GERINGER: And that's why --

THE COURT: Not even any parameters as to what the space should be.

MR. GERINGER: Yes, your Honor.

THE COURT: Nor whether the spaced relationship on the left side should be the same as the spaced relationship on the right side.

MR. GERINGER: Correct, your Honor.

And a very interesting point, because the file history would tell a person of skill in the art contradictory things to that.

Your Honor's construction of spaced relationship really covers any spaced relationship.

THE COURT: That's right.

MR. GERINGER: So the Fujisaki patent which I'm showing now, Page 4 of Exhibit A, that's why we put the questions, is it in, is it out, just in terms of the physical attributes now.

The claim construction, well, sure, there is a spaced relationship on the left, and a spaced relationship on the right. I could also say that -- it would take me a moment to [24] show your Honor a picture, but Biosig also distinguished asymmetric devices in the file history. The spacing on the left was different than the spacing on the right, and that wouldn't give you a balance.

Again, your honor did not -- we argued that at *Markman*, but your Honor did not adopt it. We argued it

on reconsideration, your Honor denied us and has stayed with a claim construction spaced relationship that we say confirms that a person of skill in the art is left to guess on a structure like Fujisaki.

That physical structure, whether it's in or out, is just not clear, because the claim construction might look like it reads on it, but it surely must be distinguished on some physical basis. What basis? And all that Biosig has suggested is the test for which we have suggested in rebuttal what test? What test is this? How is this test any different than the Halliburton test, where also they suggested a test.

THE COURT: What does the description of the file wrapper say about the test? How does it describe it?

MR. GERINGER: It says that he built a model of the Fujisaki patent. He had a user, undisclosed user, grip it in what he said were three different ways. And he said he measured the EMG, the muscle other than heart signal, on the other end of the diff amp.

So basically using the figure that I've reproduced on [25] Page 5 of Exhibit A, on the right-hand side I've circled in red the diff amp. And those four boxes above represent the electrodes. So the two live electrodes marked 9 and 13 come down into the diff amp, and there's an output.

What Dr. Lekhtman said he did was built a model of Fujisaki, measured the EMG at that output for three different kinds of grips, and he came up with these numbers, your Honor: 10.5, I believe, 1.15, and .85.

Appendix G

THE COURT: So that Fujisaki can be understood as a device that measures differentials produced by holding the handle with different squeeze context, different gasps, while the '753 patent applies the differential from a spaced relationship.

MR. GERINGER: They both do exactly the same physical structure, your Honor.

THE COURT: They might produce the same, but they don't describe the same.

Fujisaki, according to your analysis, depends on grasp strength, while the '753 depends on spacing.

MR. GERINGER: I may have misspoken, your Honor. If I did, I apologize.

But, no, Fujisaki does not say that it depends -- I may have misunderstood.

Yes, your Honor, when Dr. Lekhtman tested his mock-up of the Fujisaki prior art, which he built to some scale he [26] chose, he tested it and said this does not give an adequate heart-to-muscle signal ratio when being grasped actively; only when relaxed.

THE COURT: Who said that, Dr. Lekhtman?

MR. GERINGER: That's what Dr. Lekhtman said about the model he built of Fujisaki.

But the Fujisaki patent is a U.S. patent that's been allowed; it's for detecting heart rate. It was not disclosed originally in the '753 patent. When Dr. Galiana submitted a report, she didn't have Fujisaki in front of her. As it turns out, as your Honor can see, it's just very, very similar. And the circuit inside is, in that sense, the same: Four electrodes, two live, two common, leading to a diff amp.

Your Honor, what Dr. Lekhtman purported to distinguish was the result of the model, was the whereby clause in the claim. He said Fujisaki does not produce the right result as I've measured it, and that's a legal area, your Honor. Because whereby clauses -- and we've cited this to the Court in the *In Re: Schreiber* case.

THE COURT: I'm not dealing with the Fujisaki patent. I'm just noting that there are differences which goes against your argument.

Fujisaki depends on the strength of the grasp, how much intensity the exerciser holds onto the handle. And it doesn't measure accurately when held too tightly. You're [27] saying it measures it more accurately when held loosely.

MR. GERINGER: I am not saying that, your Honor, Dr. Lekhtman said that.

THE COURT: All right.

Well, that's the comparison. The '753 does not base itself on the strength of the grasp.

MR. GERINGER: That's it, your Honor. That's exactly it. The claim does not --

THE COURT: So it's a different patent.

MR. GERINGER: It's not that it's a different patent, your Honor, it's their attempt to distinguish that patent, distinguish that physical structure.

THE COURT: How does the '753 distinguish itself from the Fujisaki?

MR. GERINGER: On the physical structure, your Honor, for the physical structure we've discussed, it does not.

THE COURT: Well, both test a differential, both amplify the differential to get an accurate reading.

MR. GERINGER: Yes, your Honor.

THE COURT: It doesn't help me with the question whether the phrase "a spaced relationship" is clear or ambiguous for purposes of Section 112.

Spacing has to do with the distance between two points. Grasping has to do with not spacing, but intensity of grip. It's different.

[28] MR. GERINGER: That's right.

And the second one is not in the patent anywhere, your Honor. It only comes in after the fact in the reexam. So I would submit --

THE COURT: What do you mean by the second?

MR. GERINGER: You said that there was spacing.

THE COURT: The '753 patent is based on space, the distance between two points. Right?

MR. GERINGER: Yes, your Honor.

But any spacing will do if the claim construction is taken literally.

THE COURT: Any defined space.

MR. GERINGER: Correct.

But Biosig has consistently taken a position, as they must, that, well, no, some spacings don't come inside. The Fujisaki spacing in the middle doesn't qualify. And your Honor might fairly ask, How does my construction of space relationship not read on the Fujisaki device.

THE COURT: So the idea of the strength of the grasp is irrelevant to our discussion.

MR. GERINGER: Should be irrelevant, your Honor. Should not rescue --

Appendix G

THE COURT: I misunderstood you then.

So what in the Fujisaki reads on the '753 patent or vice versa? What in the '753 patent reads on Fujisaki?

[29] MR. GERINGER: In the physical structure, your Honor, every element of Claim One will read on Fujisaki. The noninfringement, your Honor, is deferred on us about the software.

THE COURT: It seems to me they're different because of what we are talking about, difference between space and intensity of grasp.

Where is the space coming out of me? Show me that on the diagram again.

MR. GERINGER: Sure, your Honor.

On the drawing, I've also shown up at Page 4, on the top drawing, the '753, the electrodes have been labeled on the left side 9 and 11; on the right side they are 15 and 13. And Fujisaki, on both sides they are labeled 22 and 21. So each of them has two electrodes on each side with a small gap, with a gap in between.

Your Honor may recall that in the file history, the patentee said the spacing in Fujisaki is wrong; it's too narrow. The patents are too wide; they are wider than the narrow gap in between, and that that is unlike the '753. So we argued for that physical distinction, your Honor.

Appendix G

But as your Honor has ruled, the file history is ambiguous and, therefore, that distinction did not come into the claim construction; and, therefore, cannot save the patent from indefiniteness, because it does not give the clarity that [30] would have saved it. We argued for clarity; they argued for ambiguity. And, therefore, on the physical dimensions, there is no clear distinction, and a person of skill in the art has to guess.

THE COURT: OK. Go ahead.

MR. GERINGER: Would your Honor like to hear anything further on this *Halliburton*-type argument for indefiniteness from Nautilus?

THE COURT: Listen, whatever you want to tell me.

MR. GERINGER: Well, if your Honor has any questions on Halliburton, I would be happy to --

THE COURT: No.

MR. GERINGER: Otherwise --

THE COURT: What I need to know is how do I deal with Yanulis, who said as a matter of fact I can build a physical replica of the distinction. I know I'd get around it. It took me some trial and error to do it, I can do it.

So what import should I give to that?

Appendix G

MR. GERINGER: Three things wrong with Dr. Yanulis' declaration, your Honor, and why it's not an obstacle to summary judgment.

First, indefiniteness is a question of law, and your Honor --

THE COURT: But the cases say that indefiniteness is shown by the failure of clear and convincing evidence to show [31] that a person in the skill of the art can't build what the patent teaches. And Yanulis says he can. So doesn't he overcome that argument?

MR. GERINGER: No, your Honor, because this is not about enablement. We're not saying it's indefinite because you can't ever build it.

THE COURT: I used the wrong term. He can describe it, he can see it, he can understand the spaced relationship; however, he doesn't.

MR. GERINGER: But Dr. Yanulis does several things that are wrong as a matter of law, your Honor.

First, he imports this test into the claim construction, and it's not there. So, in effect, he's seeking to vary the claim construction. He's trying to give it clarity, which you will not find in the claim construction itself.

The claim construction does not define the term "substantially zero EMG signal" as one of this test.

THE COURT: What are we talking, Paragraphs 59 and 73?

MR. GERINGER: I believe it was Paragraph 79. And the Lekhtman declaration, your Honor, that said the Fujisaki patent is different because its pads are fat and its gap is narrow. Yes, it gave a physical distinction. We tried to rely upon that, and the claim construction ruling went against us on that point. That was at Joint Appendix 241, your Honor, Paragraph [32] 79.

THE COURT: I have it.

MR. GERINGER: So while that statement -- we argued that that statement was a disclaimer, we lost. We lost on reconsideration. So that cannot be reimported by Dr. Yanulis and no other distinction can be reimported by Dr. Yanulis.

We also argued in the *Markman*, your Honor, that they had argued that you have to have a ECG --

THE COURT: You wanted me to adopt this language specifically into the interpretation of the *Markman*.

MR. GERINGER: Yes, in the space relationship term, your Honor, yes.

THE COURT: And Mr. Bonella opposed that. And I took his view.

MR. GERINGER: Correct, your Honor.

Appendix G

THE COURT: So he said a space relationship can be anything. It could be this or it could be something else.

MR. GERINGER: And, your Honor, at the time, it was Mr. Bonella's colleague, I believe, Mr. Milcetic, but your Honor warned them that you didn't want them to fall into a trap.

THE COURT: Right.

MR. GERINGER: That construing it in a way that embraces ambiguity could lead to invalidity through vagueness.

THE COURT: And now you're trying to take advantage of [33] that right now.

MR. GERINGER: Absolutely, your Honor.

I'm saying that, yes, without that physical structure distinction, well now we don't have any distinction for the physical structure.

THE COURT: Correct. OK.

So where do we go from there?

MR. GERINGER: I would suggest, your Honor, that perhaps the *Halliburton* argument could be rebutted by my opposing counsel, and then we could turn to the IPXL theory of invalidity, which is related but different.

Appendix G

THE COURT: OK. Let's have Mr. Bonella.

MR. BONELLA: Thank you, your Honor.

I'd like to start by just grounding ourselves where we started with, and that's the ball, which you read. And that is that the patent is presumed to be valid; there's a burden of clear and convincing evidence not that Biosig has, that Nautilus has.

THE COURT: But I don't understand that evidence. It's also called a question of law.

MR. BONELLA: Because a question of law, it's still their burden, OK.

THE COURT: But a law question is different. Law question, you're either right or wrong. A proof question is a quantum of evidence.

[34] So you have Yanulis who says I can do it, or I can understand it, or something. And I don't quite understand.

MR. BONELLA: And that's exactly right, your Honor. Because as your Honor read the law, indefiniteness is addressed to who. And as Mr. Geringer said, it's addressed to the person of ordinary skill in the art.

THE COURT: So all you've got to do is trot out an expert who will express an opinion in a conclusory fashion and a motion can't be granted.

Appendix G

MR. BONELLA: I won't say it's conclusory, your Honor. He read the file history, which is extensive, I think it's 1,000 pages; understood the testing --

THE COURT: Show me what in Yanulis's affidavit shows the basis other than trial and error.

MR. BONELLA: Page 13, he told you that he read the file history, understood the testing that Dr. Lekhtman did that's in the file history, and that's extensive testing.

THE COURT: He's the one that did the Fujisaki, right?

MR. BONELLA: He did testing of many devices. He tested Nautilus devices, he tested some of his own devices, he tested some other on the market, and he tested a device similar that was made according to Fujisaki teaching. So he read those testings, understood those testings, and provided an opinion based upon that.

THE COURT: Let's go through it. You'll teach me [35] that. Because I don't really find that. I don't really find a clear basis for what he comes up with.

MR. BONELLA: So I just wanted to started with there. The question, I think, you posed is is there a zone of uncertainty here such that the public doesn't know whether they're in or outside of this claim.

THE COURT: It should be half inch, one inch, two inches, three inches. What is the space relationship?

MR. BONELLA: And that's exactly it, your Honor.

If we go to the reasons for allowance of the claim, let's go back to what happened in the patent office.

THE COURT: You know, what you're doing is jumping. You started with Yanulis, and I asked you what's the basis for his opinion. He says I find that a person of ordinary skill in the art could readily discern the claimed scope of the '753 patent claims, including the spaced relationship construction adopted by the Court.

So tell me, how does he come to that view?

MR. BONELLA: I'll tell you exactly how he comes to that view. He comes to that view by reviewing the testing and the back and forth of the patent office.

THE COURT: Show me. What does he say?

MR. BONELLA: If we start with the reason the claim was allowed, and if we look to the reasons of allowance, which we have on the screen --

[36] THE COURT: No, no. I'm in Yanulis. I'm looking where in Yanulis there is support for his finding. That's his opinion. "I find" means my opinion is.

MR. BONELLA: Right.

THE COURT: What's the basis of the opinion?

MR. BONELLA: The base of his opinion is the bottom Paragraph 13, where he said the person of ordinary -- he had reviewed the prosecution history, he had reviewed the patent.

And he said: "Person of ordinary skill in the art could discern the claim scope because the EMG signals have to be substantially removed."

That's important language. Because that is exactly why --

THE COURT: That's what's meant by differential amplification. That's how you remove it. You're just repeating circular words.

MR. BONELLA: No, your Honor.

THE COURT: A person of ordinary skill could easily discern the claimed scope, or the claimed scope has to do with a certain spacing, because the EMG signals have to be substantially removed.

Well, that's the function; that's the end gain.

The spaced relationship is the way that it's done. It doesn't tell me what the spacing should be.

It goes on.

[37] And a person of ordinary skill in the art can test for that, just as Dr. Lekhtman did during the reexamination

proceedings. But Dr. Lekhtman was testing for grip strength in a different kind of a spacing. And he did test for spacing; the patent was indistinguishable one from the other.

So what I have here are two conclusions supporting a third conclusion, each one resting on different bases. That's no logic. That's a paid expert, a certain type that one shouldn't have in litigation because he comes to be more embarrassing than useful.

MR. BONELLA: Your Honor, that's actually not correct in terms of the testing.

THE COURT: Then you tell me.

MR. BONELLA: The testing that was done was to test whether the spaced relationship of the electrodes on various devices substantially removed the EMG signals so that you would leave behind the ECG signals.

THE COURT: That is function. That's the result. It's not the method.

Don't do that, Mr. Geringer.

MR. GERINGER: I'm sorry, your Honor.

THE COURT: It's the result you taught on me.

You can't give me a description in the form of a result. If you have a description and you follow it, you should get

the result. But you can't trot out a result and say [38] that's a description. It's not.

MR. BONELLA: But it's a space relationship in conjunction with the circuitry.

THE COURT: What space relationship?

MR. BONELLA: You put the electrodes on the left side and the right side. You have the live and the common. And the electrode relationship and the balancing depends upon the material, the size, the shape, and the configuration. They have to be in a relationship, all those things considered, that's in the file history.

THE COURT: Is there anything that says that in a certain type of material you have to have a two-inch spread?

MR. BONELLA: It's not limited to that.

THE COURT: A one-inch spread? How do you know? You're grabbing with two hands.

First of all, you don't know if the spacing between the two electrodes in the left hand is supposed to be the same as the right hand. No one tells you that.

Second, no one tells you what the composition of the handle is. Not said.

Third, take the left hand. Is the electrode supposed to be between the two middle fingers, the outer first and fourth finger, the thumb underneath and the fingers on top? Where is the spaced relationship?

A spaced relationship means it has to be a certain [39] relationship, but doesn't tell you what the certain relationship is. One inch, an inch and-a-quarter, two inches? One doesn't know. Top, bottom? One doesn't know. Where the palm is, where the fingers are? One doesn't know. And what happens to the other hand?

Now, what Dr. Yanulis says is that through trial and error, which he doesn't describe, one can find a spaced relationship. That may be. But there's no description.

MR. BONELLA: Dr. Yanulis I don't believe testified on trial and error.

But the point, your Honor, you're making, you're saying --

THE COURT: A person of ordinary skill can test for that.

MR. BONELLA: Yes.

THE COURT: Just as Dr. Lekhtman did.

MR. BONELLA: Yes.

THE COURT: What was the test that Dr. Lekhtman used, does he say?

MR. BONELLA: The test is, your Honor, you have the electrode configuration; you have it hooked up to circuitry. You test whether you can remove the EMG signals. And that's done by doing -- and the purpose of this invention is to do it while it's active, not while it's passive, while someone is exercising. So the testing is to hold it while you're actively [40] gripped and you're exercising.

THE COURT: So if I have a small hand, come on to that exercise machine, will that differential, the difference in spacing between the live and the common electrode, differ from a large man? Let's say Tyson Chandler is on the machine, who was an enormous spread.

MR. BONELLA: I'm sure he does.

THE COURT: Is it the same?

MR. BONELLA: That person's hand won't matter because the electrodes are configured to remove EMG through the processing. If you have the electrodes --

THE COURT: Everybody's EMG is different.

MR. BONELLA: It's within a certain zone, your Honor. It's not like one person's EMG is going to be so far off from another person's EMG. The whole idea of the invention is the EMG is to be filtered out.

THE COURT: So what does "spaced" mean?

MR. BONELLA: The spaced relationship between the electrodes is one whereby you remove the EMG

signals. That's exactly what it is. That's why the testing was done; that's why the patent was allowed. It's very easy to test whether the device can remove the EMG signals or not. It's very easy. The Fujisaki one showed that when you have activity --

THE COURT: So what you mean by "spaced relationship" is that whatever the distance between the live and the common [41] electrode that produces the maximum differential amplification of the EMG signal will work. That's the patent.

MR. BONELLA: I don't know if I can use those words, but the key distinction here, your Honor, was a substantial removal of the EMG signals. That's why the examiner said and the reasons for allowance that the patent was being allowed in the reexamination proceedings. That's what the testing showed.

THE COURT: I don't understand the description.

Let's go back into the file wrapper. You show me where it is.

MR. BONELLA: If you turn to Page JA143.

THE COURT: JA143.

MR. BONELLA: 44 is the examiner's reasons for allowance.

THE COURT: I'm on 143.

MR. BONELLA: I'm sorry?

THE COURT: I'm on 143.

MR. BONELLA: OK. So this is in the notice of intent to issue the reexamination certificate. And on 143 at the bottom it says: "Statement of reasons for patentability and/or confirmation. Claims one through 16 are confirmed. The following is an examiner's statements of reasons for confirmation of the claims found patentable in this reexamination proceeding."

On Page JA144 of the joint appendix, it says: [42] Referring to Claim One, the claim is confirmed over the prior art that was explained in the request -- and that includes the Fujisaki patent -- and determined to raise a substantial new question of patentability in the order granting reexamination and over the prior art that was applied and discussed by the examiner --

THE COURT: Slow down. Go ahead.

MR. BONELLA: -- in the present reexamination proceeding. Because the prior art does not explicitly teach a heart rate monitor for use by a user in association with an exercise apparatus and/or exercise procedures whereby a first electromyogram signal -- that's the EMG -- will be detected between said first live electrode and said first common electrode. And a second electromyogram signal, of substantially equal magnitude and phase to said first electromyogram signal, will be detected between said second live electrode and said second common electrode,

so that when said first electromyogram signal is applied to the said first terminal, and said second electromyogram signal is applied to said second terminal, the first and second electromyogram signals will be subtracted from each other to produce a substantially zero electromyogram signal at the output of said differential amplifier in combination with the remaining elements or features of the claimed invention.

THE COURT: I rule, Mr. Bonella, that this is all a [43] description of the desired result and not a description of any invention that is calculated it followed to produce that result and, therefore, violates the requirement of specificity in Section 112.

Now, anything else in this file wrapper that you wish me to observe?

MR. BONELLA: I'm sorry, I didn't understand the ruling, your Honor.

THE COURT: You can have it repeated.

Martha, would you repeat it please.

(Record read)

MR. BONELLA: I'm sorry, I'm just not understanding the ruling, your Honor.

Are you saying that -- I mean this was the reason it was --

THE COURT: I'm saying what I said. You can have it repeated if you like.

MR. BONELLA: OK.

(Record read)

MR. BONELLA: I just note that the reasons for allowance here are contained within the claimant of itself. And so to say that --

THE COURT: You have to do two things. You have to distinguish yourself from the prior art and you have to show a claim of invention.

[44] MR. BONELLA: Yes.

THE COURT: I find that you do neither.

MR. BONELLA: And I note for the record that -- the Fujisaki record, that Dr. Yanulis pointed out another distinction based upon Fujisaki over the Fujisaki reference.

THE COURT: Where?

MR. BONELLA: Where? In his declaration. If you look at Page 14 of his declaration, sir.

THE COURT: Yes.

MR. BONELLA: He says that --

Appendix G

THE COURT: Wait a minute. I'm on Page 14.

MR. BONELLA: OK. It explains that the Fujisaki patent is not disclosed, at least the EMG whereby clause or the means for calculating.

THE COURT: I'm sorry, I missed that. Say it again.

MR. BONELLA: I'm sorry.

THE COURT: Where are you reading from?

MR. BONELLA: The second paragraph on Page 14 of his declaration in the section "Anticipation Issues," sir.

THE COURT: Yes.

"It is my opinion that the patent claims are not anticipated by Fujisaki, et al. I agree with the patent office that the claims are patentable over Fujisaki, et al. As I described above, the Fujisaki patent does not disclose at least the claimed EMG whereby clause or the means for calculating.

[45] Fujisaki discloses using each time interval measured and does not disclose validity checks on the data, much less those claimed in the '753 patent algorithms."

I'll stay with you, Mr. Bonella. You can show me all the reasons that lead to these conclusions.

MR. BONELLA: So he says that they don't disclose the time interval measure. So when you exclude the means

of function clauses, one of the structures is an algorithm that has a validity check on the date in the figures. There's a 15 percent change between beats per minute.

THE COURT: But we're not talking about that; we're talking about the spaced relationship.

MR. BONELLA: Right. But there is a --

THE COURT: We're not talking about time.

MR. BONELLA: But there's a distinction between the Fujisaki.

And then he says the EMG whereby clause is not disclosed because -- and he goes on down the paragraph, the next paragraph.

THE COURT: We had the whereby clause in the last paragraph, didn't we, on a previous page?

MR. BONELLA: Right, but he provides some of the explanation here.

THE COURT: Where? I don't understand.

We're not talking about time; we're not talking about [46] how long the point of contact is between the hand -- each hand and the bar. We're talking about spaced relationship. I don't see anything in this paragraph that deals with spaced relationship.

MR. BONELLA: He's explaining the distinction is not spaced relationship between Fujisaki and the '753 patent. That is not the distinction. The distinction is completely different.

THE COURT: Mr. Geringer produced a point where there was a spaced relationship, was said to be in the Fujisaki paragraph. We're talking about that, it seems to me relevant. If we're talking about something else, it's not in the motion. The motion focuses on spaced relationship.

MR. BONELLA: The spaced relationship, your Honor, the technology, the spaced relationship is tied to the removal of the EMG. If you have a spaced relationship, it will --

THE COURT: We're repeating ourselves, Mr. Bonella. That's what we just ruled on. It's what I just said before. If there's something different on Page 14 that would lead me to a different conclusion, I don't think so. It references back to the previous page here.

MR. BONELLA: He explains that the detection removal of the EMG signals are a function of the electrode size, shape, spacing, material, and circuitry. Fujisaki --

THE COURT: And that critical element of spacing is [47] what is vague, among other things, but that's the one that's focused on.

Do I have a correct understanding of your motion, Mr. Geringer?

MR. GERINGER: Yes, your Honor.

THE COURT: So let's not talk about other things. Spacing is a material element. You don't solve that material element; you break the chain.

MR. BONELLA: The spacing is tied to the removal of EMG. That's what it's about.

THE COURT: Of course that's it. That's the function, the function of the result -- I'm not repeating. I ruled that there's nothing additional that you've just told me.

MR. BONELLA: OK. And, your Honor, also note that the only evidence of record we have though is of the file history and Dr. Yanulis's declaration.

THE COURT: I'll look at anything else in the file history that bears upon this question, but it seems to me that we have it here. You can't prove a point by conclusions. You have to prove a point by reasons, by descriptions. And there is nothing of that nature in Dr. Yanulis's declaration.

Is there anything else I need to hear?

MR. BONELLA: Well, the file history explains that the spaced relationship is a function of the size of the electrodes, the geometry --

[48] THE COURT: Show me.

MR. BONELLA: I believe it's JA201, your Honor.

THE COURT: JA201. All right.

MR. BONELLA: You see at the bottom of the paragraph it's talking about --

THE COURT: "The size, shape, material, and spacing of the active electrodes cannot be standardized for all exercise handles. Analyses must be made on a machine-specific basis to find best ECG/EMG ratio for each machine. That is why all the infringers are using different configurations of the EMG balanced electrodes on their equipment."

MR. BONELLA: And you notice that none of the --

THE COURT: Yes, go ahead.

MR. BONELLA: None of the infringers were using a Fujisaki structure, your Honor. None of them have large cylindrical-shaped electrodes on their equipment. None of them.

THE COURT: That doesn't make any difference.

So the statement is the size, shape, material, and spacing.

MR. BONELLA: That's the relationship.

THE COURT: All are material causative functions. I've got the wrong word. All material elements in

producing an appropriate ratio of electrocardiogram signals to electromechanical signals. But we don't know the relationship [49] among these. The size; what size? The shape; what shape? The material; what materials? The spacing; what spacing? It's not described.

MR. BONELLA: The other claim in terms of functional relationships, your Honor. And the claim says that the functional relationship is the removal of the EMG. If you have these things in the relationship that will remove the EMG, that is how the invention was explained to the patent office, that's how they found it to be patentable, and that's the relationship.

THE COURT: The purpose of the description clause is to tell a person skilled in the art how a certain desired result is achieved different and better from the way it had been done in the past.

There's nothing in this patent in its specifications or its claims or the file wrapper that fills this function, this requirement, of a specific description. In words of the statute, "particularly pointing out and distinctly claiming the subject matter which the applicant regards as his invention. There is nothing here that satisfies the requirement of full, clear, concise, and exact terms as to enable any person skilled in the art to which it pertains and with which it is mostly nearly connected to make and use the same."

Looking at *Halliburton* again, the claim from the patent described that a gel would solve the problem experienced [50] in drilling that would effectively remove

drill cuttings from the well bore, cool and lubricate the drill bit, support the drill pipe and drill bit, and provide a hydrostatic head to maintain the integrity of the well bore walls and prevent well blowouts.

That's from the patents, and it's Page 1245 of the opinion of Chief Judge Michel.

And the claim was that a certain gel would do it, a fragile gel. Judge Michel read the statute, quoted the way I did. He cited the Supreme Court decision of *United Carbon Company v. Binney & Smith Co.*, 317 U.S. 228 at Page 236, 1942. In the rule that the statute requirement of particularity and distinctness in claims is met only when the claims clearly distinguish what is claimed and what went before in the art and clearly circumscribed was foreclosed from future enterprise.

Chief Judge Michel expressed his understanding that difficulties in defining claims are not important if the meaning of the claim is discernible, even though the task may be formidable, and a conclusion may be one of which reasonable persons will disagree, would have held the claims sufficiently clear to avoid invalidity on indefiniteness grounds.

Proof of indefiniteness, he says, requires such an exacting standard, because claim construction often poses a difficult task over which expert witnesses, trial courts, and even the judges of this Court, may disagree. Nevertheless, [51] this standard is met where an accused infringer shows by clear and convincing evidence that a

skilled artisan could not discern the boundaries of the claim based on the claim language, the specification, and prosecution history, as well as her knowledge of the relevant area.

That's at Pages 1249 and 1250.

And I've ruled that the hypothetical skilled artisan has nothing in the specifications or the claim or the file history to teach that expert this proper spacing that should be used effectively to subtract the electromechanical signals a person emits from the electrocardial signals that a person emits.

Just as in the *Halliburton* case, there was no definition of the fragility of the gel. And the fact that Halliburton can articulate a definition supported by the specification reducing it to words, the claim remained indefinite because a person skilled in the art could not translate the definition the Court held into meaningfully precise claim scope. The Court agreed with that. And I've read these portions before and I don't need to read it again.

Accordingly, I grant the motion for summary judgment, holding that the specification, the claims, and the file history do not supply the requirement of a clear written description required by Section 112 of Title 35 of the United States Code.

[52] Now, that will invalidate Claims 1 to 11, Mr. Geringer.

What about the rest of the wrist dependent?

MR. GERINGER: Your Honor, only Claims 1 and 11 are asserted.

MR. BONELLA: That's correct, your Honor.

THE COURT: All right.

So I need to go onto the alternative ground, right?

MR. GERINGER: If your Honor wishes; although it is redundant upon the result.

THE COURT: Well, I do wish to.

So that grants the motion.

The complaint is dismissed, and judgment is granted for the defendant.

MR. GERINGER: Thank you, your Honor.

THE COURT: A summary order will follow.

These are my findings and conclusions.

MR. GERINGER: Your Honor, may I bring up a copy of Exhibit A to the clerk?

THE COURT: Yes. Exhibit A now is the entire state of particular depictions that were used in the argument.

MR. GERINGER: Yes, your Honor.

THE COURT: OK. So the record will be the motion papers and this Exhibit A.

Mr. Bonella, any problem with that?

[53] MR. BONELLA: No, your Honor.

THE COURT: Is there anything else I need to do today?

MR. BONELLA: Just to be clear for the record, those are his demonstrative exhibits.

THE COURT: Sorry?

MR. BONELLA: Those are his demonstrative slides though, they are not --

THE COURT: I think that's right.

Isn't that so?

MR. GERINGER: That is correct, your Honor.

MR. BONELLA: Just so it's clear, they are not being admitted into evidence or anything.

MR. GERINGER: Correct, your Honor. It is not new evidence.

MR. BONELLA: The only issue would be the counterclaims for your Honor.

MR. GERINGER: Which we will discuss in the hallway, but I believe that, your Honor, we would be willing to dismiss those without prejudice.

THE COURT: Counterclaims are dismissed without prejudice.

MR. GERINGER: Thank you, your Honor.

THE COURT: OK. Thank you very much.

* * *

OPPOSITION BRIEF

Supreme Court, U.S.
FILED
NOV 22 2013
OFFICE OF THE CLERK

No. 13-369

In the Supreme Court of the United States

NAUTILUS, INC.,

Petitioner,

v.

BIOSIG INSTRUMENTS, INC.,

Respondent.

ON PETITION FOR WRIT OF CERTIORARI TO THE UNITED STATES COURT OF APPEALS FOR THE FEDERAL CIRCUIT

BRIEF IN OPPOSITION TO PETITION FOR WRIT OF CERTIORARI

MICHAEL J. BONELLA
Counsel of Record
DANIEL C. MULVENY
JENNA M. PELLECCHIA
TOD A. KUPSTAS
KESSLER TOPAZ MELTZER
& CHECK LLP
280 King of Prussia Road
Radnor, PA 19087
(610) 667-7706
mbonella@ktmc.com
dmulveny@ktmc.com
jpellecchia@ktmc.com
tkupstas@ktmc.com

Counsel for Respondent

GibsonMoore Appellate Services, LLC • 421 East Franklin Street, Suite 230
Richmond, VA 23219 • 804-249-7770 • www.gibsonmoore.net

QUESTIONS PRESENTED

I. Whether Petitioner has shown that the Federal Circuit's test for patent indefiniteness under 35 U.S.C. § 112, ¶2 conflicts with this Court's precedent in light of the U.S. Patent and Trademark Office recently informing this Court that there was no conflict.

II. Whether the Federal Circuit erred in giving respect to the presumption of validity specified by Congress in 35 U.S.C. § 282 in considering the invalidity defense of indefiniteness under 35 U.S.C. §112, ¶2.

CORPORATE DISCLOSURE STATEMENT PURSUANT TO SUPREME COURT RULE 29.6

Biosig Instruments, Inc. has no parent corporation, and no publicly held corporation owns 10% or more of its stock.

TABLE OF CONTENTS

Page

QUESTIONS PRESENTED i

CORPORATE DISCLOSURE STATEMENT ii

TABLE OF CONTENTS iii

TABLE OF AUTHORITIES v

INTRODUCTION 1

STATEMENT OF THE CASE 3

A. THE '753 PATENTED INVENTION 5

B. THE PROSECUTION HISTORY INCLUDING THE PATENT OFFICE'S REJECTION OF PETITIONER'S ARGUMENTS REGARDING FUJISAKI ET AL. 12

C. THE CLAIMS HAVE NOT UNDERGONE "METAMORPHOSES" 17

REASONS FOR DENYING THE PETITION 22

I. PETITIONER FAILS TO PROVIDE A BASIS FOR GRANTING ITS PETITION 22

A. PETITIONER'S ARGUMENTS FAIL BECAUSE THIS COURT RECENTLY DENIED A PETITION FOR CERTIORARI AFTER FULLY CONSIDERING THE VERY SAME ARGUMENTS 22

B. PETITIONER FAILS TO SHOW THAT THE FEDERAL CIRCUIT'S VIEW IS INCOMPATIBLE WITH THIS COURT'S INTERPRETATION ... 24

C. THE FEDERAL CIRCUIT HAS NOT MISINTERPRETED THE PATENT STATUTE ... 26

D. THE FEDERAL CIRCUIT HAS NOT IMPROPERLY ALLOWED VAGUE CLAIMS TO BE CURED THROUGH CLAIM CONSTRUCTION ... 28

E. PETITIONER'S DATED CASE FROM THE SECOND CIRCUIT PROVIDES NO BASIS FOR GRANTING ITS PETITION ... 29

II. THE FEDERAL CIRCUIT DID NOT COMMIT LEGAL ERROR BY GIVING RESPECT TO THE PRESUMPTION OF VALIDITY IN CRAFTING ITS INDEFINITENESS TEST ... 30

III. THIS CASE IS NOT AN IDEAL VEHICLE FOR CONSIDERING INDEFINITENESS ... 32

IV. THERE IS NO ERROR REGARDING INDEFINITENESS THAT HAS DAMAGED OUR PATENT SYSTEM ... 34

CONCLUSION ... 35

TABLE OF AUTHORITIES

Page(s)

Cases

Applera Corp. v. Enzo BioChem, Inc.,
131 S. Ct. 3020 (2011).....*passim*

Applera Corp. v. Enzo Biochem, Inc.,
131 S. Ct. 847 (2010)..... 23

Biosig Instruments, Inc. v. Nautilus, Inc.,
715 F.3d 891 (Fed. Cir. 2013).....*passim*

Eibel Process Co. v.
Minnesota & Ontario Paper Co.,
261 U.S. 45 (1923)..... 25

Exxon Research & Eng'g Co. v.
United States,
265 F.3 1371 (Fed. Cir. 2001)..... 27, 31

Festo Corp. v.
Shoketsu Kinzoku Kogyo Kabushiki Co.,
535 U.S. 722 (2002)..... 26

Halliburton Energy Servs., Inc. v. M-I LLC,
514 F3.d 1244 (Fed. Cir. 2008)..... 27

Markman v. Westview Instruments, Inc.,
517 U.S. 370 (1996)..... 2, 26, 27, 31

Microsoft Corp. v. i4i Ltd. Partnership,
131 S. Ct. 2238 (2011)..... 30, 31

Minerals Seperation, Ltd. v. Hyde,
242 U.S. 261, 270 (1916)..... 1-2, 25, 31

Norton Co. v. Bendix Corp.,
449 F.2d 553 (2d Cir. 1971)..... 29

Star Sci., Inc. v. R.J. Reynolds Tobacco Co.,
537 F.3d 1357 (Fed. Cir. 2008) 27

United Carbon Co. v. Binney & Smith Co.,
317 U.S. 228 (1942) 31

Statutes

35 U.S.C. § 112, ¶1 ..... 29, 30

35 U.S.C. § 112, ¶ 2 ..... 4, 27

35 U.S.C. § 282 30

35 U.S.C. § 282(a) 3

Other Authorities

Reply Brief of Petitioner Applera Corp.,
Applera Corp. v. Enzo Biochem, Inc.,
131 S. Ct. 3020 (2011), No. 10-426
(November 22, 2011) 24

Brief for the United States as Amicus Curiae,
Applera Corp. v. Enzo Biochem, Inc.,
131 S. Ct. 3020 (2011), No. 10-426
(May 17, 2011) 23, 28, 31, 33

Initial Brief of Respondent Enzo Biochem, Inc.,
Applera Corp. v. Enzo Biochem, Inc.,
131 S. Ct. 3020 (2011), No. 10-426
(November, 11, 2010) 24

Brief of Public Knowledge and the
Electronic Frontier Foundation as Amici Curiae
for the Petitioner, *Nautilus, Inc. v.*
Biosig Instruments, Inc., No. 13-369
(2013) 34

INTRODUCTION

Petitioner essentially presents the same issue regarding indefiniteness that was recently presented to this Court in 2011. After requesting and receiving the United States Patent and Trademark Office's ("USPTO") opinion on the issue in that case, this Court denied the petition for certiorari on the indefiniteness standard. *Applera Corp. v. Enzo BioChem, Inc.*, 131 S. Ct. 3020 (2011). As nothing has changed, there is no reason to grant the Petition in this case.

Petitioner fails to present a compelling reason that this case merits this Court's attention. Petitioner lost on appeal because it failed to prove that Respondent's U.S. Patent No. 5,337,753 ("the '753 Patent") was invalid for indefiniteness. Petitioner did not lose because the Court applied the wrong analysis. Rather, Petitioner lost because Respondent showed, and the Federal Circuit agreed, that the intrinsic record contains a bright-line test using standard electrical equipment such as an oscilloscope and meters for determining what structures are within the claim scope. Petitioner has no real response on the merits of the case. Petitioner does not even mention the oscilloscope/meter testing in its Petition, which was the basis of the Federal Circuit decision. Moreover, Petitioner has *never* contended that it cannot reproduce the oscilloscope/meter testing or that it creates any zone of uncertainty.

Regarding the legal standards, Petitioner is wrong that the Federal Circuit has adopted an indefiniteness standard that conflicts with this Court's precedent. For example, in *Minerals*

Separation, Ltd. v. Hyde, this Court explained that "the certainty which the law requires in patents *is not greater than is reasonable*, having regard to their subject matter." 242 U.S. 261, 270 (1916) (emphasis added). Likewise, the Federal Circuit explained in this case, a claim is indefinite if "reasonable efforts at claim construction result in a definition that does not provide sufficient particularity and clarity to inform skilled artisans of the bounds of the claim." *Biosig Instruments, Inc. v. Nautilus, Inc.*, 715 F.3d 891, 898 (Fed. Cir. 2013). There is no conflict between this Court and the Federal Circuit on the indefiniteness standard.

The Petition should further be denied because Petitioner offers a "multiple reasonable interpretation" indefiniteness standard that is not contained anywhere in this Court's precedent or in the Federal Circuit's jurisprudence. Moreover, Petitioner's "multiple reasonable interpretation" test conflicts with this Court's decision in *Markman v. Westview Instruments, Inc.* 517 U.S. 370 (1996). In *Markman*, this Court recognized that patents are legal instruments that necessarily require construction by a court. *Id.* at 387-388. Yet, Petitioner offers a conflicting indefiniteness standard, as Petitioner requires patent claims to be construed prior to a legal proceeding. Under Petitioner's view, if a defendant is able to concoct multiple "reasonable interpretations," then a patent is simply invalid. Thus, Petitioner urges this Court to make a dramatic change in well-established patent law that would significantly weaken, not strengthen the patent system.

Finally, Petitioner's argument that the presumption of validity somehow does not apply to an indefiniteness challenge is simply contrary to the plain language of 35 U.S.C. § 282(a). And the presumption applies to any factual showings required in challenging the validity of issued patents. The Federal Circuit, therefore, did not commit error by giving respect to the presumption of validity, mandated by § 282(a), in crafting its indefiniteness test.

STATEMENT OF THE CASE

Respondent Biosig Instruments, Inc. is a medical device and exercise equipment company that makes, *inter alia*, heart rate monitors. Petitioner, Nautilus, Inc., is a multinational exercise equipment company. The parties' dispute stems from Respondent having produced, under a non-disclosure agreement and for testing purposes heart rate monitor products to Stairmaster, a predecessor of Petitioner, and having the patented technology rejected by Petitioner's predecessor, only to find out later that Petitioner and its predecessors were using the claimed technology. After Respondent discovered that Petitioner was indeed using Respondent's patented technology, Respondent brought suit for patent infringement in 2004.

After the litigation was commenced, it was dismissed without prejudice subject to a tolling agreement because Petitioner twice requested *ex parte* reexamination of the '753 Patent by the USPTO. Both requests were granted. After considering both of Petitioner's reexamination requests, the USPTO confirmed that the '753 Patent claims were patentable without

amendment. Petitioner later filed a third request for *ex parte* reexamination, which the USPTO denied for failing to raise a substantial new question of patentability.

With its '753 Patent confirmed patentable, Respondent returned to court to pursue its infringement claims against Petitioner. At the claim construction phase, the trial court construed all of the disputed claim terms. Petitioner moved for summary judgment of, *inter alia*, invalidity for indefiniteness of the claim term "spaced relationship", which the court granted.

On appeal, the Federal Circuit reversed the trial court's finding that "spaced relationship" was indefinite under 35 U.S.C. § 112, ¶ 2. Specifically, the Federal Circuit found that "it has been shown that skilled artisans can readily ascertain the bounds of the 'spaced relationship' through tests using standard equipment." *Biosig Instruments, Inc.*, 715 F.3d at 903. The Federal Circuit detailed the intrinsic record and explained that "a skilled artisan could apply a test and determine the 'spaced relationship' as pertaining to substantially removing electromyogram ("EMG") signals. Indeed, the test would have included a standard oscilloscope connected to the inputs and outputs of a differential amplifier to view the signal wave forms and to measure signal characteristics." *Id.* at 901. Finding support in the intrinsic record—the patent itself and its prosecution history at the USPTO—the court of appeals found that the '753 Patent disclosed inherent parameters of the claimed apparatus which would allow a person of ordinary skill in the art to understand the metes and bounds of "spaced relationship." The Federal Circuit then remanded

the case to the trial court, and Petitioner sought this Court's review, seeking to change the indefiniteness standard.

A. THE '753 PATENTED INVENTION

Electrocardiogram ("ECG") signals are generated by the heart and are indicative of heart rate (Federal Circuit Joint Appendix (hereinafter "Fed. Cir. JA") 1039-1040 at ¶¶33-35). Generally, heart rate monitors detect and use ECG signals to determine heart rate. EMG signals produced by skeletal muscles are not indicative of heart rate (Fed. Cir. JA1041 at ¶36). When a person is exercising, hand EMG signals are intensified (Fed. Cir. JA232 at ¶35). Prior art heart rate monitors were hampered by the interference between hand EMG signals and ECG signals because the EMG signals can mask the ECG signals, making measurement of heart rate difficult or not accurate (Fed. Cir. JA232 at ¶¶35-36).

Dr. Lekhtman, the inventor of the '753 Patent, solved this problem of accurately measuring heart rates while exercising by, *inter alia*, substantially removing EMG signals from ECG signals, so that the ECG signals could be processed for heart rate determination (Fed. Cir. JA12 at 1:28-33). Based on his invention, Respondent's claim 1 recites a "heart rate monitor for use by a user in association with exercise apparatus and/or exercise procedures" (Fed. Cir. JA14 at 5:17-18). The first and third through fifth claim elements describe the claimed elongate member and the electrodes, as they recite:

> an elongate member;
>
> ***
>
> said elongate member comprising a first half and a second half;
>
> a first live electrode and a first common electrode mounted on said first half in spaced relationship with each other;
>
> a second live electrode and a second common electrode mounted on said second half in spaced relationship with each other.

(Fed. Cir. JA14 at 5:20, 5:26-33). Although the "spaced relationship" is further defined by additional claim language regarding detecting and removing EMG signals, these claim elements can be understood with reference to the patent specification example reproduced below.

Annotated Figure 1
Showing Elongate Member and Electrodes

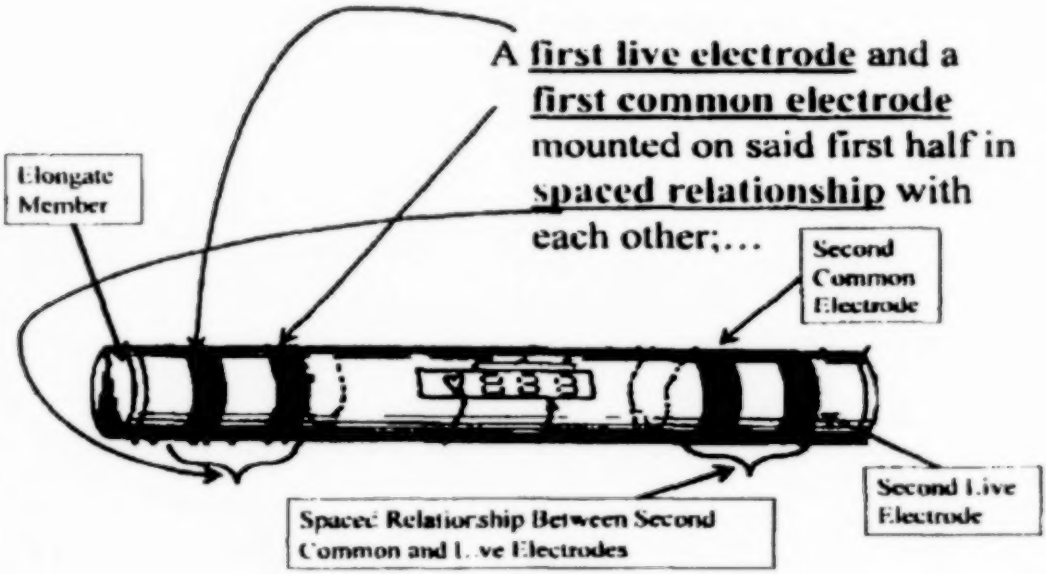

Claim 1 also recites "electronic circuitry including a difference amplifier having a first input terminal of a first polarity and a second input terminal of a second polarity opposite to said first polarity," which is illustrated below (Fed. Cir. JA14 at 5:21-25). Generally, a difference or differential amplifier is designed to amplify the difference between signals (Fed. Cir. JA1035 at ¶23).

Annotated Figure 2
Depicting a Difference Amplifier

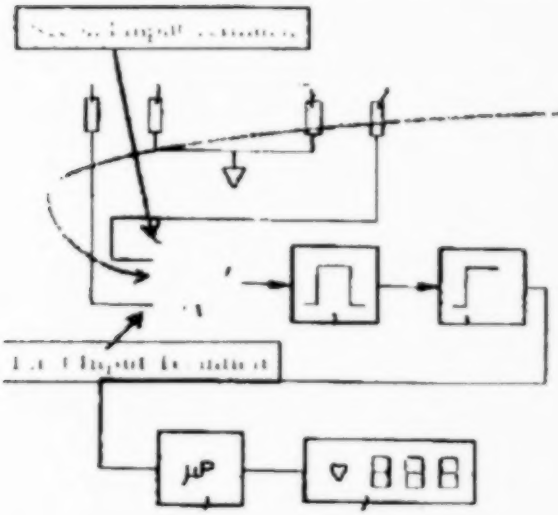

Electric circuitry including a difference amplifier having a first input terminal of a first polarity and a second input terminal of a second polarity opposite to said first polarity;...

Claim 1 further specifies that the electrodes are electrically connected to the differential amplifier (Fed. Cir. JA14 at 5:33-40). Claim 1 also has an "EMG Whereby Clause" at column 5, lines 48-61 and an "ECG Whereby Clause" at column 5, line 62 through column 6, line 7 (Fed. Cir. JA14). As shown in the annotation of Figure 2 below, the "EMG Whereby" clause specifies the capability for detecting hand EMG signals of substantially equal magnitude and phase and substantially removing those EMG signals with the difference amplifier (Fed. Cir. JA14 at 5:42-6:7).

Annotated Figure 2 Showing EMG Whereby Clauses

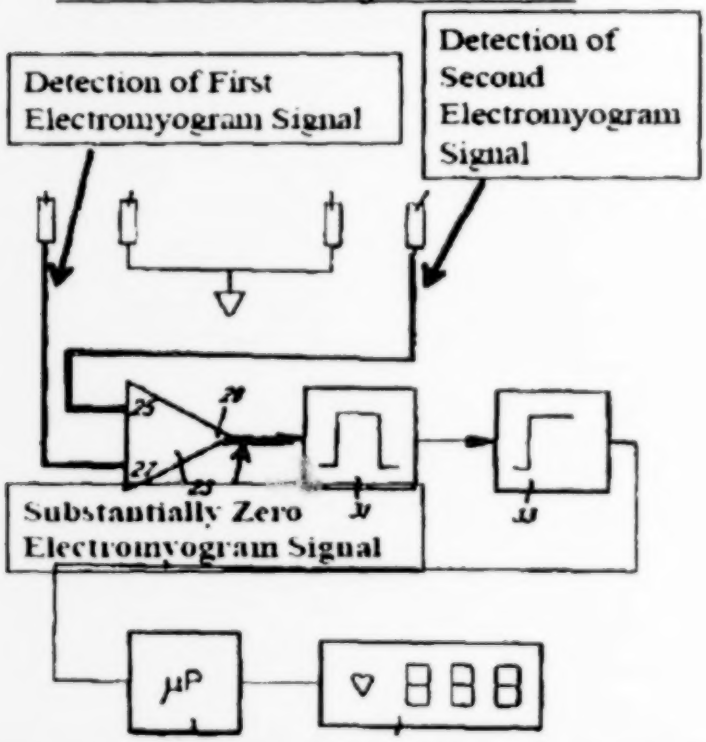

Whereby, a **first electromyogram signal** will be detected between said first live electrode and said first common electrode, and a **second electromyogram signal**, of substantially equal magnitude and phase to said first electromyogram signal will be detected between said second live electrode and said second common electrode;... so that, when said first electromyogram signal is applied to said first terminal and said second electromyogram signal is applied to said second terminal, the first and second electromyogram signals will be subtracted from each other to **produce a substantially zero electromyogram** signal at the output of said difference amplifier;...

The "ECG Whereby" clause specifies that the monitor has the ability to detect heart ECG signals of "substantially equal magnitude" but of "opposite phase" and the difference amplifier can process these signals for heart rate determination (Fed. Cir. JA14 at 5:62-6:7).

Annotated Figure 2
Showing ECG Whereby Clauses

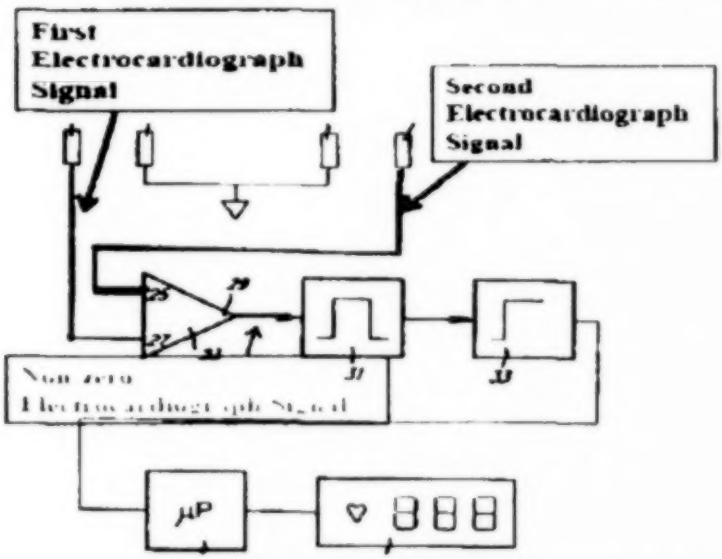

And whereby a **first electrocardiograph signal** will be detected between said first live electrode and said first common electrode and a **second electrocardiograph signal**, of substantially equal magnitude but of opposite phase to said first electrocardiograph signal will be detected between said second live electrode and said second common electrode, so that, when said first electrocardiograph signal is applied to said first terminal and said second electrocardiograph signal is applied to said second terminal, the first and second electrocardiograph signals will be added to each other to produce a non-zero electrocardiograph signal at the output of said difference amplifier;...

The claimed heart rate monitor has the capability of substantially removing EMG signals during exercise, so that ECG signals can be processed for accurate heart rate calculations. This can be understood with reference to Figure 8 from Dr. Galiana's declaration reproduced below (Fed. Cir. JA1051). As shown, "1" and "2" are differential amplifier input signals from live electrodes containing EMG signals that mask ECG signals (Fed. Cir. JA1050-51 at ¶¶54-55). But the difference amplifier output signal "3" removes EMG signals leaving the ECG signal, and the heart rate can be determined from the time between the ECG signal "R" amplitudes (Fed. Cir. JA1051 at ¶55).

Annotated Figure 8 from Dr. Galiana's Declaration (Fed. Cir. JA1051)

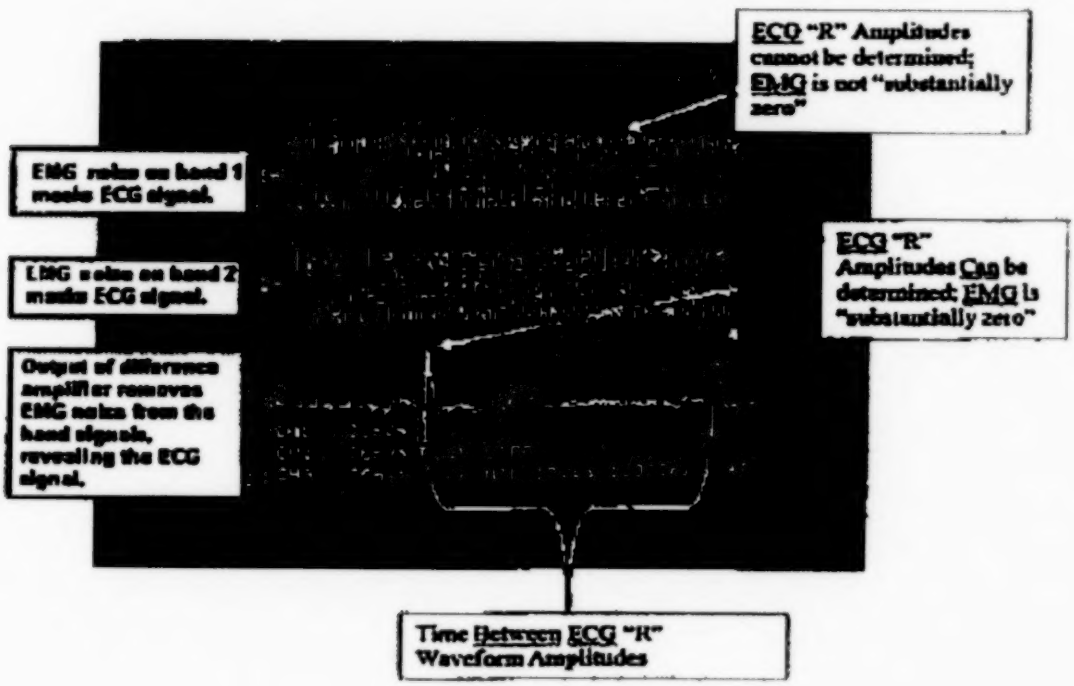

B. THE PROSECUTION HISTORY INCLUDING THE PATENT OFFICE'S REJECTION OF PETITIONER'S ARGUMENTS REGARDING FUJISAKI ET AL.

Petitioner substantially misrepresents the prosecution history with respect to Fujisaki et al. Petitioner instituted two reexamination proceedings based on the Fujisaki et al. reference and in both instances the USPTO confirmed the patentability of Respondent's claims without amendment (Fed. Cir. JA1123-1124). Fujisaki et al. discloses a heart rate monitor having "axially aligned" "cylindrical," closely-spaced electrodes (Fed. Cir. JA558 at 1:45-48), as shown in Figure 1 below, and a differential amplifier, as shown in Figure 3 (Fed. Cir. JA557 at reference number 31).

Fujisaki et al. Figure 1 (Fed. Cir. JA555)

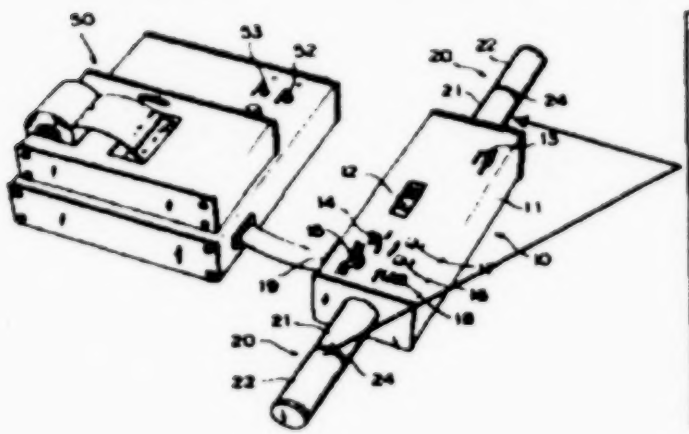

Axially aligned, large cylindrical electrode pairs (21, 22) separated by small spacer 24. **Fujisaki**

During the reexamination proceedings, Respondent distinguished Fujisaki et al. by explaining that the claims were patentable over Fujisaki et al. because (i) Fujisaki et al. was completely silent regarding EMG signals; (ii) one of

ordinary skill in the art would not understand Fujisaki et al.'s large-cylindrical electrodes with small spacing to have the capability of removing EMG signals; and (iii) testing showed that Fujisaki et al.'s electrode configuration did not substantially remove EMG signals (Fed. Cir. JA185-186, Fed. Cir. JA305-337). As Respondent pointed out, Fujisaki et al. "does not even mention EMG," much less describe removing EMG signals as claimed, and therefore Respondent's claims were not anticipated or obvious in view of Fujisaki et al. (Fed. Cir. JA197).

Dr. Lekhtman recognized that EMG removal is dependent on electrode size, spacing, width, material, and geometry (Fed. Cir. JA233 at ¶41, Fed. Cir. JA239 at ¶69, Fed. Cir. JA201, Fed. Cir. JA238-239 at ¶68(c)). Dr. Lekhtman explained in his reexamination declaration that "the strength (amplitude or magnitude) of an EMG measurement is proportional to the space between the active and ground electrodes and the size of the electrodes" (Fed. Cir. JA233 at ¶41, Fed. Cir. JA239 at ¶69, Fed. Cir. JA238-39 at ¶68(c)). As Dr. Lekhtman further explained, Fujisaki et al.'s large-cylindrical electrodes with small spacing have "the doubly detrimental effects of (a) magnifying the strength of the detected EMG relative to the detected ECG, thus reducing the ECG/EMG signal to noise ratio and (b) increasing the inequality and time dependent variance between left and right hand EMG" (Fed. Cir. JA233-34 at ¶43). Dr. Lekhtman also explained that a person of ordinary skill in the art would conclude that Fujisaki et al. was using large electrodes to increase the ECG signal amplitude, as opposed to removing EMG signals (Fed. Cir. JA241 at ¶77).

During the reexamination, Respondent further provided testing showing that Fujisaki et al.'s electrode configuration did not remove EMG signals during exercise. Dr. Galiana described standard electrical testing that merely requires taking measurements during exercise conditions at the differential amplifier inputs and output to determine whether a device has an electrode configuration and differential amplifier that can substantially remove EMG signals (Fed. Cir. JA1050 at ¶54, Fed. Cir. JA210). As Respondent explained during the reexamination proceeding, an "oscilloscope was connected to both the inputs and the output of a differential amplifier" (Fed. Cir. JA210, Fed. Cir. JA253 at ¶127). No novel test equipment is required, as the testing can be conducted with a standard oscilloscope or electrical meter (Fed. Cir. JA210, Fed. Cir. JA1050 at ¶54, Fed. Cir. JA248 at ¶110, Fed. Cir. JA253 at ¶127). Oscilloscopes are standard equipment that have been in existence since well before the 1980's and can be used to view electrical signal wave forms and to determine electrical signal characteristics such as signal amplitude and signal frequency. For ease of understanding, a testing arrangement is shown below with reference to Figure 2 of Respondent's '753 Patent.

Oscilloscope and '753 Patent
Figure 2 (Fed. Cir. JA1109)

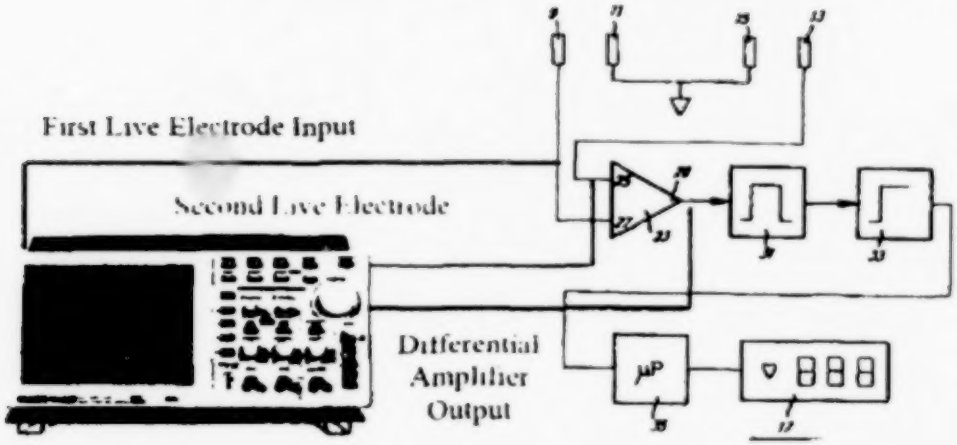

Petitioner incorrectly shows pictures of various electrode configurations and alleges that "it is not readily apparent why" two electrode configurations are covered by the claim and why two are not (Petition for Writ of Certiorari (hereinafter "Pet.") at 9). But Dr. Lekhtman recognized that EMG removal is dependent on electrode size, spacing, width, material, and geometry (Fed. Cir. JA233 at ¶41, JA239 at ¶69, JA201, JA238-39 at ¶68(c)), as well as the circuitry. The first product shown, the patented product, works as claimed. The E-factor book shown by Petitioner had different circuitry so the fact that it has four electrodes did not place it within the claim scope (Fed. Cir. JA228-229 at ¶19-21, Fed. Cir. JA305-337). The third product, Dr. Galiana's tested device, was shown to work as claimed with the basic oscilloscope testing; but, the fourth product, was shown not to substantially remove EMG signals while exercising with the same type of testing (Fed. Cir. JA305-337). Each configuration is different as the electrode configurations, spacing, length, thickness, width, etc., are different.

Figure from Page 9 of Petitioner's Brief with Annotations

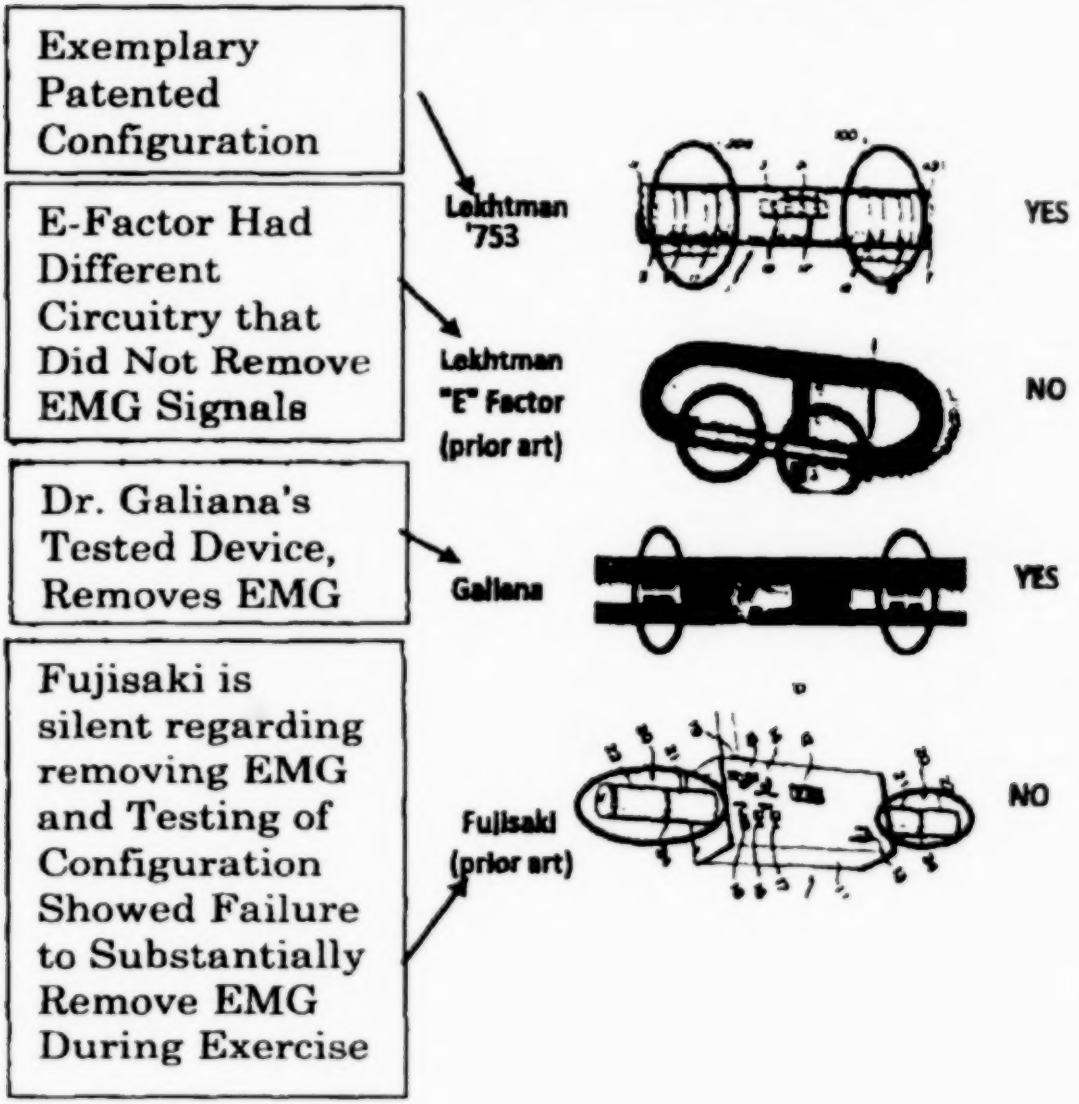

Thus, during reexamination by the USPTO, Respondent submitted evidence that one skilled in the art could determine through routine testing the "spaced relationship" of the electrodes that resulted in the substantial removal of EMG signals. *Biosig Instruments, Inc.*, 715 F.3d at 900. This evidence included statements by the inventor that the design variables to substantially remove the EMG signals

involved the spacing, size, shape, and materials of the electrodes. *Id.* at 900. Using basic electronic equipment—an oscilloscope—Respondent showed that one of ordinary skill in the art would be able to measure whether the electrodes were in such a "spaced relationship" that would provide the requisite substantially-eliminated EMG signals when the device was in use. *Id.* at 900. The USPTO agreed and confirmed Respondent's '753 Patent claims to be patentable without amendment. Importantly, Petitioner has never stated that it cannot reproduce the basic oscilloscope/meter tests to determine what is inside or outside the claim scope.

C. THE CLAIMS HAVE NOT UNDERGONE "METAMORPHOSES"

In order to manufacture an indefiniteness issue where none really exists, Petitioner incorrectly asserts that the '753 Patent claims "have undergone multiple metamorphoses" (Pet. at 9). Petitioner is incorrect. Throughout the '753 Patent itself, the original prosecution, the reexamination proceedings, the district court proceedings, and the appeal, Respondent has consistently maintained that Respondent's claimed invention includes, *inter alia*, a live and a common (*e.g.*, ground) electrode for each hand that are in a "spaced relationship" and connected to a differential amplifier, such that the electrodes can detect hand EMG signals and the heart's ECG signals, and the differential amplifier can substantially remove the hand EMG signals, leaving ECG signals to be processed for accurate heart rate determination (Fed. Cir. JA14 at 5:17-6:15, JA12 at 1:34-41).

Patent: Petitioner incorrectly asserts that the '753 Patent does not define "spaced relationship" and provides "no guidance" on the claimed spaced relationship. The '753 Patent describes that the electrodes are arranged or spaced such that in use the EMG signals received by a live and common electrode pair "will be of substantially equal magnitude and phase" to those received by the other live and common pair (Fed. Cir. JA13 at 3:39-43). The '753 Patent also explains that the electrodes are arranged or spaced such that the ECG signals received by the one live and common electrode pair are of opposite phase to those received by the other live and common electrode pair (Fed. Cir. JA13 at 3:44-50). As the '753 Patent explains, this arrangement or spacing permits the detection of signals such that when inputted into the differential amplifier (Fed. Cir. JA13 at 3:47-50), the heart ECG "signals will be added" and the unwanted "EMG" signals "will be cancelled" (Fed. Cir. JA13 at 42-43). The original patent claims expressly stated this relationship in the claims themselves (Fed. Cir. JA5 at 5:42-6:7). Although Petitioner contends that there is "no test" in the '753 Patent itself, patents are not required to recite elementary electrical testing such as using an oscilloscope to examine electrical signals. Tellingly, Petitioner has never once provided any evidence that a person of ordinary skill in the art would not understand that an oscilloscope/meter can be applied to determine the electrical signals at various points in an electrical circuit.

Original Prosecution: Petitioner ignores that in the original prosecution, the patentee explained, consistent with the specification, that its invention included having electrodes spaced to detect EMG

signals for removal by a differential amplifier and amplifying the ECG signals (Fed. Cir. JA83, Fed. Cir. JA85).

Reexaminations: The reexamination proceedings are consistent with the Patent and the original prosecution. Petitioner improperly selects one quote from Dr. Lekhtman's reexamination declaration while ignoring the main arguments and reasons for why the USPTO agreed that the claims were patentable over Fujisaki et al. Petitioner ignores that Respondent explained the claims were patentable over Fujisaki et al. because (i) Fujisaki et al. was completely silent regarding EMG signals; (ii) one of ordinary skill in the art would not understand Fujisaki et al.'s large-cylindrical electrodes with small spacing to have the capability of removing EMG signals; and (iii) testing showed that Fujisaki et al.'s electrode configuration did not substantially remove EMG signals (Fed. Cir. JA185-86, Fed. Cir. JA305-337). As Respondent pointed out, Fujisaki et al. "does not even mention EMG," much less detecting and removing EMG signals as claimed, and therefore, Respondent's claims were not anticipated or obvious in view of Fujisaki et al. (Fed. Cir. JA197). In fact, Respondent tested various electrode configurations. These tests showed using standard electrical testing with an oscilloscope or meter which of the electrode configurations satisfied the claims and which did not (Fed. Cir. JA202-214, Fed. Cir. JA255 ¶133, Fed. Cir. JA305-337). Petitioner has never disputed that these tests can be applied to determine what is inside or outside of the claims. Ultimately, the Patent Office agreed that Fujisaki et al. lacked the capability to substantially remove EMG signals as claimed, and in June 2010

issued a notice of intent to issue a reexamination certificate (Fed. Cir. JA140-144). In the reasons for allowance, the Examiner stated that the "crucial claim language" was that the prior art did not disclose electrodes configured with a differential amplifier for detecting and substantially removing EMG signals (Fed. Cir. JA142).

District Court Proceedings: Consistent with the Patent, the original prosecution history, and the reexamination proceedings, Respondent asserted the same claim scope during claim construction. Petitioner, however, misrepresents the claim construction proceedings. During claim construction, Petitioner having lost the reexamination proceedings, sought to read in an electrode spacing/width limitation into the claims to manufacture a noninfringement argument (Fed. Cir. JA1378:23-1379:15, Fed. Cir. JA1382:14-1391:23). The crux of Petitioner's argument was there was a legal disavowal of certain electrode spacing/width structures during the reexamination proceedings (Fed. Cir. JA1378:23-1379:15, Fed. Cir. JA1382:14-1391:23). The District Court properly rejected this argument because there could not possibly have been such a disavowal during the reexamination proceedings because Biosig expressly stated during the prosecution history that some electrode configurations having a spacing that is less than the electrode width do substantially remove EMG signals as claimed, such as Dr. Galiana's device, and some of Petitioner's and Star-Trec's devices (Fed. Cir. JA246 at ¶¶101, 102, Fed. Cir. JA328-31, Fed. Cir. JA248-55, Fed. Cir. JA1049). Further, the Reasons for Allowance explain that the claims were patentable because Fujisaki et al. did not disclose

the detection and removal of EMG signals as claimed (Fed. Cir. JA140-44). Respondent's arguments fell right in line with the '753 Patent, the original prosecution, and the reexamination proceedings. Tellingly, Petitioner did not even raise indefiniteness at the claims construction proceedings.

Petitioner alleges that the District Court found that Respondent's "submissions to the Patent Office were internally inconsistent and 'gibberish' " (Pet. at 12, *citing* Fed. Cir. JA1389). However, Petitioner incorrectly cites the oral argument banter and such back and forth of oral argument does not constitute a factual finding by the Court. Moreover, at oral argument, the District Court requested further submissions (Fed. Cir. JA1391 at 24:21-6) and then after reviewing that further submission (Fed. Cir. JA1315-1321) construed the claim in accordance with Respondent's position. (Fed. Cir. JA1362-1367).

Federal Circuit Decision: The Federal Circuit majority agreed with Respondent's position, which it had consistently advanced, finding the claims not indefinite because a person of skill in the art could apply the oscilloscope/meter testing to determine what was within the claim scope. *Biosig Instruments, Inc.*, 715 F.3d at 903. The Federal Circuit majority expressly held that "it has been shown that skilled artisans can readily ascertain the bounds of the 'spaced relationship' through tests using standard equipment." *Id.* The Federal Circuit further held that "with this test, configurations could have been determined by analyzing the differential amplifier input and output signals for detecting EMG and ECG signals and observing the substantial removal of EMG signals from ECG signals while

simulating exercise. These parameters constitute the metes and bounds of 'spaced relationship.'" *Id* at 901.

Federal Circuit Concurring Opinion: The Federal Circuit's concurring opinion expressed the same decision in slightly different terms. As the concurrence explains, the "court's construction provided sufficient clarity to one of skill in the art as to the metes and bounds of the 'spaced relationship' limitation." *Id* at 905. The concurring opinion did not link the functional language in the claim to the "spaced relationship" term because it believed that issue was not before the Federal Circuit. *Id* at 906. Further, Petitioner incorrectly suggests that the Federal Court found that the functional language regarding detecting and removing EMG signals was not a claim limitation, and that the claim would have a different scope under its analysis.

In summary, contrary to Petitioner's argument, Respondent has been unwavering for over twenty years regarding the meaning of its claims and has not urged different constructions. Rather, the District Court was simply led astray by Petitioner's unfounded attorney assertion that a person of skill in the art did not understand the claim scope.

REASONS FOR DENYING THE PETITION

Petitioner's arguments for granting the Petition should be denied because this Court has recently considered the same issues and denied the petition in that instance after soliciting the views of the USPTO. Further, there is no conflict between this Court and the Federal Circuit on the indefiniteness issue warranting granting the Petition. Moreover, Petitioner urges that this Court overturn well-

established law in favor of a "multiple reasonable interpretation" standard that has no legal basis and which would significantly harm the patent system.

I. PETITIONER FAILS TO PROVIDE A BASIS FOR GRANTING ITS PETITION

A. PETITIONER'S ARGUMENTS FAIL BECAUSE THIS COURT RECENTLY DENIED A PETITION FOR CERTIORARI AFTER FULLY CONSIDERING THE VERY SAME ARGUMENTS

Petitioner is merely rehashing the arguments made in *Applera Corp. v. Enzo Biochem, Inc.* 131 S. Ct. 3020 (2011). In *Applera*, this Court issued an order soliciting the views of the USPTO on the very issues that Petitioner raises here. *Applera Corp. v. Enzo Biochem, Inc.*, 131 S. Ct. 847 (2010). After the USPTO submitted an *amicus curiae* brief opining that "this Court's review is not warranted" (Brief for the United States as Amicus Curiae, *Applera*, No. 10-426 (May 17, 2011) (hereinafter "*Applera* U.S. Amicus Brief") at 6), this Court denied the petition for certiorari in *Applera*. 113 S. Ct. 3020. Petitioner identifies nothing that has changed since *Applera*. Thus, this Court has fully considered Petitioner's arguments and has concluded this Court's review is not warranted.

B. PETITIONER FAILS TO SHOW THAT THE FEDERAL CIRCUIT'S VIEW IS INCOMPATIBLE WITH THIS COURT'S INTERPRETATION

As it cannot, Petitioner provides no basis for why the indefiniteness standard applied by the Federal Circuit conflicts with this Court's precedent. Rather, on pages 15-16 of its Petition, Petitioner merely cites general language requiring claims to be definite and then asserts, without citation, that the proper indefiniteness standard is that if a claim "is open to multiple reasonable interpretations[,]" the claim is indefinite (Pet. at 15). As indicated by the lack of citation, Petitioner's "multiple reasonable interpretations" standard is not found in this Court's precedent. Thus, Petitioner's argument fails because it attempts to manufacture a conflict between this Court and the Federal Circuit by attributing a standard to this Court that it cannot even show this Court has adopted. Moreover, Petitioner's argument has no merit because this Court fully considered this very same argument in denying Applera Corp.'s petition for certiorari in view of the USPTO's amicus brief in that case explaining that this Court's and the Federal Circuit's standards are the same. Reply Brief of Petitioner Applera Corp., *Applera* No. 10-426 (November 22, 2011) at 2-4; *Applera* U.S. Amicus Brief at 6, 11-16; Initial Brief of Respondent Enzo Biochem, Inc., *Applera*, No. 10-426 (November 11, 2010) at 6-8.

Petitioner's argument further fails because Petitioner ignores that the Federal Circuit's standards actually comport, rather than conflict, with this Court's indefiniteness standards. Petitioner incorrectly asserts that the Federal

Circuit has applied an "any reasonable meaning" or "insolubly ambiguous" indefiniteness standard that is inconsistent with this Court's precedent (Pet. at 17). There is no conflict. For example, in *Minerals Separation, Ltd. v. Hyde*, this Court explained that "the certainty which the law requires in patents *is not greater than is reasonable*, having regard to their subject matter." 242 U.S. 261, 270 (1916) (emphasis added). This Court has held patent claims definite because they were "sufficiently definite to guide those skilled in the art to" their "successful application." *Id.* at 271. Likewise, in *Eibel Process Co. v. Minnesota & Ontario Paper Co.* this Court held that claims need not be subject to no interpretation as Petitioner suggests. 261 U.S. 45 at 65-67 (1923). Rather, this Court held that claims were not indefinite because the "evidence discloses that one, so skilled" in the art "had no difficulty" in determining the bounds of the claim and terms of degree such as "substantial." *Id.* at 65-66.

The indefiniteness standard applied by the Federal Circuit is no different, as exemplified in this case. As the Federal Circuit explained in this case, a claim is "insolubly ambiguous" or "not amenable to construction" if "reasonable efforts at claim construction result in a definition that does not provide sufficient particularity and clarity to inform skilled artisans of the bounds of the claim." *Biosig Instruments, Inc.*, 715 F.3d 891, 898. The Federal Circuit further explained that indefiniteness "require[s] a showing that a person of ordinary skill would find" the claim term "insolubly ambiguous—that it fails to provide sufficient clarity delineating the bounds of the claim to one skilled in the art." *Id.* at 899. Tellingly, Petitioner fails to provide any

explanation of how the Federal Circuit and this Court supposedly have different standards. Rather, Petitioner plucks language from opinions and merely alleges that the standards differ.

Moreover, Petitioner's argument flies straight in the face of this Court's recognition that construction of a patent claim is a basic issue in any patent case. This Court has also recognized that even a "simple patent case" involves the "element" of "construing the patent." *Markman*, 517 U.S at 384. This Court has explained that "the nature of language makes it impossible to capture the essence of a thing in a patent application." *Festo Corp. v. Shoketsu Kinzoku Kogyo Kabushiki Co.*, 535 U.S. 722, 731 (2002). Accordingly, the Court held that the construction of a patent claim is a question of law for the court and there are defined procedures for a Court to construe a claim. *Markman*, 517 U.S 370. Petitioner's proposed "multiple reasonable interpretation" standard cannot be reconciled with this Court's precedent because there would essentially be no need for a claim construction under Petitioner's standard since a defendant could always assert a "reasonable interpretation" argument. Further, this Court has explained that a patent's "value would be greatly diminished," if it was limited to precise literal terms. *Festo Corp.*, 535 U.S. at 731.

C. THE FEDERAL CIRCUIT HAS NOT MISINTERPRETED THE PATENT STATUTE

Petitioner asserts that the Federal Circuit has misinterpreted the indefiniteness standard of "particularly pointing out and distinctly claiming" (Pet. at 14). Petitioner is wrong because the Federal

Circuit's explanation of the indefiniteness standard has to be understood in the context of construing a claim. A patent is a legal document with claims that define legal rights. *Markman*, 517 U.S. at 388. As explained above, this Court has recognized that claim construction is part of even a simple patent case because it is not an easy task to reduce an invention to words. *Id* at 384. In the adversarial context of patent litigation, it is therefore necessary to construe the claim to define the legal right.

In this context of construing a claim, the Federal Circuit has properly explained that the indefiniteness provision of 35 U.S.C. § 112, ¶2 requires the "scope of the claims be sufficiently definite to inform the public of the bounds of the protected invention, *i.e.*, what subject matter is covered by the exclusive rights of the invention." *Biosig Instruments, Inc.*, 715 F.3d at 897-898. (quoting *Halliburton Energy Servs., Inc. v. M-I LLC*, 514 F.3d 1244, 1249 (Fed. Cir. 2008)). The Federal Circuit further explained that a claim is indefinite "if reasonable efforts at claim construction result in a definition that does not provide sufficient particularity and clarity to inform skilled artisans of the bounds of the claim," which the Federal Circuit terms "insolubly ambiguous." *Id.* at 898. (quoting *Star Sci., Inc. v. R.J. Reynolds Tobacco Co.*, 537 F3.d 1357, 1371 (Fed. Cir. 2008)). The Federal Circuit also explained that because "some experimentation may be necessary to determine the scope of the claims does not render the claims indefinite." *Id.* at 902. (quoting *Exxon Research & Eng'g Co. v. United States*, 265 F.3d. 1371, 1379 (Fed. Cir. 2001)). Thus, the Federal Circuit's standard properly reflects that a claim is not indefinite merely because a defendant

can advocate a reasonable argument. Notably, the USPTO expressly rejected Petitioner's argument in *Applera*. *See Applera* U.S. Amicus Brief at 11-16. Similarly, in other legal contexts, a statute or a contract must be construed, but they are not considered indefinite merely because a motivated defendant can assert a reasonable conflicting argument.

Petitioner asserts that if testing is required to understand how to apply a claim then "it is not too much to ask that the inventor describe those tests" (Pet. at 15). But here the inventor did just that as the oscilloscope/meter testing is described in the intrinsic record, and Petitioner has *never* asserted that it does not understand the tests or cannot apply the tests, much less provided any evidence that persons of skill in the art would have any trouble in reproducing the tests. In contrast, Respondent has submitted substantial evidence that the claims are definite.

D. THE FEDERAL CIRCUIT HAS NOT IMPROPERLY ALLOWED VAGUE CLAIMS TO BE CURED THROUGH CLAIM CONSTRUCTION

Petitioner incorrectly asserts that the Federal Circuit has improperly "cured" vague claims by construing them and that claims must be defined before litigation. Basically, Petitioner is rehashing its other arguments that merely if a defendant advances a "reasonable" claim construction argument that conflicts with the patentee's argument, the claim is indefinite and the Federal Circuit has "cured" the claim by construing it. Thus,

Petitioner's argument fails for the same reasons as its other arguments.

In its argument, Petitioner incorrectly criticizes the Federal Circuit for construing a claim based on the understanding of a person of ordinary skill in the art, as opposed to a lay person. This argument is without merit. A patent is directed to a person of "ordinary skill in the art." 35 U.S.C. § 112, ¶1. Thus, to construe a patent claim from a lay person's perspective, as Petitioner advocates, is contrary to the patent statute.

E. PETITIONER'S DATED CASE FROM THE SECOND CIRCUIT PROVIDES NO BASIS FOR GRANTING ITS PETITION

Petitioner incorrectly asserts that a 1971 case, *Norton Co. v. Bendix*, from the Second Circuit justifies its petition (Pet. at 20-21). Petitioner's argument has no merit because *Norton* is in accordance with both this Court and the Federal Circuit's indefiniteness standard. In *Norton*, the inventors and multiple expert witnesses on plaintiff's behalf all testified that they did not have a standard for defining what "closely spaced" and "substantial distance" meant, and expressed conflicting views regarding how to define whether an accused device met the limitations. *Norton Co. v. Bendix Corp.*, 449 F.2d 553, 555-557 (2d Cir. 1971). Further, there was no standard in the intrinsic record for determining what was inside or outside of the claims, and the Court had to consider conflicting expert testimony. *Id.* at 555. Thus, there is nothing unique about *Norton* that merits this Court's attention.

Petitioner mistakenly tries to draw a parallel between *Norton* and this case because although the technologies differ, the claim terms have some similar words. However, this case is not akin to *Norton* because here the intrinsic record provides routine oscilloscope analysis for determining whether the claims are satisfied and the only testimony from persons of skill in the art is that the claims are definite (Fed. Cir. JA210, Fed. Cir. JA1050 at ¶¶54-55, Fed. Cir. JA248 at ¶110, Fed. Cir. JA253 at ¶127, ¶129). Petitioner has never contended to any Court that it does not understand the oscilloscope test or that it cannot apply the test, much less provide any evidence from a person of ordinary skill in the art.

II. THE FEDERAL CIRCUIT DID NOT COMMIT LEGAL ERROR BY GIVING RESPECT TO THE PRESUMPTION OF VALIDITY IN CRAFTING ITS INDEFINITENESS TEST

Petitioner's argument that the Federal Circuit incorrectly considers the presumption of validity set forth in 35 U.S.C. § 282 in assessing indefiniteness is meritless (Pet. at 18-19). Under 35 U.S.C. § 282 a patent is presumed by law to be valid. Indefiniteness is an invalidity defense set forth in 35 U.S.C. §112, ¶1. Accordingly, patent claims are presumed definite, and the Federal Circuit has properly followed Congress' statutory framework. Moreover, this Court recently upheld the traditional view that the presumption of validity applies to invalidity defenses. *Microsoft Corp. v. i4i Ltd. Partnership*, 131 S. Ct. 2238 (2011).

In arguing that the statutory presumption of validity does not apply to the invalidity defense of indefiniteness, Petitioner misapplies this Court's holding in *Microsoft Corp.* In *Microsoft*, this Court held that the statutory presumption of invalidity applies to validity defenses. 131 S. Ct. at 2252. As the USPTO explained, in its amicus brief in *Applera*, because there is a statutory presumption of validity, the Federal Circuit properly requires "challengers to overcome the presumption by offering a demonstration of indefiniteness, including a showing that reasonable efforts at claim construction are unavailing." *Applera* U.S. Amicus Brief at 18, citing *Exxon*, 265 F.3d at 1375.

Petitioner's citations to the concurrence opinion in *Microsoft* have no merit. The concurrence merely pointed out that the presumption of validity applies to underlying factual issues. *See Microsoft*, 131 S. Ct. at 2253. This Court has recognized that claim construction includes underlying factual issues. *See Markman*, 517 U.S. at 389 (recognizing that claim construction may involve credibility judgments); *Minerals Separation*, 242 U.S. at 270-271 (considering testing of different materials in assessing whether claims were sufficiently definite). In fact, this Court has considered factual evidence in *United Carbon* in resolving an indefiniteness challenge. *United Carbon Co. v. Binney & Smith Co.*, 317 U.S. 228, 233-234 (1942). Thus, from the concurring opinions perspective, the presumption of validity applies to these underlying factual issues that must be considered in answering the indefiniteness issue.

III. THIS CASE IS NOT AN IDEAL VEHICLE FOR CONSIDERING INDEFINITENESS

This case is not an ideal vehicle for considering the indefiniteness standard because the record is lopsided in Respondent's favor, and it is undisputed that the oscilloscope/meter testing is a bright line test for determining what is inside and outside of the claims. Respondent provided evidence from the prosecution history where the inventor, Dr. Lekhtman, and an expert, Dr. Galiana, provided test results showing the standard for determining whether electrodes have the claimed "spaced relationship" such that the EMG signals can be substantially removed by the difference amplifier (Fed. Cir. JA210; Fed. Cir. JA1050 at ¶54, Fed. Cir. JA248 at ¶110; Fed. Cir. JA253 at ¶127, Fed. Cir. JA305-337). Respondent also presented another expert, Dr. Yanulis, who testified that a person of ordinary skill in the art can test for the substantial removal of EMG signals which determines whether electrodes have the spaced relationship required by the claims (Fed. Cir. JA1670). All of these witnesses testified that a person of ordinary skill in the art can perform this test simply by using an oscilloscope and measuring whether the EMG signals are substantially removed. In contrast, Petitioner did not submit any testing, expert or fact declaration, affidavit, testimony or other evidence from a person of skill in the art that suggested the '753 Patent claims were indefinite. Petitioner merely provided attorney assertion that the term "spaced relationship" was indefinite in the abstract. If that is all that is needed to establish indefiniteness, then patents are of limited value. Now, Petitioner

requests that this Court rewrite the indefiniteness standard so that attorney assertion can prevail over factual evidence.

Petitioner's argument that this case is a more ideal case than *Applera* is incorrect. First, Petitioner mischaracterizes the USPTO's amicus brief in *Applera* as suggesting that this Court did not grant the petition in *Applera* primarily because the "insolubly ambiguous" language was not used in the Federal Circuit's opinion in that case (Pet. at 23). But, as explained above, the USPTO disagreed with Petitioner's primary arguments advanced here. *See Applera* U.S. Amicus Brief. Secondly, Petitioner incorrectly suggests that the test is not in the intrinsic record, when in fact it is in the intrinsic record (Fed. Cir. JA12 at 2:12-19, Fed Cir. JA13 at 3:26-31, Fed. Cir. JA14 at 5:42-61, Fed. Cir. JA139-146, Fed. Cir. JA210, Fed. Cir. JA1050 at ¶¶54-55, Fed. Cir. JA248 at ¶110; Fed. Cir. JA253 at ¶127). Moreover, Petitioner incorrectly asserts that there is "not a record in existence within a decade of the patent's issuance," when, in fact, oscilloscope/meter testing is basic electrical testing that can be performed by a college student in an engineering field or possibly even a high school student. A patent has never been required to detail matters known to those skilled in the art such as using a standard oscilloscope to measure electrical signals. Finally, Petitioner misstates the reexamination record. Petitioner completely ignores the testing record and the Reasons for Allowance during prosecution, and instead selectively mischaracterizes one statement in the prosecution record where Dr. Lekhtman is describing the Fujisaki et al. electrode

configuration (Pet. at 25). Petitioner cannot justify this Court granting its Petition by basically ignoring the record and the bright-line test for determining what is inside and outside of the claims.

IV. THERE IS NO ERROR REGARDING INDEFINITENESS THAT HAS DAMAGED OUR PATENT SYSTEM

Petitioner and amicus contend that the indefiniteness standard has weakened our patent system. However, their briefs are contradictory. For example, *amicus* Electronic Frontier Foundation argues on the one hand that the indefiniteness standard has "caused widespread, well known harm" (Brief of Public Knowledge and the Electronic Frontier Foundation as Amici Curiae for the Petitioner, *Nautilus, Inc. v. Biosig Instruments, Inc.*, No. 13-369 (2013) (hereinafter "EFF Brief") at 9), but on the other hand that indefiniteness arises in a "minuscule pool of cases" (EFF Brief at 12). If such harm was being created from the indefiniteness standard, as Petitioner and Amici contend, then surely motivated litigants in heavily litigated patent cases would be advancing these issues, not just raising them in a "minuscule" amount of cases.

What Petitioner and amicus really advocate for is not strengthening the patent system, but rather gutting the patent system. Under their "multiple reasonable interpretations" standard, it would seem that a motivated defendant need only pay an attorney to provide multiple reasonable interpretations to render a claim indefinite. This standard is not realistic and would be harmful to innovation. Because a patent is a legal document

setting forth an invention into words to define a legal right, construing a patent is inherent to its nature, just as it is with other legal documents, such as a statute or a contract.

CONCLUSION

Petitioner has not shown any compelling reasons for this Court to grant the Petition. Therefore, Respondent respectfully requests that the Petition be denied.

Respectfully submitted,

/s/ Michael J. Bonella
Michael J. Bonella
Counsel of Record
Daniel C. Mulveny
Jenna M. Pellecchia
Tod A. Kupstas
KESSLER TOPAZ MELTZER
& CHECK LLP
280 King of Prussia Road
Radnor, PA 19087
(610) 667-7706

Counsel for Respondent

November 22, 2013

REPLY BRIEF

RECORD AND BRIEFS

No. 13-369

Supreme Court, U.S.
FILED
DEC 10 2013
OFFICE OF THE CLERK

IN THE

Supreme Court of the United States

NAUTILUS, INC.,

Petitioner,

v.

BIOSIG INSTRUMENTS, INC.,

Respondent.

ON PETITION FOR A WRIT OF CERTIORARI TO THE UNITED STATES COURT OF APPEALS FOR THE FEDERAL CIRCUIT

REPLY BRIEF

JAMES E. GERINGER
JEFFREY S. LOVE
JOHN D. VANDENBERG*
PHILIP WARRICK
KLARQUIST SPARKMAN, LLP
One World Trade Center
Suite 1600
121 S.W. Salmon Street
Portland, OR 97204
(503) 595-5300
john.vandenberg@klarquist.com

Attorneys for Petitioner

Counsel of Record

December 10, 2013

250992

COUNSEL PRESS
(800) 274-3321 • (800) 359-6859

Library of Congress
Law Library

TABLE OF CONTENTS

Page

Table Of Cited Authorities ii

Reply Brief 1

I. The Federal Circuit's Approach Does Conflict With This Court's Precedent 2

A. The Presumption Of Validity Should Not Dilute The Definiteness Requirement 5

II. This Case Is An Excellent Vehicle To Address The Federal Circuit's Departure From The Proper Definiteness Standard 8

A. The Patent Does Not Clearly Distinguish What Is Claimed From The Prior Art 8

B. Respondent's Functional Test Does Not Define The Claimed "Spaced Relationship" 9

C. Respondent's Shifting Positions And The Courts' Competing Constructions Highlight The Ambiguity In The Claims 10

III. This Issue Is Of Great Importance 10

TABLE OF CITED AUTHORITIES

Page

Cases

Biosig Instruments, Inc. v. Nautilus, Inc.,
715 F.3d 891 (Fed. Cir. 2013).....9

Datamize, LLC v. Plumtree Software, Inc.,
417 F.3d 1342 (Fed. Cir. 2005).....11

Eibel Process Co. v. Minn. & Ontario Paper Co.,
261 U.S. 45 (1923).....4, 5

Enzo Biochem, Inc. v. Applera Corp.,
605 F.3d 1347 (Fed. Cir. 2010).....1

Exxon Research & Eng'g Co. v. United States,
265 F.3d 1371 (Fed. Cir. 2001).....6

Gen. Elec. Co. v. Wabash Appliance Corp.,
304 U.S. 364 (1938)..... *passim*

Markman v. Westview Instruments, Inc.,
517 U.S. 370 (1996).....6

Microsoft Corp. v. i4i Ltd.,
131 S. Ct. 2238 (2011).....7

Minerals Separation, Ltd. v. Hyde,
242 U.S. 261 (1916).....4, 5

Star Scientific, Inc. v. R.J. Reynolds Tobacco Co.,
537 F.3d 1357 (Fed. Cir. 2008).....12

Cited Authorities

Page

United Carbon Co. v. Binney & Smith Co.,
317 U.S. 228 (1942) 9, 12

Universal Oil Prods. Co. v. Globe Oil & Ref'g Co.,
322 U.S. 471 (1944) 6

Statutes and Other Authorities

Supplementary Examination Guidelines for Determining Compliance With 35 U.S.C. 112 and for Treatment of Related Issues in Patent Applications, 76 Fed. Reg. 7162, 7164 (2011) 7

REPLY BRIEF

There are two million unexpired United States patents. Thousands more issue every week. Most were drafted by a patent bar in which "[b]road, to the point of inherently ambiguous, claim drafting is not just a matter of poor drafting skills . . . [but] is a prized talent . . . ." *Enzo Biochem, Inc. v. Applera Corp.*, 605 F.3d 1347, 1348 n.2 (Fed. Cir. 2010) (Plager, J., dissenting from denial of reh'g).

The primary culprit is the Federal Circuit's lax approach to definiteness in patent claims, which this petition seeks to overturn. It is contrary to the statute and this Court's precedent in three ways.

First, the Federal Circuit does not require a patent claim to be particular and distinct. A claim open to multiple reasonable interpretations, as permitted by the Federal Circuit, is ambiguous. It is not particular and distinct. A claim read three different ways by four judges, as in this action, is not particular and distinct. A claim requiring a "formidable" effort to understand, as permitted by the Federal Circuit, is not particular and distinct. A claim that recites a desired function or result without specifying *how* to achieve that result, is not particular and distinct. The Federal Circuit simply is not enforcing the statute's particular and distinct claiming requirement.

Second, the Federal Circuit's proposed cure for an indistinct patent claim—namely, a claim construction from the Federal Circuit—is too late. Good fences make good neighbors, but not if the fence is built years after the shooting

starts. Respondent overstates Petitioner's position on this point. Of course, there is a need for claim construction. There is a need for claim construction because claims are drafted to be understood by persons of skill in the art and jurors are not skilled in the art. Courts construe claims so they can be understood by a jury. But, this need for claim construction does not dilute the statutory mandate that each claim have a single, clear, distinct meaning to those of skill in the art from the day the patent issues. Without that, the patent fails its notice function. Patent claims will not be drafted with a particular and distinct meaning unless this Court reaffirms that they must by statute.

Third, whether a claim is particular and distinct is a matter of law, for a judge, just as is claim construction. It is not fact finding governed by the "clear and convincing" evidence standard. The Federal Circuit's reliance on the statutory presumption of validity to justify its acceptance of ambiguities in patent claims is, therefore, misplaced.

The Court should grant the petition.

I. THE FEDERAL CIRCUIT'S APPROACH DOES CONFLICT WITH THIS COURT'S PRECEDENT

Respondent wrongly contends that there is no conflict between the Federal Circuit's "insolubly ambiguous" standard and this Court's precedent.

In *General Electric Co. v. Wabash Appliance Corp.*, 304 U.S. 364 (1938), the Court explained that "[t]he limits of a patent must be known for the protection of the patentee, the encouragement of the inventive genius of

others, and the assurance that the subject of the patent will be dedicated ultimately to the public." *Id.* at 369. That demands more than the Federal Circuit's standard, which allows the limits of a patent to be unknown to the public, even skilled artisans, until construed by the courts.

The issue in *General Electric* was similar to the issue presented here. In *General Electric*, the asserted claims related to filaments for electric incandescent lamps. *Id.* at 368. The patentee sought to remedy "sagging" and "offsetting" that plagued prior-art lamps, reducing their efficiency and shortening their lifespan. *See id.* at 356. Similarly, Mr. Lekhtman purportedly sought to improve existing heart rate monitors by remedying problems of EMG interference.

The Court noted that the claimed filament structure existed in the prior art. *Id.* at 369-70. Similarly, the relevant Lekhtman circuitry existed in the prior art devices (such as Fujisaki). The Court also noted that "the specification of the [asserted] patent does not attempt in any way to describe the filament, except by mention of its coarse-grained quality." *Id.* at 373. Similarly, the Lekhtman patent contains no meaningful description of the electrodes' spaced relationship.

The Court found the functional language in the patent claim inadequate to define the structural characteristics of the filament's grains. *Id.* at 370 (referring to the functional clause, "to prevent substantial sagging and offsetting during a commercially useful life for the lamp"). "Apart from the statement with respect to their function, nothing said about their size distinguishes the

earliest filaments . . . ." *Id.* Similarly, here, nothing said in the patent about the electrodes' "spaced relationship" distinguishes the prior art. The Lekhtman claims fail to recite (or exclude) any particular spacing. Moreover, they fail even to link electrode spacing to the desired functional result.

The Court ultimately held that "a characteristic essential to novelty may not be distinguished from the old art solely by its tendency to remedy the problems in the art met by the patent." *Id.* at 371-72 (characterizing this as the vice of functional claiming). In contrast, the Federal Circuit's opinion in this case essentially holds the opposite. This Court should reaffirm this important principle and reject Respondent's attempt to define a structural limitation in purely result-oriented terms.

The earlier Supreme Court authorities cited by Respondent do not counsel otherwise. For example, the patent in *Minerals Separation, Ltd. v. Hyde*, 242 U.S. 261 (1916), related to a method for extracting minerals by agitating crushed ore with a "considerably reduced" amount of oil compared to the prior art. *See* U.S. Pat. No. 835,120, at 1:9-35 (suggesting "a fraction of one per cent" oil compared to prior-art mixtures of four to six percent). The Court upheld only the claims reciting specific limits on the amount of oil used (*e.g.*, "a small proportion . . . amounting to a fraction of one per cent") and *invalidated* claims reciting less precise amounts (*e.g.*, "a small quantity"). *See Hyde*, 242 U.S. at 271. And in *Eibel Process Co. v. Minn. & Ontario Paper Co.*, 261 U.S. 45 (1923), the Court upheld claims reciting "high" and "substantial" elevations where only "small or trivial" elevations were found in the prior art. *Id.* at 58. Thus, the claims held sufficiently definite in those

cases recited non-functional limitations distinguishing the claimed inventions from the prior art. Conversely, the Lekhtman patent recites only a "spaced relationship" without any specific structural limitations to distinguish the prior art.

Furthermore, much of the specific language relied upon by Respondent relates to the adequacy of the patent disclosure under what is now 35 U.S.C. § 112(a) (providing that patents must "enable any person skilled in the art . . . to make and use the [invention]"), and not the particular and distinct claiming requirement of Section 112(b). *See Hyde*, 242 U.S. at 271 (holding that "[the patent] is clearly sufficiently definite to guide those skilled in the art to its successful application"); *Eibel Process*, 261 U.S. at 66 ("[O]ne versed in paper making could find in Eibel's specifications all he needed to know, to avail himself of the invention."). The question of whether a skilled artisan could practice the claimed invention is not dispositive of definiteness. For example, in *General Electric*, this Court held that even "assum[ing] that [the inventor] has sufficiently informed those skilled in the art how to make and use his filament," the inventor nonetheless failed to comply with the definiteness requirement. 304 U.S. at 368-69.

A. THE PRESUMPTION OF VALIDITY SHOULD NOT DILUTE THE DEFINITENESS REQUIREMENT

A misplaced reliance on the presumption of validity has led the Federal Circuit to expressly dilute the statutory requirement of particular and distinct patent claiming: "We accord respect to the statutory

presumption of patent validity, and we protect the inventive contribution of patentees, even when the drafting of their patents has been less than ideal." Pet. App. 22a (quoting *Exxon Research & Eng'g Co. v. United States*, 265 F.3d 1371, 1375 (Fed. Cir. 2001)).

The Federal Circuit shields vague and imprecise claim language with its permissive "insolubly ambiguous" standard, and in so doing, has re-assigned the burden imposed by poor claim drafting to the public. It has turned the definiteness requirement on its head by protecting patent owners at the expense of competitors and the public. *See, e.g., Universal Oil Prods. Co. v. Globe Oil & Ref'g Co.*, 322 U.S. 471, 484-85 (1944) ("The claim is required to be specific for the very purpose of protecting the public against extension of the scope of the patent."); *Gen. Elec.*, 304 U.S. at 369 ("The statute seeks to guard against unreasonable advantages to the patentee and disadvantages to others arising from uncertainty as to their rights . . . .").

Respondent mistakenly argues that indefiniteness in this case turns on factual findings. Respondent analogizes to claim construction and relies upon this Court's purported recognition of underlying factual issues. Resp't Br. 31. Yet the very opinion cited by Respondent held that claim construction should be treated "as purely legal." *Markman v. Westview Instruments, Inc.*, 517 U.S. 370, 391 (1996). There are no factual determinations in claim construction, and in any event there is no dispute that Respondent has taken the positions illustrated at page 9 of the Petition as to what spacings fall inside or outside of the claimed "spaced relationship."

Respondent does not even attempt to address the view, as expressed by some Members of this Court, that "[m]any claims of invalidity rest . . . upon how the law applies to facts as given. . . . Do they show that the patent applicant described his claims properly? § 112. Where the ultimate question of patent validity turns on the correct answer to legal questions . . . today's strict standard of proof has no application." *Microsoft Corp. v. i4i Ltd.*, 131 S. Ct. 2238, 2253 (2011) (Breyer, J., concurring).

This Court should take this opportunity to clarify the import of the statutory presumption to legal issues. *See id.* ("By preventing the 'clear and convincing' standard from roaming outside its fact-related reservation, courts can increase the likelihood that discoveries or inventions will not receive legal protection where none is due."). And by rejecting the Federal Circuit's misplaced reliance on the statutory presumption of validity, this Court may establish a consistent definiteness standard for pending and issued patents. *See Supplementary Examination Guidelines for Determining Compliance With 35 U.S.C. 112 and for Treatment of Related Issues in Patent Applications*, 76 Fed. Reg. 7162, 7164 (2011) ("[I]f the language of a claim . . . is such that a person of ordinary skill in the relevant art would read it with more than one reasonable interpretation, then a rejection under § 112, ¶ 2 is appropriate.").

II. THIS CASE IS AN EXCELLENT VEHICLE TO ADDRESS THE FEDERAL CIRCUIT'S DEPARTURE FROM THE PROPER DEFINITENESS STANDARD

A. THE PATENT DOES NOT CLEARLY DISTINGUISH WHAT IS CLAIMED FROM THE PRIOR ART

Respondent insists that the spaced relationships shown in close prior-art references (the Fujisaki patent and Lekhtman's own prior device, both shown at page 9 of the Petition) are not the claimed "spaced relationship." Respondent relies on claim language requiring the circuitry "to produce a substantially zero electromyogram signal at the output of said differential amplifier." Nothing in the patent, however, ties this functional result to the spacing limitation.

Respondent emphasizes Mr. Lekhtman's alleged "recogni[tion] that EMG removal is dependent on electrode size, spacing, width, material, and geometry." Resp't Br. 13. But the patent claims do not reflect that. Of those features, only a "spaced relationship" is claimed. Respondent's argument that the size, shape, and materials of a given electrode pair all affect the definition of a "spaced relationship" is needlessly obscure, and is nowhere to be found in the patent itself, coming into the record only in the named inventor's after-the-fact declaration during reexamination, more than a decade after the patent had issued.

Respondent's arguments beg the critical question of whether claims must be distinct from the day the patent

issues. Nautilus submits that there must be a clear meaning to the claim language "spaced relationship," and that meaning must be apparent from the start to persons of skill in the art. Respondent, and the Federal Circuit, would allow the meaning to be made clear long after the patent issued. That is the wrong standard.

B. RESPONDENT'S FUNCTIONAL TEST DOES NOT DEFINE THE CLAIMED "SPACED RELATIONSHIP"

Respondent relies on "oscilloscope testing" to resolve the ambiguity in the patent over when the claims read on a given "spaced relationship." Respondent's reliance is misplaced. Testing related to a functional limitation recited later in the claim—like the functional claim language addressed in *General Electric*—does not define the structural limitation at issue, much less "clearly distinguish what is claimed from what went before in the art and clearly circumscribe what is foreclosed from future enterprise." *United Carbon Co. v. Binney & Smith Co.*, 317 U.S. 228, 236 (1942).

And contrary to Respondent's contentions, Nautilus has identified multiple ambiguities in the testing cited by Respondent. *See, e.g.*, Brief of Defendant-Appellee, 48-51, *Biosig Instruments, Inc. v. Nautilus, Inc.*, 715 F.3d 891 (Fed. Cir. 2013) (No. 26). For example, one of Respondent's experts (Dr. Galiana, giving her opinion prior to reexamination) tested for a detectable heart wave using a filtered signal. *See* JA1052. Mr. Lekhtman tested for a signal ratio, at a different place in the circuit, and eschewed using a filter. *See* JA245; JA231. He simply ran a new test. Moreover, Mr. Lekhtman admitted that,

for at least one prior-art device, satisfactory removal of EMG signals depends on *how the electrodes are grasped*, and he distinguished the device on that basis. *See* JA256. In contrast, Respondent's prior expert, Dr. Galiana, made no such distinction, and indeed made no mention of testing using different "grasps."

C. RESPONDENT'S SHIFTING POSITIONS AND THE COURTS' COMPETING CONSTRUCTIONS HIGHLIGHT THE AMBIGUITY IN THE CLAIMS

During the reexamination, Respondent distinguished the spaced relationship of the electrodes shown in prior-art devices as being too close or asymmetric. *See* JA233; JA241.

In the district court, Respondent convinced the judge that these distinctions were not clear disclaimers of claim scope because those distinctions were contradicted by Respondents arguments elsewhere in the file history. Respondent successfully urged the court to adopt a construction of "spaced relationship" that covers *any* spaced relationship, close or far, symmetric or asymmetric. *See* Pet. App. 43a-44a. When Nautilus pointed out that a person of skill in the art could not apply this construction consistently with Respondent's arguments in reexamination distinguishing the spaced relationships of electrodes shown in the prior art, Respondent changed positions again. This time, Respondent attempted to preserve the validity of the claims by referencing functional limitations not found in the court's construction. Respondent argued that the claims were definite based on the testing that Respondent introduced into the record during reexamination.

The district court declined to adopt the functional approach urged by Respondent and found the claims invalid for indefiniteness. The Federal Circuit majority reversed the district court's indefiniteness conclusion based on a functional construction tied to the test results. *See* Pet. App. 20a.

In contrast, Judge Schall would have construed "spaced relationship" as any "fixed spatial relationship" that allows both electrodes to be held simultaneously, but not touch. *Id.* at 31a (declining to "presume[] a functional linkage between the 'spaced relationship' limitation and the removal of EMG signals"). But this construction contradicts Respondent's position in the reexamination that the prior-art devices illustrated at page 9 of the Petition do not show the claimed "spaced relationship" between the electrodes.

These constructions are irreconcilable, as are Respondent's shifting positions. They affect whether the spacing used in a given device falls inside or outside the scope of the claims. They illustrate the mischief caused by a rule that allows a claim to survive even though it conveys multiple, inconsistent meanings to reasonable people. This case is therefore an excellent vehicle for addressing this issue, and for reversing the Federal Circuit's erroneous approach.

III. THIS ISSUE IS OF GREAT IMPORTANCE

The definiteness of claim terms should not turn on "whether those terms can be given *any reasonable meaning*." *Datamize, LLC v. Plumtree Software, Inc.*, 417 F.3d 1342, 1347 (Fed. Cir. 2005) (emphasis

added). Nor should claim construction be used to "inform skilled artisans of the bounds of the claim," Pet. App. 13a (quoting *Star Scientific, Inc. v. R.J. Reynolds Tobacco Co.*, 537 F.3d 1357, 1371 (Fed. Cir. 2008)), rather than articulating in lay terms the understanding of those skilled in the art. The Federal Circuit has shifted the public-notice function from the issued patent claims to a court's claim construction and has thereby burdened the public with the very uncertainty that the statute was designed to prevent.

This tolerance of ambiguous patent claims has had predictable and regrettable consequences as described in the Petition and the *amici* briefs. *See, e.g.*, Brief of *Amici* Amazon.com, Inc., et al., 2-12. It has invited patent drafters to obfuscate their inventions and forced courts to waste judicial resources trying to make sense of unclear and overbroad terms. And the Federal Circuit's tacit approval of patent owners exploiting ambiguous (but not "insolubly ambiguous") claim language at the expense of competitors and the public amounts to an endorsement of the very "zone of uncertainty" prohibited by the Supreme Court. *See United Carbon*, 317 U.S. at 236.

The current Administration and numerous stakeholders have recently and specifically expressed concern regarding vague and overbroad patents, and the Court should avail itself of the opportunity to clarify the statutory mandate. Unlike *Applera*, this case presents a clear example of the Federal Circuit's invocation and application of the "insolubly ambiguous" standard in the context of simple technology and a focused record.

Respectfully submitted,

JAMES E. GERINGER
JEFFREY S. LOVE
JOHN D. VANDENBERG*
PHILIP WARRICK
KLARQUIST SPARKMAN, LLP
One World Trade Center
Suite 1600
121 S.W. Salmon Street
Portland, OR 97204
(503) 595-5300
john.vandenberg@klarquist.com

Attorneys for Petitioner

**Counsel of Record*

December 10, 2013

AMICUS CURIAE BRIEF

RECORD
AND
BRIEFS

No. 13-369

Supreme Court, U.S.
FILED
OCT 23 2013
OFFICE OF THE CLERK

IN THE
Supreme Court of the United States

NAUTILUS, INC.,
Petitioner,
v.
BIOSIG INSTRUMENTS, INC.,
Respondent.

On Petition for a Writ of Certiorari to the United States Court of Appeals for the Federal Circuit

BRIEF OF AMAZON.COM, INC., GOOGLE INC., LIMELIGHT NETWORKS, INC., SAP AMERICA, INC., NEWEGG INC., NETAPP, INC., GARMIN LTD., SAS INSTITUTE INC., MEDIAFIRE, ESRI, AND J.C. PENNEY CORPORATION, INC. AS *AMICI CURIAE* IN SUPPORT OF PETITION FOR A WRIT OF CERTIORARI

JEFFREY H. DEAN
ASSOCIATE GENERAL COUNSEL, LITIGATION & REGULATORY
AMAZON.COM, INC.
440 Terry Avenue North
Seattle, WA 98109-5210
(206) 740-0521

SUZANNE MICHEL
SENIOR PATENT COUNSEL
GOOGLE INC.
1101 New York Avenue, N.W.
Washington, D.C. 20005
(202) 346-1373

JOHN THORNE
Counsel of Record
AARON M. PANNER
CHRISTOPHER C. FUNK
KELLOGG, HUBER, HANSEN, TODD, EVANS & FIGEL, P.L.L.C.
1615 M Street, N.W.
Suite 400
Washington, D.C. 20036
(202) 326-7900
(jthorne@khhte.com)

October 23, 2013

(Additional Counsel Listed On Inside Cover)

Library of Congress
Law Library

DION MESSER
SR. IP CORPORATE COUNSEL
LIMELIGHT NETWORKS, INC.
222 South Mill Avenue
8th Floor
Tempe, AZ 85281
(602) 850-4833

DOUGLAS LUFTMAN
VICE PRESIDENT, INNOVATION SERVICES & CHIEF INTELLECTUAL PROPERTY COUNSEL
NETAPP
495 East Java Drive
Sunnyvale, CA 94089
(408) 822-6521

TIMOTHY K. WILSON
SENIOR IP COUNSEL
SAS INSTITUTE INC.
701 SAS Campus Drive
Cary, NC 27513
(919) 531-3240

ZION MAFFEO
ESRI
380 New York Street
Redlands, CA 92373
(909) 793-2853

SAMIR N. PANDYA
SENIOR IP COUNSEL
SAP – GLOBAL LITIGATION GROUP
3999 West Chester Pike
Newtown Square, PA 19073
(610) 661-9767

ANDREW R. ETKIND
VICE PRESIDENT AND GENERAL COUNSEL
GARMIN INTERNATIONAL, INC.
1200 E. 151st Street
Olathe, KS 66062
(913) 397-8200

DIANE K. LETTELLEIR
SENIOR MANAGING COUNSEL
LITIGATION
J.C. PENNEY CORPORATION, INC.
6501 Legacy Drive, MS 1122
Plano, TX 75024
(972) 431-5012

LEE C. CHENG
CHIEF LEGAL OFFICER
NEWEGG INC.
16839 E. Gale Avenue
City of Industry, CA 91745
(626) 271-9700

QUESTIONS PRESENTED

The patent statute requires patent claims to be "definite"—the application must "particularly point[] out and distinctly claim[] the subject matter which the applicant regards as his invention." 35 U.S.C. § 112, ¶ 2.* The Federal Circuit holds that this requirement is met so long as a court can find that the claim has some discernible meaning and that it is not "insolubly ambiguous," even when the claim is capable of multiple reasonable interpretations. App. 21a-22a.

The questions presented are:

Whether the Federal Circuit's "insolubly ambiguous" standard is consistent with the text and purpose of § 112 as interpreted by this Court; and

Whether the Federal Circuit's "insolubly ambiguous" standard is compelled by the statutory presumption that patents are valid.

---

* Paragraph 2 of 35 U.S.C. § 112 was replaced with the redesignated § 112(b) by the Leahy-Smith America Invents Act, Pub. L. No. 112-29, § 4(c), 125 Stat. 284, 296 (2011). Cites in this brief are to the pre-AIA version of the provision applied below. App. 12a n.8.

TABLE OF CONTENTS

Page

QUESTIONS PRESENTED i

TABLE OF AUTHORITIES iv

INTEREST OF *AMICI CURIAE* 1

INTRODUCTION 1

ARGUMENT 2

I. PATENT INDEFINITENESS IS A GROWING PROBLEM OF NATIONAL ECONOMIC IMPORTANCE 2

II. THE PROBLEM OF INDEFINITE PATENTS CANNOT BE SOLVED BY THE PTO ALONE; THE FEDERAL CIRCUIT'S REFUSAL TO POLICE INDEFINITE PATENTS DISTORTS PATENTEE BEHAVIOR AT THE PTO 8

III. THE PROBLEM OF INDEFINITENESS SHOULD BE ADDRESSED BY ENFORCING THE STATUTE AND THIS COURT'S PRECEDENTS THAT REQUIRE CLAIMS TO BE REASONABLY CLEAR AT THE TIME THE PATENT ISSUES SO THAT THE PUBLIC CAN KNOW WHAT IS AND WHAT IS NOT COVERED 12

A. Clarity Is Required When the Patent Issues 14

B. The Claim Must Be Reasonably Clear on Its Face 17

C. A "Functional" Construction Cannot Resolve Indefiniteness 18

IV. THE PRESUMPTION OF VALIDITY DOES NOT JUSTIFY EXTRAORDINARY EFFORTS TO SALVAGE INDEFINITE CLAIMS 20

CONCLUSION 22

TABLE OF AUTHORITIES

Page

CASES

Datamize, LLC v. Plumtree Software, Inc., 417 F.3d 1342 (Fed. Cir. 2005) 14

eBay Inc. v. MercExchange, L.L.C., 547 U.S. 388 (2006) 18

Enzo Biochem, Inc. v. Applera Corp., 605 F.3d 1347 (Fed. Cir. 2010) 10

Evans v. Eaton, 20 U.S. (7 Wheat.) 356 (1822) 13

Exxon Research & Eng'g Co. v. United States, 265 F.3d 1371 (Fed. Cir. 2001) 6, 14, 20

Fagan v. Shinseki, 573 F.3d 1282 (Fed. Cir. 2009) 9

FCC v. Fox Television Stations, Inc., 132 S. Ct. 2307 (2012) 16

Festo Corp. v. Shoketsu Kinzoku Kogyo Kabushiki Co., 535 U.S. 722 (2002) 13, 21

General Elec. Co. v. Wabash Appliance Corp., 304 U.S. 364 (1938) 19

Halliburton Energy Servs., Inc. v. M-I LLC, 514 F.3d 1244 (Fed. Cir. 2008) 20

Halliburton Oil Well Cementing Co. v. Walker, 329 U.S. 1 (1946) 5, 19, 20

Holland Furniture Co. v. Perkins Glue Co., 277 U.S. 245 (1928) 19

Ibormeith IP, LLC v. Mercedes-Benz USA, LLC, No. 2013-1007 (Fed. Cir. Oct. 22, 2013) 20

KSR Int'l Co. v. Teleflex Inc., 550 U.S. 398 (2007) 18

Markman v. Westview Instruments, Inc., 517 U.S. 370 (1996) 2, 14, 21

Mayo Collaborative Servs. v. Prometheus Labs., Inc., 132 S. Ct. 1289 (2012) 4

Merrill v. Yeomans, 94 U.S. 568 (1877) 2, 6, 8, 13, 14, 21

Microsoft Corp. v. i4i Ltd. P'ship, 131 S. Ct. 2238 (2011) 21

O'Reilly v. Morse, 56 U.S. (15 How.) 62 (1854) 4-5

Oetiker, In re, 977 F.2d 1443 (Fed. Cir. 1992) 9

Radio Corp. of Am. v. Radio Eng'g Labs., Inc., 293 U.S. 1 (1934) 20

United Carbon Co. v. Binney & Smith Co., 317 U.S. 228 (1942) 21

Universal Oil Prods. Co. v. Globe Oil & Ref. Co., 322 U.S. 471 (1944) 16

Warmerdam, In re, 33 F.3d 1354 (Fed. Cir. 1994)..... 6

White v. Dunbar, 119 U.S. 47 (1886).....13, 18

ADMINISTRATIVE DECISIONS

Ex parte Miyazaki, No. 2007-3300, 2008 WL 5105055 (B.P.A.I. Nov. 19, 2008).....10, 18

CONSTITUTION, STATUTES, AND RULES

U.S. Const. art. III 10

Patent Act (35 U.S.C.):

§ 111(a)(2)(A) 12

§ 112 ..... 1, 2, 12, 13, 19, 21

¶ 2 ..... 1, 2, 13, 19

§ 283 18

Sup. Ct. R:

Rule 37.2(a) 1

Rule 37.3(a) 1

Rule 37.6 1

ADMINISTRATIVE MATERIALS

Executive Office of the President, *Patent Assertion and U.S. Innovation* (June 2013), *available at* http://www.whitehouse.gov/sites/default/files/docs/patent_report.pdf 7

Federal Trade Comm'n, *The Evolving IP Marketplace: Aligning Patent Notice and Remedies with Competition* (Mar. 2011), *available at* http://www.ftc.gov/os/2011/03/110307patentreport.pdf 2, 3, 5, 6

Gov't Accountability Office, *Intellectual Property: Assessing Factors That Affect Patent Infringement Litigation Could Help Improve Patent Quality* (Aug. 2013), *available at* http://www.gao.gov/assets/660/657103.pdf 7, 8

Notice, *Supplementary Examination Guidelines for Determining Compliance With 35 U.S.C. 112 and for Treatment of Related Issues in Patent Applications*, 76 Fed. Reg. 7162 (Feb. 9, 2011) 18

Patent & Trademark Office, Manual of Patent Examining Procedure (8th ed. rev. 9, Aug. 2012) 9, 10

White House, *FACT SHEET: White House Task Force on High-Tech Patent Issues* (June 4, 2013), *available at* http://www.whitehouse.gov/the-press-office/2013/06/04/fact-sheet-white-house-task-force-high-tech-patent-issues 8

OTHER MATERIALS

John R. Allison & Mark A. Lemley, *Empirical Evidence on the Validity of Litigated Patents*, 26 AIPLA Q.J. 185 (1998) 12

James Bessen & Michael J. Meurer, *Patent Failure: How Judges, Bureaucrats, and Lawyers Put Innovators At Risk* (2008) 4, 11

Brief for the U.S. as Amicus Curiae, *Applera Corp. v. Enzo Biochem, Inc.*, No. 10-426 (U.S. filed May 17, 2011) 11

Dan L. Burk & Mark A. Lemley, *The Patent Crisis and How the Courts Can Solve It* (2009) 9

Ronald H. Coase, *The Problem of Social Cost*, 3 J.L. & Econ. 1 (1960) 15

Harold Demsetz, *Toward a Theory of Property Rights*, 57 Am. Econ. Rev. 347 (1967) 16

Roberto Fontana et al., *Reassessing Patent Propensity: Evidence from a Data-Set of R&D Awards, 1977-2004*, Working Papers 2013/09 (2013), *available at* http://pascal.iseg.utl.pt/~depeco/wp/wp092013.pdf 5

Herbert Hovenkamp:

Competition for Innovation, 2012 Colum. Bus. L. Rev. 799 16

Innovation and the Domain of Competition Policy, 60 Ala. L. Rev. 103 (2008) 15

William M. Landes & Richard A. Posner, *The Economic Structure of Intellectual Property Law* (2003) 3, 15

Christa J. Laser, *A Definite Claim on Claim Indefiniteness: An Empirical Study of Definiteness Cases of the Past Decade with a Focus on the Federal Circuit and the Insolubly Ambiguous Standard*, 10 Chi.-Kent J. Intell. Prop. 25 (2010) 12

Stephen M. McJohn, *Patents: Hiding From History*, 24 Santa Clara Computer & High Tech. L.J. 961 (2008) 11

Lee Petherbridge, *On the Development of Patent Law*, 43 Loy. L.A. L. Rev. 893 (2010) 11

Michael Risch, *The Failure of Public Notice in Patent Prosecution*, 21 Harv. J.L. & Tech. 179 (2007) 11

F.M. Scherer, *New Perspectives on Economic Growth and Technological Innovation* (1999) 4

R. Polk Wagner, *Understanding Patent-Quality Mechanisms*, 157 U. Pa. L. Rev. 2135 (2009) 11

INTEREST OF *AMICI CURIAE*[1]

Amici are some of America's leading technology companies. Collectively, they have invested billions of dollars in research and development, employ the world's most innovative computer scientists and engineers, and create hundreds of thousands of other rewarding American jobs. Their contributions in technology and commerce have transformed society in countless ways. They also are repeatedly defendants in costly patent-infringement lawsuits involving vague patents having broad but indefinite scope.

INTRODUCTION

The Court should grant the petition and reverse the decision below because the Federal Circuit's construction of § 112, ¶ 2 of the Patent Act conflicts with the statute and undermines the notice function of patents—distorting incentives for inventors, taxing future innovation, and creating a host of other social costs that are borne daily by the public. The statute requires claims to "particularly point[] out and distinctly claim[] the subject matter which the applicant regards as his invention." 35 U.S.C. § 112, ¶ 2. That the statute requires such precision in the

---

[1] Pursuant to Supreme Court Rule 37.6, counsel for *amici* represent that they authored this brief in its entirety and that none of the parties or their counsel, nor any other person or entity other than *amici* or their counsel, made a monetary contribution intended to fund the preparation or submission of this brief. Pursuant to Rule 37.2(a), counsel for *amici* represent that all parties were provided notice of *amici*'s intention to file this brief at least 10 days before its due date. Pursuant to Rule 37.3(a), counsel for *amici* represent that all parties have consented to the filing of this brief. Petitioner has filed a letter granting blanket consent to the filing of *amicus* briefs; written consent of respondent to the filing of this brief is being submitted contemporaneously with this brief.

patent *application* underscores the importance of requiring precision at the outset: If a patent, as defined by the claims, is not clear and understandable to persons of ordinary skill in the art, it creates unacceptable uncertainty and incalculable social costs.

The Federal Circuit's (mis)interpretation of § 112, ¶ 2 ignores both the text and purpose of the statute by refusing to invalidate a patent for indefiniteness unless the claims are either "not amenable to construction or insolubly ambiguous." App. 13a (internal quotations omitted). That standard—in general and as applied below—undermines the purpose of the indefiniteness inquiry, which is to ensure that what a patent covers and does not cover is clear at the time the patent issues, so that "'[t]he public [is not] deprived of rights supposed to belong to it, without being clearly told what it is that limits these rights.'" *Markman v. Westview Instruments, Inc.*, 517 U.S. 370, 390 (1996) (quoting *Merrill v. Yeomans*, 94 U.S. 568, 573 (1877)).

ARGUMENT

I. PATENT INDEFINITENESS IS A GROWING PROBLEM OF NATIONAL ECONOMIC IMPORTANCE

The "first" problem identified by the Federal Trade Commission's recent study of how patent abuse is harming innovation is the failure of many patents to provide public "notice . . . of what technology is protected." FTC, *The Evolving IP Marketplace: Aligning Patent Notice and Remedies with Competition* 2 (Mar. 2011). Following a three-year study, including multiple hearings involving participants representing diverse interests, the FTC found that clear notice of claim scope "is essential for patents to operate as a property system." *Id.* at 74. "Effective notice fosters

efficient innovation investment by enabling firms to select technologies with knowledge of applicable patent rights. It removes uncertainty, which causes some firms to shy away from procompetitive innovation for fear of the penumbra that surrounds a patent's actual reach, and which induces others to engage unnecessarily in costly design-around efforts." *Id.* at 134. "[W]hen patents provide clear notice of their boundaries . . . parties [are able] to contract efficiently, with confidence as to the technology rights that are conveyed, facilitating both collaboration among firms with complementary expertise and competition among inventions in technology markets." *Id.* at 74. Good fences make good neighbors.

Conversely, "[p]oor patent notice undermines innovation and competition by raising the risk of . . . infringement and imposing 'a very high overhead' on innovation." *Id.* at 76 (citation omitted). "Poor patent notice may cause firms to cut back on procompetitive innovation, reducing competitive vigor and depriving consumers of new technologies. Firms reduce their R&D expenditures in the face of increased uncertainty." *Id.* at 77. Poorly defined patents may force a firm to incur unnecessary costs, further "burdening innovative activities and raising prices" charged to consumers. *Id.* at 78. And, of course, even for firms whose commitment to innovation remains undeterred by ambiguous patents, litigation diverts large sums of otherwise useful capital away from further investment in new production.[2]

---

[2] The academic literature anticipates the FTC's findings. *See* William M. Landes & Richard A. Posner, *The Economic Structure of Intellectual Property Law* 324 (2003) ("[A]n indefinite claim would tend to enlarge the practical scope of the patent beyond its lawful bounds by imposing legal risks on competi-

The problem isn't just that an unwitting infringer will stumble across an unclear boundary and be taxed with the cost of a lawsuit and the risk of a large jury award or an injunction. Ambiguous patents deter investments in new innovations in adjacent areas. James Bessen & Michael J. Meurer, *Patent Failure: How Judges, Bureaucrats, and Lawyers Put Innovators At Risk* 219 (2008) ("Our empirical analysis has shown that poor patent notice has reduced the incentives to invent."). The patent system has long been understood to advance science and the useful arts in two equally important ways. On the one hand, the patent laws protect an inventor's investment in specific technology against free riding. On the other, the patent laws incentivize the public (and protect its right) to solve the same problem in better and more efficient ways. Both engines of innovation are of equal importance to the proper functioning of our patent system. Ambiguous patents unduly reward the first engine of innovation while depriving the public of the important benefits of the second.

For similar reasons, the patent laws do not allow patents on abstract ideas or that claim all ways of achieving a desired result (*i.e.*, "functional" patents): Such patents "inhibit future innovation" and needlessly "foreclose[] more future invention than the underlying discovery could reasonably justify." *Mayo Collaborative Servs. v. Prometheus Labs., Inc.*, 132 S. Ct. 1289, 1301 (2012); *see O'Reilly v. Morse*, 56 U.S.

---

tors, who would be buying an infringement suit if they mistook those bounds because the patent claim was unclear."); F.M. Scherer, *New Perspectives on Economic Growth and Technological Innovation* 87 (1999) (Federal Circuit decisions tolerating indefinite patents "make innovation more dangerous—indeed, much like walking through a mine field").

(15 How.) 62, 112-13 (1854) (rejecting claim to all machines for writing or printing at a distance using "electric or galvanic current" to avoid deterring "some future inventor, in the onward march of science, [who] may discover a mode of writing or printing at a distance by means of the electric or galvanic current, without using [Morse's specific invention]," and whose "invention may be less complicated—less liable to get out of order—less expensive in construction, and in its operation").

The problem of excessive foreclosure is particularly urgent because empirical evidence indicates that many of the most important innovations are *un*patented. A study of the top 100 industrial innovations worldwide each year, from 1977 to 2004, showed that more than 90% were not patented. Roberto Fontana et al., *Reassessing Patent Propensity: Evidence from a Data-Set of R&D Awards, 1977-2004*, Working Papers 2013/09, at 28, tbl. 9 (2013). Yet those who successfully conceive, develop, and invest in such innovations bear much of the social costs of indefinite patents.

The Federal Circuit's rule is responsible for much of these substantial social costs. The FTC found that, especially in the field of information technology, patents often fail to set forth well-defined boundaries and may describe only a problem to be solved or a result to be obtained. "General statements" of desired results "that fail to explain how the computer performs the claimed functions may leave the outer boundaries of the claim difficult to decipher." FTC, *The Evolving IP Marketplace* 100 (citing *Halliburton Oil Well Cementing Co. v. Walker*, 329 U.S. 1, 12 (1946), and noting that the Court's decision "warn[ed] about the potential ambiguity of functional

claims"). The FTC identified as a major cause the shift by the Federal Circuit away from requiring a patent claim to "'reasonably apprise[] those of skill in the art of its scope.'" *Id.* at 95 (quoting *In re Warmerdam*, 33 F.3d 1354, 1361 (Fed. Cir. 1994), and citing *Exxon Research & Eng'g Co. v. United States*, 265 F.3d 1371, 1375 (Fed. Cir. 2001)). The FTC accordingly urged courts to do more to "focus on indefiniteness [and] to address functional claiming in general, in order to ensure disclosure of what is within and what is outside of the patent." *Id.* at 102.

Indefiniteness is becoming an even greater problem as more patents are issued by the Patent and Trademark Office and more extant patents are being enforced by patent-assertion entities ("PAEs"). This Court noted in 1877 that "[t]he growth of the patent system . . . ha[d] reached a stage in its progress where the variety and magnitude of the interests involved require accuracy, precision, and care in the preparation of all the papers on which the patent is founded." *Merrill*, 94 U.S. at 573. As of 1877, the Patent Office had been in operation 40 years and had issued approximately 100,000 patents. With a patent system of that scale, the Court remarked, there could be "no excuse for ambiguous language or vague descriptions. The public should not be deprived of rights supposed to belong to it, without being clearly told what it is that limits these rights." *Id.* Today, more than eight and a half million patents have issued and more than two million of them are unexpired and remain in effect. About five thousand additional patents issue every week.

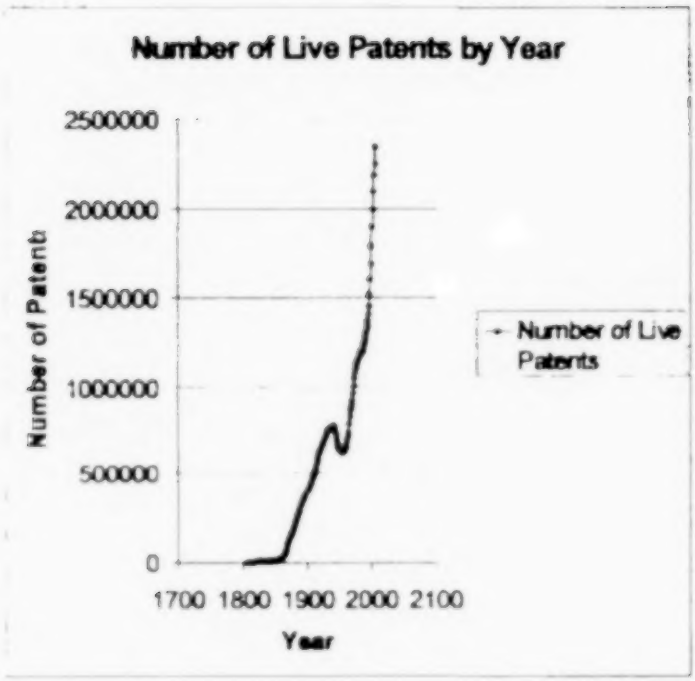

More of these patents are being enforced in lawsuits attacking vast swaths of American commerce. Suits brought by PAEs have tripled in just the last two years, rising from 29% to 62% of all infringement suits. Executive Office of the President, *Patent Assertion and U.S. Innovation* 1 (June 2013). "Estimates suggest that PAEs may have threatened over 100,000 companies with patent infringement last year alone." *Id.* "PAEs take advantage of uncertainty about the scope or validity of patent claims, especially in software-related patents [where] it has been difficult to separate the 'function' of the software (e.g. to produce a medical image) from the 'means' by which that function is accomplished." *Id.* The problem is growing particularly acute for companies like *amici*. About 84% of patent lawsuits filed between 2007 and 2011 by "patent monetization entities" ("PMEs") involved software patents. Gov't Accountability Office, *Intellectual Property: Assessing Factors That Affect Patent Infringement Litigation Could Help Improve*

Patent Quality 22 (Aug. 2013). The GAO blames the increase in patent litigation in large part on "patents with unclear property rights, overly broad claims, or both," in particular "claims in software-related patents [that] are often overly broad, unclear or both." *Id.* at 28.[3]

With more patents and more enforcement, "nothing can be more just and fair, both to the patentee and to the public, than that the former should understand, and correctly describe, just what he has invented, and for what he claims a patent." *Merrill*, 94 U.S. at 573-74.

II. THE PROBLEM OF INDEFINITE PATENTS CANNOT BE SOLVED BY THE PTO ALONE; THE FEDERAL CIRCUIT'S REFUSAL TO POLICE INDEFINITE PATENTS DISTORTS PATENTEE BEHAVIOR AT THE PTO

Efforts by the PTO to improve patent clarity through examination—while critically important—are necessarily insufficient because of institutional limitations on the examination process.[4] The PTO

---

[3] The GAO found that "functional claims and other overly broad claims may allow patent owners who sue for infringement to argue in court that their patent covers (1) an entire technology when it may only cover a small improvement, or (2) future technologies that their patent did not originally intend to cover. For example, representatives from one PME we spoke with said they had successfully sued companies for infringement even though the companies were implementing their idea in a completely different manner than described in their patent—noting that they had patented their invention before the technology to best implement it was actually available." GAO Report 29.

[4] This past June, the President expressed concerns about "patents with overly broad claims" and requested that the PTO "develop strategies to improve claim clarity." White House, *FACT SHEET: White House Task Force on High-Tech Patent Issues* (June 4, 2013). If and when such strategies are adopted,

must examine hundreds of thousands of patent applications each year. The amount of time that an examiner can devote to each application is necessarily limited. On average, an examiner spends a total of 18 hours examining each patent application —including time spent on reviewing the initial application, searching through prior art, comparing prior art to the proposed claims, and writing office actions accepting or rejecting the proposed claims. Dan L. Burk & Mark A. Lemley, *The Patent Crisis and How the Courts Can Solve It* 23 (2009). And there is a predictable information asymmetry between the examiner—who has ordinary skill in the art but who cannot be as familiar with the invention as the applicant (and who likely is less familiar with the specific problem the invention solves)—and the applicant. Moreover, under Federal Circuit law, a patent must issue unless the patent examiner can build a case for *denying* the application. *In re Oetiker*, 977 F.2d 1443, 1445 (Fed. Cir. 1992).[5] The PTO accordingly cannot

---

they would affect only patents to be issued in the future, not the more than two million patents already issued and in effect.

[5] Ordinarily, an applicant bears the burden of proving its entitlement to a government benefit or privilege. *See, e.g.*, *Fagan v. Shinseki*, 573 F.3d 1282, 1286 (Fed. Cir. 2009). But, under Federal Circuit precedent, patent prosecution takes the opposite approach: the patent *examiner* "bears the initial burden, on review of the prior art or on any other ground, of presenting a *prima facie* case of unpatentability." *Oetiker*, 977 F.2d at 1445; *see also* Manual of Patent Examining Procedure § 716.01(d) (8th ed. rev. 9, Aug. 2012) ("MPEP"). In other words, the Federal Circuit requires the PTO effectively to presume that it should award an exclusive property right to anyone who asks for it. If the examiner's initial review does not result in "a *prima facie* case of unpatentability, then without more the applicant is entitled to grant of the patent." *Oetiker*, 977 F.2d at 1445. In order to find that a patent claim is indefinite, the "Examiner Must Establish a Clear Record" of indefiniteness and "must set

act as an efficient or fully effective gatekeeper against vague patents; that responsibility lies in the end with the Article III courts.

At least one Federal Circuit judge has forcefully recognized this very point. In a dissent from denial of panel rehearing in *Enzo Biochem, Inc. v. Applera Corp.*, 605 F.3d 1347 (Fed. Cir. 2010), Federal Circuit Judge Plager noted recent efforts by the PTO to apply a revitalized indefiniteness standard during the application process—namely, the holding of the PTO Board of Patent Appeals and Interferences that, "'if a claim is amenable to two or more plausible claim constructions, the USPTO is justified in requiring the applicant to more precisely define the metes and bounds of the claimed invention by holding the claim unpatentable under [§ 112, ¶ 2] as indefinite.'" *Id.* at 1349 (quoting *Ex parte Miyazaki*, No. 2007-3300, 2008 WL 5105055, at *5 (B.P.A.I. Nov. 19, 2008)). Judge Plager contrasted the Federal Circuit's contrary doctrine as a candidate for reform: The indefiniteness doctrine "could go considerably further in promoting [the public-notice] objective than it currently does, with the not inconsequential benefit of shifting the focus from litigation over claim construction to clarity in claim drafting." *Id.*[6] When this Court

---

forth the specific term or phrase that is indefinite and why the metes and bounds are unclear." MPEP § 2173.02. Placing the burden of showing unpatentability on the PTO examining staff increases the likelihood that ambiguous patents will in fact issue.

[6] *See* 605 F.3d at 1349 ("The court now spends a substantial amount of judicial resources trying to make sense of unclear, overbroad, and sometimes incoherent claim terms. It is time for us to move beyond sticking our fingers in the neverending leaks in the dike that supposedly defines and figuratively surrounds a claimed invention. Instead, we might spend some time figuring out how to support the PTO in requiring that the walls sur-

called for the views of the United States regarding the *certiorari* petition in *Applera*, the government acknowledged that the Federal Circuit "may on occasion have" departed from the proper standard in certain cases by "conducting a definiteness inquiry that in substance was insufficiently rigorous." U.S. Br. 15, *Applera Corp. v. Enzo Biochem, Inc.*, No. 10-426 (U.S. filed May 17, 2011).

A failure by the courts to demand precision in claim drafting reinforces incentives for patent applicants to write vague patents. Today, too many patents are purposely written so that potential infringers have great difficulty reliably determining whether particular activities would infringe. *See* Bessen & Meurer, *Patent Failure* 46-72. Too many patentees simply game the system by drafting patent claims that can be read narrowly during examination—to avoid prior art—and broadly during litigation—to sweep in activities that the patentee never even conceived. *See id.* at 57.[7] And yet, because of

---

rounding the claimed invention be made of something other than quicksand.").

[7] *See also* Michael Risch, *The Failure of Public Notice in Patent Prosecution*, 21 Harv. J.L. & Tech. 179, 188 (2007) ("Patent applicants have an incentive to allow claims to remain vague so that they can mold the claims to fit the future product of a currently unknown, potential infringer or to avoid invalidation if previously undiscovered prior art comes to light."); R. Polk Wagner, *Understanding Patent-Quality Mechanisms*, 157 U. Pa. L. Rev. 2135, 2149 (2009) ("[A] patentee will almost certainly seek substantial vagueness, thus gaining flexibility to effectively alter the scope and description of the patent according to changing circumstances."); Lee Petherbridge, *On the Development of Patent Law*, 43 Loy. L.A. L. Rev. 893, 902 (2010) ("seek vagueness"); Stephen M. McJohn, *Patents: Hiding From History*, 24 Santa Clara Computer & High Tech. L.J. 961, 971 (2008) ("[E]xperts in claim drafting offer the following advice to inven-

the Federal Circuit's permissive approach, fewer than 6% of patent invalidations are based on indefiniteness. John R. Allison & Mark A. Lemley, *Empirical Evidence on the Validity of Litigated Patents*, 26 AIPLA Q.J. 185, 208, tbl. 1 (1998). And, over time, fewer and fewer district court decisions are finding challenged claims to be indefinite. Christa J. Laser, *A Definite Claim on Claim Indefiniteness: An Empirical Study of Definiteness Cases of the Past Decade with a Focus on the Federal Circuit and the Insolubly Ambiguous Standard*, 10 Chi.-Kent J. Intell. Prop. 25, 33 (2010).

III. THE PROBLEM OF INDEFINITENESS SHOULD BE ADDRESSED BY ENFORCING THE STATUTE AND THIS COURT'S PRECEDENTS THAT REQUIRE CLAIMS TO BE REASONABLY CLEAR AT THE TIME THE PATENT ISSUES SO THAT THE PUBLIC CAN KNOW WHAT IS AND WHAT IS NOT COVERED

The Federal Circuit's test for indefiniteness, both on its face and as applied in this case, conflicts with the statute and this Court's precedents.

The Patent Act requires that "[a]n application for patent . . . shall include . . . a specification as prescribed by section 112." 35 U.S.C. § 111(a)(2)(A). Section 112, in turn, requires the patent applicant to define the patent claims precisely: "The specification shall conclude with one or more claims particularly

---

tors and patent drafters: Do not define the terms used in your claims; do not identify the category of invention in the preamble to the claims; do not identify features of the invention as 'important;' and do not even use the word 'invention' in the written description. Such claim drafting has been described as a trend toward 'intentional obscurity.'") (footnote omitted).

pointing out and distinctly claiming the subject matter which the applicant regards as his invention." *Id.* § 112, ¶ 2.

This Court has stated that "the very purpose" of a patent claim is to "mak[e] the patentee define *precisely* what his invention is; and it is unjust to the public, as well as an evasion of the law, to construe it in a manner different from the plain import of its terms." *White v. Dunbar*, 119 U.S. 47, 52 (1886) (emphasis added); *see Merrill*, 94 U.S. at 573-74; *Evans v. Eaton*, 20 U.S. (7 Wheat.) 356, 434 (1822) (a patent must give "warning": "to put the public in possession of what the [patentee] claims as his own invention, so as . . . to guard against prejudice or injury from the use of an invention which the party may otherwise innocently suppose not to be patented," and "at the same time . . . taking from the inventor the means of practising upon the credulity or the fears of other persons, by pretending that his invention is more than what it really is"). "This clarity is essential to promote progress, because it enables efficient investment in innovation. A patent holder should know what he owns, and the public should know what he does not." *Festo Corp. v. Shoketsu Kinzoku Kogyo Kabushiki Co.*, 535 U.S. 722, 730-31 (2002).

The Federal Circuit's approach cannot be squared with these requirements. In the decision below, the Federal Circuit held that a court cannot invalidate a claim as indefinite unless the claim is found to have no discernible meaning. "[W]e have not insisted that claims be plain on their face in order to avoid a determination of invalidity for indefiniteness. 'If the meaning of the claim is discernible, even though the task may be formidable and the conclusion may be

one over which reasonable persons will disagree, we have held the claim sufficiently clear to avoid invalidity on indefiniteness grounds.'" App. 21a-22a (citations omitted; quoting *Exxon*, 265 F.3d at 1375). "A claim is indefinite only when it is 'not amenable to construction' or 'insolubly ambiguous.'" App. 13a (quoting *Datamize, LLC v. Plumtree Software, Inc.*, 417 F.3d 1342, 1347 (Fed. Cir. 2005)). Whether a claim term has discernible meaning, the Federal Circuit held, requires the term to be construed by a court in a *Markman* hearing usually following discovery, and too often following an appeal.

The Federal Circuit's standard is fundamentally flawed in three important respects. First, the test is applied too late. Here, it wasn't until review of the district court's claim construction on appeal that the public knew what the patent covered. Second, the claim did not provide clear notice of what it covered on its face. This patent is an example where "reasonable persons will disagree" about what the claim covers; indeed, the four judges below construed the claim three different ways. Third, the court's test permits a finding that a claim is definite when it can discern the *function* the invention is supposed to perform even when the patent is agnostic about *how* to perform it—thereby preempting all future solutions to the same problem.

A. Clarity Is Required When the Patent Issues

Notice of what a patent covers is needed at the time the patent issues to be "fair . . . to the public." *Merrill*, 94 U.S. at 573. Under the Federal Circuit's standard, however, such notice may not be available from the published claim itself but emerges only after full construction of the claim (here, after *appellate* claim construction)—meaning that the public is

threatened with the expense and delay of litigation despite the fact that a claim is indefinite on its face.

Delaying notice of what the patent covers taxes and deters not only innovation but other investments in infrastructure and jobs. Productive firms are regularly sued for infringing patents the bounds of which cannot be discerned absent long and costly litigation. These firms may choose to avoid an area entirely because if their own invention succeeds it will be subject to exclusion or royalty payments to the holder of the indefinite patent. If the only way to determine what is already patented is to endure litigation to construe claim terms, not only innovators but members of the public must add the costs of litigation to other variable costs of doing business. The statute, as written, places the burden of reducing the social costs of ambiguity on the party best able to reduce them—the applicant. By contrast, the Federal Circuit improperly shifts these costs away from the applicant and towards the public, which cannot reduce them. Such a legal rule not only is contrary to the statute, but meets the very definition of inefficiency. *See* Ronald H. Coase, *The Problem of Social Cost*, 3 J.L. & Econ. 1 (1960).

Tolerating ambiguous claim scope (until the claims are definitively construed in litigation) encourages litigation both because litigation is needed to establish the boundaries of the patent claim and because uncertainty over claim scope itself makes litigation more likely. Landes & Posner, *The Economic Structure of Intellectual Property Law* 347 ("Other things being equal, the more certain law is, the less likely is litigation."); Herbert Hovenkamp, *Innovation and the Domain of Competition Policy*, 60 Ala. L. Rev. 103, 121 (2008) ("[T]he more poorly patent boundaries are

defined, the higher are litigation costs in relation to patent value."). Waiting years and spending millions of dollars in litigation to find out what a low-value patent covers is precisely the situation where the property right may not be worth creating in the first place. Harold Demsetz, *Toward a Theory of Property Rights*, 57 Am. Econ. Rev. 347, 350-53 (1967) (when costs of enforcing property rights are disproportionate to the value of the rights, the social value of the rights will be slight or even negative); Herbert Hovenkamp, *Competition for Innovation*, 2012 Colum. Bus. L. Rev. 799, 826-27 ("[T]he patent system has not taken the social value of notice seriously. In general, the more intangible a property right is, and the more ambiguous its boundaries, the more important it is that notice be provided. Further, the cost of providing notice of a particular property right is almost always less than the cost of searching among many.").

This case exemplifies the failure to provide timely notice. The patent-in-suit issued in 1994. The patentee sued the petitioner in 2004 and again in 2010. In 2012, the district court held the patent claim was indefinite. Finally, in 2013, after the patent expired, the Federal Circuit struggled to find a "discernible meaning" and in two separate opinions provided two different interpretations of the claim. During the entire life of this patent, the public was deprived of the "*quid pro quo*" for the patent right—the "precision of disclosure [that was] essential to warn the industry concerned of the precise scope of the monopoly asserted." *Universal Oil Prods. Co. v. Globe Oil & Ref. Co.*, 322 U.S. 471, 484 (1944); *cf. FCC v. Fox Television Stations, Inc.*, 132 S. Ct. 2307, 2317 (2012) ("A fundamental principle in our legal system is that laws which regulate persons or enti-

ties must give fair notice of conduct that is forbidden or required.").

B. The Claim Must Be Reasonably Clear on Its Face

The Federal Circuit's substantive standard for indefiniteness conflicts also with the statute and this Court's precedents by failing to require that the claim be definite on its face, App. 21a ("we have not insisted that claims be plain on their face"), and instead allowing the claim to be susceptible to different meanings "over which reasonable persons will disagree," App. 22a (internal quotations omitted). The Federal Circuit held that "[g]eneral principles of claim construction apply when determining indefiniteness." App. 14a. Courts are to "primarily consider the intrinsic evidence consisting of the claim language, the specification, and the prosecution history. In addition . . . courts may consider certain extrinsic evidence in resolving disputes regarding indefiniteness . . . [including] evidence not publicly available at the time of the invention." *Id.* (citations omitted). Only if, after what may be a "formidable" task, the court finds that the claim is "insolubly ambiguous" will the claim be held indefinite. App. 13a, 22a (internal quotations omitted).

The statute requires the applicant to particularly point out and distinctly claim what is invented. That requirement is inconsistent with a standard that directs courts to expend "formidable" efforts just to understand the extent of claims. Here, the Federal Circuit was apparently unconcerned by the fact that the critical claim term was construed three different ways by four judges. It is an error "to suppose that a claim in a patent is like a nose of wax, which may be turned and twisted in any direction, by merely refer-

ring to the specification, so as to make it include something more than, or something different from, what its words express. . . . The claim is a statutory requirement, prescribed for the very purpose of making the patentee define precisely what his invention is." *White*, 119 U.S. at 51-52. Indeed, the Patent Office applies the same statutory provision but does not permit claims to be susceptible to multiple interpretations. "[I]f the language of a claim . . . is such that a person of ordinary skill in the relevant art would read it with more than one reasonable interpretation, then a rejection under § 112, ¶ 2 is appropriate." Notice, *Supplementary Examination Guidelines for Determining Compliance With 35 U.S.C. 112 and for Treatment of Related Issues in Patent Applications*, 76 Fed. Reg. 7162, 7164 (Feb. 9, 2011); *see Miyazaki*, 2008 WL 5105055, at *5. The Federal Circuit's approach to a critical patent doctrine, once again, departs from the express words of the Patent Act, and, once again, this Court should intervene. *E.g.*, *KSR Int'l Co. v. Teleflex Inc.*, 550 U.S. 398, 407 (2007) (granting *certiorari* because the Federal Circuit decided a case "in a manner contrary to [the Patent Act] and our precedents"); *eBay Inc. v. MercExchange, L.L.C.*, 547 U.S. 388, 392 (2006) (Federal Circuit ignored the "'principles of equity'" expressly stated in the injunction statute) (quoting 35 U.S.C. § 283).

C. A "Functional" Construction Cannot Resolve Indefiniteness

The category of indefinite claims overlaps with—and displays the same ills as—improper "functional" claims. As the FTC found in its study of patent notice, *supra* pp. 2-3, a critical category of indefinite patents are ones that describe a problem or a

result, as opposed to describing a particular way that achieves the result. The claim construction the Federal Circuit majority adopted produces such a functional claim. The "spaced relationship" of the claim was defined by the majority to mean whatever spacing works to remove the electrical signal from the muscles that is interfering with the desired heart muscle signal. App. 20a. In other words, the court held the claim definite because it could discern the function that the claimed "spaced relationship" was intended to perform—even though the patent was not particular or distinct about how to perform it. In the absence of a definite solution to the "how to" problem, the patent should never have issued. This Court long ago held that the statutory definiteness requirement for claims—now in § 112, ¶ 2, but in the similarly worded pre-1952 patent statute as well—prohibited claim language that was purely functional at the point of novelty over prior art. *Halliburton*, 329 U.S. at 8-10 (relying on, *e.g.*, *General Elec. Co. v. Wabash Appliance Corp.*, 304 U.S. 364, 371 (1938), and *Holland Furniture Co. v. Perkins Glue Co.*, 277 U.S. 245, 256-57 (1928)).

In *Halliburton*, the Court invalidated a claim that identified the very point of novelty of the claimed combination "in terms of what it will do rather than in terms of its own physical characteristics or its arrangement in the new combination apparatus." *Id.* at 9. The Court condemned "the broadness, ambiguity, and overhanging threat of the functional claim" at issue, which, in the pertinent element, covered any device that performed the function of clearly and regularly catching and recording echoes from tubing joints in oil wells. *Id.* at 12. "Just how many different devices there are of various kinds and characters

which would serve to" perform that function "we do not know," the Court explained, and, "unless frightened from the course of experimentation by broad functional claims like these, inventive genius may evolve many more devices to accomplish the same purpose." *Id.* *See Ibormeith IP, LLC v. Mercedes-Benz USA, LLC*, No. 2013-1007, slip op. 7, 11-12 (Fed. Cir. Oct. 22, 2013) (Taranto, J.) (functionally defined claim held indefinite because it was not limited to a particular solution; merely providing figures that "a person of ordinary skill in the art *could* use to design his or her own method" of achieving function insufficient).

IV. THE PRESUMPTION OF VALIDITY DOES NOT JUSTIFY EXTRAORDINARY EFFORTS TO SALVAGE INDEFINITE CLAIMS

The Federal Circuit defended its current rule based on the presumption that patents are valid. App. 22a. "By embracing this standard, 'we accord respect to the statutory presumption of patent validity, and we protect the inventive contribution of patentees, even when the drafting of their patents has been less than ideal.'" *Id.* (quoting *Exxon*, 265 F.3d at 1375).[8]

But this Court's decisions make clear that a patent must first be definite—"fair upon its face"—to enjoy a presumption of validity. *Radio Corp. of Am. v. Radio Eng'g Labs., Inc.*, 293 U.S. 1, 8 (1934) (applying common-law presumption of validity prior to 1952 amendment of the Patent Act). In one of this Court's

---

[8] The Federal Circuit has further strived to avoid invalidating ambiguous patents by requiring indefiniteness to be shown by "clear and convincing evidence." *E.g., Halliburton Energy Servs., Inc. v. M-I LLC*, 514 F.3d 1244, 1249-50 (Fed. Cir. 2008); *but see Ibormeith*, slip op. 7 ("adequate disclosure is a question of law that we decide *de novo*").

earliest patent cases, the Court specifically rejected the argument that the patentee be given "the benefit of a liberal construction in support of the patent" in order to "uphold" the action of the Patent Office. *Merrill*, 94 U.S. at 572-73; *see id.* (rather than strain to give "full effect to all that is found in the application on which the Patent Office acted, [and] uphold that which was really invented, and which comes within any fair interpretation of the patentee's assertion of claim," holding claim invalid because the patentee had failed to give "the world . . . fair notice of what he claims, of what his patent covers"). This Court's decisions instead emphasize that "[t]he [patent] monopoly is a property right; and like any property right, its boundaries should be clear." *Festo*, 535 U.S. at 730-32; *see Markman*, 517 U.S. at 373 ("[i]t has long been understood that a patent must describe the exact scope of an invention"); *United Carbon Co. v. Binney & Smith Co.*, 317 U.S. 228, 236 (1942) ("The statutory requirement of particularity and distinctness in claims is met only when they clearly distinguish what is claimed from what went before in the art and clearly circumscribe what is foreclosed from future enterprise."); *see also Microsoft Corp. v. i4i Ltd. P'ship*, 131 S. Ct. 2238, 2253 (2011) (Breyer, J., concurring) ("[w]here the ultimate question of patent validity turns on the correct answer to legal questions"—including whether the patent applicant described his claims properly under § 112—"today's strict standard of proof has no application").

What a patent covers is a distinct question from whether it is valid, even though indefiniteness may be cause for invalidating the patent. And the particular errors in the Federal Circuit's decision below—holding that claim scope need not be particular and distinct when the patent issues; that a claim is defi-

nite even when it is subject to multiple reasonable interpretations; and that a claim can be made definite by defining it in terms of an achieved function—can be reviewed and corrected without regard to the presumption of validity.

CONCLUSION

The Court should grant the petition.

Respectfully submitted.

JEFFREY H. DEAN
ASSOCIATE GENERAL COUNSEL, LITIGATION & REGULATORY
AMAZON.COM, INC.
440 Terry Avenue North
Seattle, WA 98109-5210
(206) 740-0521

SUZANNE MICHEL
SENIOR PATENT COUNSEL
GOOGLE INC.
1101 New York Avenue, N.W.
Washington, D.C. 20005
(202) 346-1373

DION MESSER
SR. IP CORPORATE COUNSEL
LIMELIGHT NETWORKS, INC.
222 South Mill Avenue
8th Floor
Tempe, AZ 85281
(602) 850-4833

DOUGLAS LUFTMAN
VICE PRESIDENT, INNOVATION SERVICES & CHIEF INTELLECTUAL PROPERTY COUNSEL
NETAPP
495 East Java Drive
Sunnyvale, CA 94089
(408) 822-6521

JOHN THORNE
Counsel of Record
AARON M. PANNER
CHRISTOPHER C. FUNK
KELLOGG, HUBER, HANSEN, TODD, EVANS & FIGEL, P.L.L.C.
1615 M Street, N.W.
Suite 400
Washington, D.C. 20036
(202) 326-7900
(jthorne@khhte.com)

SAMIR N. PANDYA
SENIOR IP COUNSEL
SAP – GLOBAL LITIGATION GROUP
3999 West Chester Pike
Newtown Square, PA 19073
(610) 661-9767

ANDREW R. ETKIND
VICE PRESIDENT AND GENERAL COUNSEL
GARMIN INTERNATIONAL, INC.
1200 E. 151st Street
Olathe, KS 66062
(913) 397-8200

TIMOTHY K. WILSON
SENIOR IP COUNSEL
SAS INSTITUTE INC.
701 SAS Campus Drive
Cary, NC 27513
(919) 531-3240

ZION MAFFEO
ESRI
380 New York Street
Redlands, CA 92373
(909) 793-2853

October 23, 2013

DIANE K. LETTELLEIR
SENIOR MANAGING COUNSEL
LITIGATION
J.C. PENNEY CORPORATION, INC.
6501 Legacy Drive, MS 1122
Plano, TX 75024
(972) 431-5012

LEE C. CHENG
CHIEF LEGAL OFFICER
NEWEGG INC.
16839 E. Gale Avenue
City of Industry, CA 91745
(626) 271-9700

AMICUS CURIAE BRIEF

Supreme Court, U.S.
FILED
OCT 23 2013
OFFICE OF THE CLERK

No. 13-369

IN THE

Supreme Court of the United States

NAUTILUS, INC.,

Petitioner,

v.

BIOSIG INSTRUMENTS, INC.,

Respondent.

On Petition for Writ of Certiorari to the United States Court of Appeals for the Federal Circuit

BRIEF OF PUBLIC KNOWLEDGE AND THE ELECTRONIC FRONTIER FOUNDATION AS *AMICI CURIAE* IN SUPPORT OF PETITIONER

CHARLES DUAN
PUBLIC KNOWLEDGE
1818 N St NW, Suite 410
Washington, DC 20036
(202) 861-0020
cduan@publicknowledge.org

DANIEL NAZER
Counsel of Record
JULIE P. SAMUELS
MICHAEL BARCLAY
ELECTRONIC FRONTIER FOUNDATION
815 Eddy Street
San Francisco, CA 94109
(415) 436-9333
daniel@eff.org

Counsel for Amici Curiae

Library of Congress
Law Library

TABLE OF CONTENTS

TABLE OF CONTENTS i

TABLE OF AUTHORITIES ii

INTEREST OF *AMICI CURIAE* 1

SUMMARY OF ARGUMENT 2

ARGUMENT 4

I. The Federal Circuit's Overly Strict Test for Indefiniteness of Patent Claims Invites Abuse and Impedes Innovation 4

A. The Federal Circuit's Test Conflicts with This Court's Precedents 5

B. The Misapplication of Indefiniteness Creates an Imbalance in Justice 7

C. Sanctioned Vagueness Has Led to Abusive Business Practices of Asserting Patents 8

D. The Lack of Clarity in Patents Has Caused Widespread, Well-Known Harm . . 9

II. This Case Presents a Rare and Ideal Vehicle for Assessing the Standard of Indefiniteness 12

A. The Current Rule on Indefiniteness Has Resulted in a Minuscule Pool of Cases on this Issue 12

B. The Claim Term in this Case Cleanly Presents the Issue of Indefiniteness . . . 15

CONCLUSION 16

TABLE OF AUTHORITIES

Cases

Atmel Corp. v. Info. Storage Devices, Inc., 198 F.3d 1374 (Fed. Cir. 1999) 6

Bilski v. Kappos, 130 S. Ct. 3218 (2010) 1

Biosig Instruments, Inc. v. Nautilus, Inc., 715 F.3d 891 (Fed. Cir. 2013) 15–16

CBT Flint Partners, LLC v. Return Path, Inc., 654 F.3d 1353 (Fed. Cir. 2011) 13

Datamize, LLC v. Plumtree Software, Inc., 417 F.3d 1342 (Fed. Cir. 2005) 7, 11

Deere & Co. v. Bush Hog, LLC, 703 F.3d 1349 (Fed. Cir. 2012) 13–14

Elec. Storage Battery Co. v. Shimadzu, 307 U.S. 5 (1939) 8

Enzo Biochem, Inc. v. Applera Corp., 599 F.3d 1325 (Fed. Cir. 2010) 13

Exxon Research & Eng'g Co. v. United States, 265 F.3d 1371 (Fed. Cir. 2001) 4, 6

Festo Corp. v. Shoketsu Kinzoku Kogyo Kabushiki Co., 535 U.S. 722 (2002) 5, 11

Funai Elec. Co. v. Daiwoo Elecs. Corp., 616 F.3d 1357 (Fed. Cir. 2010) 13

Gen. Elec. Corp. v. Wabash Appliance Corp., 304 U.S. 364 (1938) 5

HTC Corp. v. IPCom GmbH & Co., KG, 667 F.3d 1270 (Fed. Cir. 2012) 13

Haemonetics Corp. v. Baxter Healthcare Corp., 607 F.3d 776 (Fed. Cir. 2010) 13

Halliburton Energy Servs., Inc. v. M-I LLC, 514 F.3d 1244 (Fed. Cir. 2008) 6

Hearing Components, Inc. v. Shure Inc., 600 F.3d 1357 (Fed. Cir. 2010) 13

Honeywell Int'l, Inc. v. United States, 596 F.3d 800 (Fed. Cir. 2010) 13

IGT v. Bally Gaming Int'l, Inc., 659 F.3d 1109 (2011) 13

Lazare Kaplan Int'l, Inc. v. Photoscribe Techs., Inc., 628 F.3d 1359 (Fed. Cir. 2010) 7

Markman v. Westview Instruments, Inc., 517 U.S. 370 (1996) 5

McClain v. Ortmayer, 141 U.S. 419 (1891) 4

Microsoft Corp. v. i4i Ltd. P'ship, 131 S. Ct. 2238 (2011) 1, 6

Personalized Media Communications, LLC v. Int'l Trade Comm'n, 161 F.3d 696 (Fed. Cir. 1998) . . 6

Power-One, Inc. v. Artesyn Techs., Inc., 599 F.3d 1343 (Fed. Cir. 2010) 13

Quanta Computer, Inc. v. LG Elecs. Corp., 553 U.S. 617 (2008) 1

Rembrandt Data Techs., LP v. AOL, LLC, 641 F.3d 1331 (Fed. Cir. 2011) 13

Spansion, Inc. v. Int'l Trade Comm'n, 629 F.3d 1331 (Fed. Cir. 2010) 13

Star Scientific, Inc. v. R.J. Reynolds Tobacco Co., 655 F.3d 1364 (Fed. Cir. 2011) 13

Teva Pharmaceuticals USA, Inc. v. Sandoz, Inc., 723 F.3d 1363 (Fed. Cir. 2013) 13–14

Trading Techs. Int'l, Inc. v. eSpeed, Inc., 595 F.3d 1340 (Fed. Cir. 2010) 13

United Carbon Co. v. Binney & Smith Co., 317 U.S. 228 (1942) 4, 9

Wellman, Inc. v. Eastman Chem. Co., 642 F.3d 1355 (Fed. Cir. 2011) 13

White v. Dunbar, 119 U.S. 47 (1886) 5

Constitutional Provisions

U.S. Const. art. 1, § 8, cl. 8 . . . . . 3, 9

Statutes

35 U.S.C. § 112, ¶ 2 (2011) 4–6, 12–13

35 U.S.C. § 112, ¶ 6 (2011) 13

Fed. R. Civ. P. 8(d)(2) 8

Other Sources

James Bessen & Michael J. Meurer, *Patent Failure: How Judges, Bureaucrats, and Lawyers Put Innovators at Risk* (2008) 9

James Bessen et al., *The Private and Social Costs of Patent Trolls*, Regulation, Winter 2011–2012, at 26 8

Brief for the United States as Amicus Curiae, *Applera Corp. v. Enzo Biochem, Inc.*, 131 S. Ct. 847 (2011) (No. 10-426) 15

Tun-Jen Chiang, *Fixing Patent Boundaries*, 108 Mich. L. Rev. 523 (2010) 7

Fed. Trade Comm'n, *The Evolving IP Marketplace: Aligning Patent Notice and Remedies with Competition* (2011) 8

Phil Goldberg, Progressive Policy Inst., *Stumping Patent Trolls on the Bridge to Innovation* (2013) 7, 9

Kirk M. Hartung, *Claim Construction: Another Matter of Chance and Confusion*, 88 J. Pat. & Trademark Off. Soc'y 831 (2006) 11

Christa J. Laser, *A Definite Claim On Claim Indefiniteness*, 10 Chi.-Kent J. Intell. Prop. 25 (2010) 10

Mark A. Lemley, *The Myth of the Sole Inventor*, 110 Mich. L. Rev. 709 (2012) 10

Lisa Larrimore Ouellette, *Do Patents Disclose Useful Information?*, 25 Harv. J.L. & Tech. 545 (2012) 10

David Segal, *Has Patent, Will Sue: An Alert to Corporate America*, New York Times, July 14, 2013, at BU1 9

Rich Steeves, *New Report Examines the Economic Cost of Patent Trolls* (Oct. 11, 2013), http://www.insidecounsel.com/2013/10/11/new-report-examines-the-economic-cost-of-patent-tr . . 11

Rob Weir, *How Not to Read a Patent* (Aug. 13, 2009), http://www.robweir.com/blog/2009/08/how-not-to-read-patent.html 11

INTEREST OF *AMICI CURIAE*

The Electronic Frontier Foundation ("EFF")[1] is a non-profit civil liberties organization that has worked for more than 20 years to protect consumer interests, innovation, and free expression in the digital world. EFF and its 24,000 active members have a strong interest in helping the courts and policy-makers in striking the appropriate balance between intellectual property and the public interest.

Public Knowledge is a non-profit organization that is dedicated to preserving the openness of the Internet and the public's access to knowledge; promoting creativity through balanced intellectual property rights; and upholding and protecting the rights of consumers to use innovative technology lawfully. As part of this mission, Public Knowledge advocates on behalf of the public interest for a balanced patent system, particularly with respect to new and emerging technologies.

Both EFF and Public Knowledge have previously served as *amici* in key patent cases. *E.g.*, *Microsoft Corp. v. i4i Ltd. P'ship*, 131 S. Ct. 2238 (2011); *Bilski v. Kappos*, 130 S. Ct. 3218 (2010); *Quanta Computer, Inc. v. LG Elecs. Corp.*, 553 U.S. 617 (2008).

---

[1]No counsel for a party authored this brief in whole or in part, and no such counsel or party made a monetary contribution intended to fund the preparation or submission of this brief. No person other than *amici curiae*, or their counsel, made a monetary contribution intended to fund its preparation or submission. Pursuant to Supreme Court Rule 37.2(a), *amici* provided at least ten days' notice of its intent to file this brief, to counsel of record for all parties. The parties have consented to the filing of this brief and such consents are being submitted.

SUMMARY OF ARGUMENT

A developer wishes to build a hotel by a highway, and is searching the records of deeds for a prospective plot of land. The search reveals a recordation of an easement stating in part, "*the western boundary is in a spaced relationship with the highway.*"

What can the developer do? "Spaced relationship" could mean a foot from the highway, or a yard, or a mile. The developer could guess at the meaning, but a wrong guess could render the entire investment in building the hotel a waste. Should the case be brought to court, different judges or juries could reasonably disagree on the meaning. Worse yet, when the easement owner sues the developer, the owner will have the benefit of hindsight in making his argument for interpreting the property claim, but the developer has no such benefit when choosing where to build the hotel. The cards are stacked against the developer, a deadweight loss for the hotel business and for the economy at large.

Beyond creating this uncertainty for developers, allowing ambiguous words in property claims would encourage owners of real property to exploit such ambiguities, so that they might later alter or stretch the grant. Rather than providing adequate notice to the public, such deeds would deter the public from improving land for fear of the breadth of such vaguely worded instruments.

Such ambiguous descriptions of the metes and bounds of real property would never be tolerated, but for years the Federal Circuit has tolerated equally ambiguous descriptions of the metes and bounds of patents. Indeed, the term "spaced relationship," so

clearly improper in the hypothetical example above, is the exact term held "definite" by that court in the present case for petition.

Certainly patents differ in many respects from real property, but clarity in the boundaries should not be one such difference. The claims of a patent serve a public notice function, informing others of what may and may not be done. But the Federal Circuit's "insolubly ambiguous" test for indefiniteness of patent claims abrogates this public notice function, permits the proliferation of indeterminate claims, invites abuse by clever patent drafters, and contributes to a general and widespread sense that patents are unclear and uninformative documents. The test thus fails to serve the constitutional mandate that patents "promote the Progress of Science and the useful Arts." U.S. Const. art. 1, § 8, cl. 8.

To reverse these problematic trends, the Court should disapprove the Federal Circuit's "insolubly ambiguous" test and restore a proper interpretation of indefiniteness of patent claims. To do so, it must review the present case. The Federal Circuit's test for indefiniteness is so monumentally difficult to satisfy that appealing a case on this issue is almost certainly futile and almost never done. Should the present case not be reviewed, another appropriate vehicle for review may not arise.

Because the Federal Circuit's standard for claim indefiniteness conflicts with both the plain language of the Patent Act and decisions of this Court, because the "insolubly ambiguous" standard encourages patentees to craft vague claims and creates uncertainty for the public, and because this case cleanly presents the issue for review, this Court should grant certiorari.

ARGUMENT

I. The Federal Circuit's Overly Strict Test for Indefiniteness of Patent Claims Invites Abuse and Impedes Innovation

The Patent Act requires that a patent must conclude with "one or more claims *particularly pointing out and distinctly claiming* the subject matter which the inventor or a joint inventor regards as the invention." 35 U.S.C. § 112, ¶ 2 (2011) (emphasis added). This provision establishes a key requirement of the patent system: patents must inform potential infringers, in advance, of what the claims cover and what they do not cover. As this Court has explained, a patent claim secures "all to which [the patentee] is entitled" while "appris[ing] the public of what is still open to them." *McClain v. Ortmayer*, 141 U.S. 419, 424 (1891). Ambiguous patent claims create a "zone of uncertainty which enterprise and experimentation may enter only at the risk of infringement claims" and thereby "discourage invention only a little less than unequivocal foreclosure of the field." *United Carbon Co. v. Binney & Smith Co.*, 317 U.S. 228, 236 (1942).

The Federal Circuit takes a different approach. It holds that a patent claim is definite unless it is "insolubly ambiguous." *Exxon Research & Eng'g Co. v. United States*, 265 F.3d 1371, 1375 (Fed. Cir. 2001) (*Exxon Research*). Under this test, a patent claim is valid "if the meaning of the claim is discernible, even though...the conclusion may be one over which reasonable persons will disagree." *Id.*

This "insolubly ambiguous" test is improper for at least three reasons explained below. First, the test conflicts with this Court's long-established precedent

on indefiniteness of patent claims under § 112, ¶ 2. Second, the test creates an untenable dilemma for patent defendants, effectively preventing them from fully arguing their cases. Third, the test encourages the drafting of unclear and ambiguous patent claims. These factors all contribute to a widespread and well-known problem of unclarity in patents. By granting certiorari in this case, the Court can take a first step in correcting these problematic trends.

A. The Federal Circuit's Test Conflicts with This Court's Precedents

Patent "boundaries should be clear. This clarity is essential to promote progress, because it enables efficient investment in innovation." *Festo Corp. v. Shoketsu Kinzoku Kogyo Kabushiki Co.*, 535 U.S. 722, 731 (2002). The purpose of a patent claim is to define the scope of the patentee's right. *Markman v. Westview Instruments, Inc.*, 517 U.S. 370, 373 (1996). A clear definition of patent scope serves multiple purposes: the "limits of a patent must be known for the protection of the patentee, the encouragement of the inventive genius of others, and the assurance that the subject of the patent will be dedicated ultimately to the public." *Gen. Elec. Corp. v. Wabash Appliance Corp.*, 304 U.S. 364, 369 (1938).

As this Court explained over 100 years ago, "[t]he claim is a statutory requirement, prescribed for the very purpose of making the patentee define precisely what his invention is." *White v. Dunbar*, 119 U.S. 47, 52 (1886). The Federal Circuit ignores this. Instead of requiring that claims precisely define the invention, the Federal Circuit requires only that, years later, they be "amenable to construction" by a

court, "*however difficult* that task may be." *Exxon Research*, 265 F.3d at 1375 (emphasis added). In effect, the Federal Circuit's "insolubly ambiguous" standard has repealed the Patent Act's requirement that applicants "distinctly claim[] the subject matter" of their inventions. § 112, ¶ 2.

By expressly tolerating ambiguity in patent claims, the Federal Circuit has removed an essential plank of a well-functioning patent system. The court's error can be traced to a misapplication of the evidentiary burden applied in patent cases. The Federal Circuit has reasoned that indefiniteness "requires such an exacting standard" because an accused infringer must "show[] by clear and convincing evidence that a skilled artisan could not discern the boundaries of the claim." *Halliburton Energy Servs., Inc. v. M-I LLC*, 514 F.3d 1244, 1249 (Fed. Cir. 2008).

It is true that invalidity defenses must be proved by clear and convincing evidence. *Microsoft Corp. v. i4i Ltd. P'ship*, 131 S. Ct. 2238, 2242 (2011). But, as a claim construction issue, the "determination of claim indefiniteness is a legal conclusion." *Personalized Media Communications, LLC v. Int'l Trade Comm'n*, 161 F.3d 696, 705 (Fed. Cir. 1998); *see also Atmel Corp. v. Info. Storage Devices, Inc.*, 198 F.3d 1374, 1378 (Fed. Cir. 1999). There is no reason to apply an evidentiary burden when developing the legal standard for indefiniteness.

In sum, the Federal Circuit's "insolubly ambiguous" test directly conflicts with this Court's principles and precedents on indefiniteness of patent claims.

B. The Misapplication of Indefiniteness Creates an Imbalance in Justice

The Federal Circuit's erroneous standard creates unfairness for defendants, who "disproportionately" bear the "risks and harms resulting from ambiguous patents." Phil Goldberg, Progressive Policy Inst., *Stumping Patent Trolls on the Bridge to Innovation* 4 (2013). This occurs specifically in at least two ways. First, the benefit of hindsight favors those who assert patents. Those who make products, as well as their investors, must guess at the meaning of patent claims, and a wrong guess puts their investment at risk. But once an investment is made, the patentee has the benefit of hindsight and will argue for an interpretation that covers the accused product. Thus, the legal doctrines "give the patentee the benefit of later information, which creates a patentee preference for vagueness." Tun-Jen Chiang, *Fixing Patent Boundaries*, 108 Mich. L. Rev. 523, 573 (2010).

Second, the "insolubly ambiguous" standard unfairly prevents parties from fully presenting their cases in litigation, by forcing them to choose between offering and arguing for a favorable claim construction on the one hand, and alleging the indefiniteness of the claim on the other. Under the Federal Circuit standard, a claim is indefinite only when it is "not amenable to construction," *Datamize, LLC v. Plumtree Software, Inc.*, 417 F.3d 1342, 1347 (Fed. Cir. 2005), the proposal of a construction for that claim entirely undermines the argument for indefiniteness. *Cf. Lazare Kaplan Int'l, Inc. v. Photoscribe Techs., Inc.*, 628 F.3d 1359, 1376 (Fed. Cir. 2010) (holding that failure to raise a claim construction argument waives that argument on appeal).

This forced choice between arguments conflicts with the general policy favoring alternative pleadings. It has long been the law that "[a]lternative and inconsistent defenses may be pleaded." *Elec. Storage Battery Co. v. Shimadzu*, 307 U.S. 5, 16 (1939); *see also* Fed. R. Civ. P. 8(d)(2) ("A party may set out 2 or more statements of a claim or defense alternatively or hypothetically. . . ."). By preventing defending parties from arguing for both indefiniteness and favorable claim constructions, the "insolubly ambiguous" test blocks those parties from fully presenting their cases and thus creates an imbalance in justice disfavoring them.

For these reasons, the Federal Circuit's standard for indefiniteness is not only substantively erroneous, but also unfair to litigants.

C. Sanctioned Vagueness Has Led to Abusive Business Practices of Asserting Patents

The "insolubly ambiguous" test has fostered business practices that abuse the patent system by exploiting this sanctioned vagueness in patent claims. One economist traced how patents with "fuzzy boundaries" have created "a business opportunity based on acquiring patents that can be read to cover existing technologies and asserting those patents." James Bessen et al., *The Private and Social Costs of Patent Trolls*, Regulation, Winter 2011–2012, at 26, 34. Similarly, stakeholders reported to the Federal Trade Commission that the patent system "generally creates 'an incentive to be as vague and ambiguous as you can with your claims' and to 'defer clarity at all costs.'" Fed. Trade Comm'n, *The Evolving IP*

Marketplace: Aligning Patent Notice and Remedies with Competition 85 (2011).[2]

In this way, ambiguous patents—mostly relating to software—have fed the recent explosion in litigation by non-practicing entities (also known as patent trolls). By revitalizing the law of indefiniteness, this Court could improve patent quality and reduce opportunistic patent litigation.

D. The Lack of Clarity in Patents Has Caused Widespread, Well-Known Harm

The Federal Circuit's laxity in policing vagueness and ambiguity in patents has led to a popular view that patents are unintelligible documents with little value to the scientific or engineering communities. This is the manifestation of the "zone of uncertainty" that this Court presciently feared would result from indefinite claims, *United Carbon Co.*, 317 U.S. at 236, and it is an unfortunate development given the constitutional mandate that patents "promote the Progress of Science and the useful Arts," U.S. Const. art. 1, § 8, cl. 8.

One survey of researchers in the nanotechnology field found found numerous complaints on the

[2] *See also* Goldberg, *supra*, at 3 (citing "vague or expansive terms" in patents as one of "three cross winds" creating a flood of patent litigation); David Segal, *Has Patent, Will Sue: An Alert to Corporate America*, New York Times, July 14, 2013, at BU1 ("But as long as the [patent] system exists, [noted patent assertor Erich] Spangenberg is going to exploit its ambiguities and pokiness for all it's worth."); James Bessen & Michael J. Meurer, *Patent Failure: How Judges, Bureaucrats, and Lawyers Put Innovators at Risk* 164 (2008) ("The evidence suggests . . . that the deterioration of the notice function might be the central factor fueling the growth in patent litigation").

usefulness of patents as technical disclosures. Lisa Larrimore Ouellette, *Do Patents Disclose Useful Information?*, 25 Harv. J.L. & Tech. 545 (2012). Among the surveyed researchers, 36% never read patents, many of them complaining about "the style in which patents are written—patents were called 'vague,' 'legal jargon,' 'incomprehensible,' and lacking 'technical detail.'" *Id.* at 571. Those who had read patents had similar complaints: "To a scientist," an academic chemist wrote, "the patent literature looks like an invention of lawyers for the benefit of other patent lawyers." *Id.* at 576. Only 38% of surveyed researchers believed that one could reproduce an invention from the patent specification—a clear indication that disclosure and dissemination of knowledge, the cornerstone goals of the patent system, are not being served. *Id.*

This unclarity in patent drafting has been specifically tied to Federal Circuit law. As one commentator observed, "the Federal Circuit has permitted a number of vague general disclosures that don't actually communicate very much to anyone, and patent lawyers often have incentives to write such vague disclosures." Mark A. Lemley, *The Myth of the Sole Inventor*, 110 Mich. L. Rev. 709, 745 (2012). Another has said on the increasing use of the "insolubly ambiguous" standard, "[i]f the Federal Circuit does not correct this trend soon, a competitor's ability to accurately determine the metes and bounds of current patents might deteriorate further." Christa J. Laser, *A Definite Claim On Claim Indefiniteness*, 10 Chi.-Kent J. Intell. Prop. 25, 27 (2010).

Indefiniteness of claims is a substantial offender within this general discontent over vagueness. The

Federal Circuit's "insolubly ambiguous" test holds claims to be definite even if the definition is "one over which reasonable persons will disagree." *Datamize, LLC*, 417 F.3d at 1437. One patent attorney bemoaned, "if reasonable people can disagree about the definition of the claim terms, how does this notify the public of the patentee's right to exclude?" Kirk M. Hartung, *Claim Construction: Another Matter of Chance and Confusion*, 88 J. Pat. & Trademark Off. Soc'y 831, 844 (2006). By validating claims whose meanings are up for debate, Federal Circuit's test contravenes the clarity of patent boundaries "essential to promote progress," *Festo Corp.*, 535 U.S. at 731, and undermines the public notice function that patent claims should serve.

Those outside of academic circles have expressed the most concern about the difficulty of understanding patents and particularly patent claims. One author, in describing how to read patent claims, laments that they are "a dense form of legal English," further explaining that the "drafting of patent claims is a black art" because claims are "full of magic words." Rob Weir, *How Not to Read a Patent* (Aug. 13, 2009), http://www.robweir.com/blog/2009/08/how-not-to-read-patent.html. "Patents are so vague," one attorney said, that "[i]f someone claims infringement, the only way to resolve it is through litigating." Rich Steeves, *New Report Examines the Economic Cost of Patent Trolls* (Oct. 11, 2013), http://www.insidecounsel.com/2013/10/11/new-report-examines-the-economic-cost-of-patent-tr. Where litigation is "the only way" to assess the meaning of a patent, that patent has failed to serve its public notice function.

These examples demonstrate that vagueness and

lack of clarity is a substantial problem for patent policy. By granting certiorari in this case and reviewing the standard for indefiniteness of claims, the Court can take a first step toward restoring the original intention of patents as disclosures of information that promote progress and innovation.

II. This Case Presents a Rare and Ideal Vehicle for Assessing the Standard of Indefiniteness

The Court should use the present case as the vehicle to review the Federal Circuit's standard for indefiniteness under § 112, ¶ 2, for two reasons. First, because the "insolubly ambiguous" test is practically impossible to meet, few cases challenging that test are brought on appeal, so the pool of opportunities for reviewing this error is diminishing rapidly. Second, the present case presents a clear and straightforward issue of law, not complicated by questions of fact, making it an ideal candidate for review.

A. The Current Rule on Indefiniteness Has Resulted in a Minuscule Pool of Cases on this Issue

The present case is likely to be the only appropriate opportunity for the Court to address the proper standard for indefiniteness under § 112, ¶ 2. This is because, due to the Federal Circuit's "insolubly ambiguous" test being overly strict, almost no cases presenting the issue of indefiniteness are presented on appeal.

Between 2010 and 2013, there were only thirteen published Federal Circuit decisions that considered

indefiniteness under § 112, ¶ 2.[3] Of those thirteen cases, the Federal Circuit found the claims definite in all but two cases: in *Haemonetics Corp. v. Baxter Healthcare Corp.* the court remanded the issue of indefiniteness to the district court due to a reversal of the underlying claim construction, 607 F.3d 776, 784 (Fed. Cir. 2010), and in *Teva Pharmaceuticals USA, Inc. v. Sandoz, Inc.* the court found some claims indefinite only because the applicant had actually made contradictory statements in the prosecution history, 723 F.3d 1363, 1369 (Fed. Cir. 2013). In the vast majority of cases, the Federal Circuit has rejected arguments of indefiniteness.[4]

Given the futility of arguing indefiniteness before the Federal Circuit, it is unsurprising that the

---

[3]There were additional cases that considered indefiniteness of means-plus-function claims under 35 U.S.C. § 112, ¶ 6 (2011), but those cases apply different law. Additionally, there were several cases involving typographical or drafting errors, making them unsuitable for certiorari. *See Funai Elec. Co. v. Daiwoo Elecs. Corp.*, 616 F.3d 1357 (Fed. Cir. 2010) (confusing grammar); *Rembrandt Data Techs., LP v. AOL, LLC*, 641 F.3d 1331 (Fed. Cir. 2011) (mixed apparatus/method); *CBT Flint Partners, LLC v. Return Path, Inc.*, 654 F.3d 1353 (Fed. Cir. 2011) (missing word "and" in claim); *HTC Corp. v. IPCom GmbH & Co., KG*, 667 F.3d 1270 (Fed. Cir. 2012) (mixed apparatus/method).

[4]*See Trading Techs. Int'l, Inc. v. eSpeed, Inc.*, 595 F.3d 1340 (Fed. Cir. 2010); *Honeywell Int'l, Inc. v. United States*, 596 F.3d 800 (Fed. Cir. 2010); *Enzo Biochem, Inc. v. Applera Corp.*, 599 F.3d 1325 (Fed. Cir. 2010); *Power-One, Inc. v. Artesyn Techs., Inc.*, 599 F.3d 1343 (Fed. Cir. 2010); *Hearing Components, Inc. v. Shure Inc.*, 600 F.3d 1357 (Fed. Cir. 2010); *Spansion, Inc. v. Int'l Trade Comm'n*, 629 F.3d 1331 (Fed. Cir. 2010); *Wellman, Inc. v. Eastman Chem. Co.*, 642 F.3d 1355 (Fed. Cir. 2011); *Star Scientific, Inc. v. R.J. Reynolds Tobacco Co.*, 655 F.3d 1364 (Fed. Cir. 2011); *IGT v. Bally Gaming Int'l, Inc.*, 659 F.3d 1109 (2011); *Deere & Co. v. Bush Hog, LLC*, 703 F.3d 1349 (Fed. Cir. 2012). The remaining case is the present one.

Figure 1: Published Federal Circuit opinions deciding indefiniteness under § 112 ¶ 2.

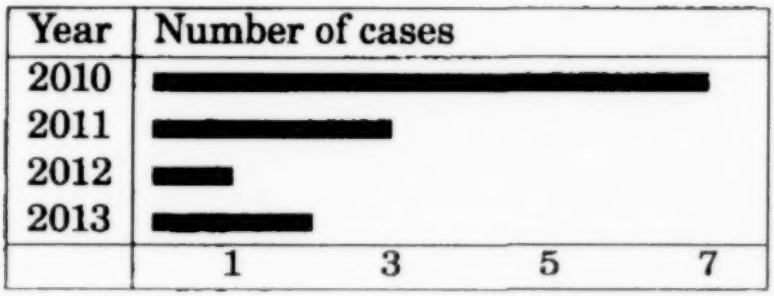

issue is being appealed less and less often. As shown in Figure 1, the number of cases considering indefiniteness has dropped precipitously between 2010 and today. Only three opinions on indefiniteness have issued since 2012. Of those three cases, two of them involved contradictory statements in the patent prosecution histories, making them unsuitable vehicles for evaluating the pure legal question of the "insolubly ambiguous" standard. *See Deere & Co. v. Bush Hog, LLC*, 703 F.3d 1349, 1359 (Fed. Cir. 2012); *Teva Pharmaceuticals USA, Inc.*, 723 F.3d at 1369. The third is the present case.

This small number of cases should not be taken to diminish the importance of this issue. As explained previously, the problem of vagueness and indefiniteness in patents is serious and widespread. The dearth of decisions on indefiniteness should rather be seen as an indication of the undue strictures of the Federal Circuit's "insolubly ambiguous" test, one that is so difficult to meet that it is, under the current law, fruitless to even argue on appeal.

The Federal Circuit's test for indefiniteness is thus

not only contrary to this Court's precedent, but also constructed to evade judicial review by this Court. Accordingly, the Court should accept this opportunity, which will likely not arise again, to correct this error.

B. The Claim Term in this Case Cleanly Presents the Issue of Indefiniteness

Unlike other indefiniteness cases that have reached this Court, this case cleanly and straightforwardly presents the important question of whether patent claims must be unambiguous when issued. In another recent indefiniteness case, this Court invited the views of the Solicitor General, who recommended against granting certiorari. *See* Brief for the United States as Amicus Curiae, *Applera Corp. v. Enzo Biochem, Inc.*, 131 S. Ct. 847 (2011) (No. 10-426) (Mem.). The Solicitor General noted that *Applera* was a poor vehicle for review because it raised complex factual issues and because "the court of appeals did not use either the phrase 'insolubly ambiguous' or the phrase 'capable of construction' in its opinion below." *Id.* at 15.

In contrast, the Federal Circuit's decision in this case expressly invoked and relied upon the "insolubly ambiguous" standard. *See Biosig Instruments, Inc. v. Nautilus, Inc.*, 715 F.3d 891, 898, 903 (Fed. Cir. 2013). Further, this case does not require the Court to engage in highly technical analysis. The disputed term—"spaced relationship"—is a term of degree. The District Court correctly concluded that the patent did not tell "anyone what precisely the space should be." *Id.* at 899 (citing the transcript of the summary judgment hearing). Even the Federal Circuit conceded that "that the specification of the '753 patent does not specifically define 'spaced relationship' with actual

parameters." *Id.* Quite simply, the patent provided no advance notice as to what "spaced relationship" meant.

If it grants certiorari, this Court's task will be simple. The Court should reject the Federal Circuit's "insolubly ambiguous" test and replace it with the correct standard: patent claims must allow a person of ordinary skill in the art to read and understand both what is claimed and what is not claimed. Applied to the facts of this case, this standard requires that the judgment of the Federal Circuit be reversed.

CONCLUSION

For the foregoing reasons, *amici* respectfully submit that the Court should grant certiorari.

Respectfully submitted,

CHARLES DUAN
PUBLIC KNOWLEDGE
1818 N St NW, Suite 410
Washington, DC 20036
(202) 861-0020
cduan@publicknowledge.org

DANIEL NAZER
Counsel of Record
JULIE P. SAMUELS
MICHAEL BARCLAY
ELECTRONIC FRONTIER FOUNDATION
815 Eddy Street
San Francisco, CA 94109
(415) 436-9333
daniel@eff.org

Counsel for Amici Curiae

JOINT APPENDIX

RECORD AND BRIEFS

No. 13-369

Supreme Court, U.S.
FILED
FEB 24 2014
OFFICE OF THE CLERK

IN THE

Supreme Court of the United States

NAUTILUS, INC.,

Petitioner,

v.

BIOSIG INSTRUMENTS, INC.,

Respondent.

On Writ Of Certiorari
To The United States Court Of Appeals
For The Federal Circuit

JOINT APPENDIX

JAMES E. GERINGER
JEFFREY S. LOVE
JOHN D. VANDENBERG
Counsel of Record
PHILIP WARRICK
KLARQUIST SPARKMAN, LLP
One World Trade Center
Suite 1600
121 S.W. Salmon Street
Portland, OR 97204
(503) 595-5300
john.vandenberg@klarquist.com

Counsel for Petitioner

MARK D. HARRIS
Counsel of Record
PROSKAUER ROSE LLP
11 Times Square
New York, NY 10036
(212) 969-3000
mharris@proskauer.com

STEVEN M. BAUER
PROSKAUER ROSE LLP
One International Place
Boston, MA 02110
(617) 526-9700

Counsel for Respondent

[Additional Counsel Listed on Inside Cover]

PETITION FOR WRIT OF CERTIORARI FILED
SEPTEMBER 21, 2013

CERTIORARI GRANTED JANUARY 10, 2014

Library of Congress
Law Library

THOMAS G. HUNGAR
MATTHEW D. MCGILL
JONATHAN C. BOND
GIBSON, DUNN & CRUTCHER LLP
1050 Connecticut Avenue, N.W.
Washington, D.C. 20036
(202) 955-8500

Counsel for Petitioner

SEAN M. HANDLER
KESSLER, TOPAZ, MELTZER & CHECK, LLP
280 King of Prussia Road
Radnor, PA 19087
(610) 667-7706

Counsel for Respondent

TABLE OF CONTENTS

Page

Relevant Docket Entries from the United States Court of Appeals for the Federal Circuit, No. 2012-1289 1

Relevant Docket Entries from the United States District Court for the Southern District of New York, No. 1:10-cv-07722-AKH 7

Complaint for Patent Infringement (S.D.N.Y. Oct. 8, 2010) 23

Excerpts from Transcript of Proceedings held on June 27, 2011 before Judge Alvin K. Hellerstein 33

U.S. Patent No. 5,337,753, Excerpt from Exhibit 3 to Brief In Support of Plaintiff's Claim Construction Position (S.D.N.Y. July 13, 2011) 40

Excerpts from U.S. Patent Application No. 07/895,936, from the prosecution history for U.S. Patent No. 5,337,753, Excerpt from Exhibit 3 to Brief In Support of Plaintiff's Claim Construction Position (S.D.N.Y. July 13, 2011) 68

Amendment, dated January 5, 1994, from the prosecution history for U.S. Patent No. 5,337,753, Excerpt from Exhibit 3 to Brief In Support of Plaintiff's Claim Construction Position (S.D.N.Y. July 13, 2011) 69

Excerpts from Notice of Allowability, dated January 19, 1994, from the prosecution history for U.S. Patent No. 5,337,753, Excerpt from Exhibit 3 to Brief In Support of Plaintiff's Claim Construction Position (S.D.N.Y. July 13, 2011) 74

Notice of Intent to Issue Ex Parte Reexamination Certificate, dated June 14, 2010, from the prosecution history for U.S. Patent Reexamination Control Nos. 90/010,366 and 90/010,612, Excerpt from Exhibit 3 to Brief In Support of Plaintiff's Claim Construction Position (S.D.N.Y. July 13, 2011) 78

Response to Office Action, dated March 31, 2010, from the prosecution history for U.S. Patent Reexamination Control Nos. 90/010,366 and 90/010,612, Excerpt from Exhibit 3 to Brief In Support of Plaintiff's Claim Construction Position (S.D.N.Y. July 13, 2011) 82

Response to Office Action, dated June 12, 2009, from the prosecution history for U.S. Patent Reexamination Control No. 90/010,366, Excerpt from Exhibit 3 to Brief In Support of Plaintiff's Claim Construction Position (S.D.N.Y. July 13, 2011) 97

Declaration of Gregory Lekhtman, dated June 12, 2009, from the prosecution history for U.S. Patent Reexamination Control No. 90/010,366, Excerpt from Exhibit 3 to Brief In Support of Plaintiff's Claim Construction Position (S.D.N.Y. July 13, 2011) 141

Exhibit 14 to Declaration of Gregory Lekhtman, dated June 12, 2009, from the prosecution history for U.S. Patent Reexamination Control No. 90/010,366, Excerpt from Exhibit 3 to Brief In Support of Plaintiff's Claim Construction Position (S.D.N.Y. July 13, 2011) 178

U.S. Patent No. 4,444,200, Excerpt from Exhibit 3 to Brief In Support of Plaintiff's Claim Construction Position (S.D.N.Y. July 13, 2011) 180

Ex Parte Reexamination Certificate (7853rd) for U.S. Patent No. 5,337,753, Excerpt from Exhibit 3 to Brief In Support of Plaintiff's Claim Construction Position (S.D.N.Y. July 13, 2011) 197

Report of Henrietta Galiana, Ph.D, dated September 19, 2008, Excerpt from Exhibit 3 to Brief In Support of Plaintiff's Claim Construction Position (S.D.N.Y. July 13, 2011) 201

Transcript of Proceedings held on August 11, 2011 before Judge Alvin K. Hellerstein 235

Excerpts from Declaration of George Yanulis, dated December 15, 2011 (S.D.N.Y. Dec. 15, 2011) 270

Nautilus Exhibit A, Entered at Oral Argument Proceedings held on February 22, 2012 before Judge Alvin K. Hellerstein.....280

Excerpts from Decision Denying Ex Parte Reexamination, dated February 17, 2012, from the prosecution history for U.S. Patent Reexamination Control No. 90/012,104, Excerpt from Exhibit 2 to Motion for Reconsideration (S.D.N.Y. Mar. 8, 2012).....285

Demonstrative Diagram, Excerpt from Brief for Appellant (Fed. Cir. Aug. 14, 2012).....288

The following documents have been omitted in printing this joint appendix because they appear on the following pages in the appendix to the petition for a writ of certiorari:

Order of the United States Court of Appeals for the Federal Circuit (June 28, 2013) 1a

Opinions of the United States Court of Appeals for the Federal Circuit (Apr. 26, 2013) 3a

Order of the United States District Court for the Southern District of New York (June 12, 2012) 33a

Judgment of the United States District Court for the Southern District of New York (Feb. 23, 2012) 36a

Summary Order of the United States District Court for the Southern District of New York (Feb. 13, 2012) 38a

Summary Order of the United States District Court for the Southern District of New York (Sept. 29, 2011) 40a

Transcript of Proceedings held on February 22, 2012 before Judge Alvin K. Hellerstein (S.D.N.Y.) 50a

General Docket
United States Court of Appeals
for the Federal Circuit

Court of Appeals Docket #: 12-1289 | **Docketed:** 03/26/2012

Nature of Suit: 830 Patent Infringement (Fed. Question) | **Termed:** 04/26/2013

Biosig Instruments, Inc. v. Nautilus, Inc.

Appeal From: United States District Court for the Southern District of New York

Fee Status: fee paid

Case Type Information:

1) Civil Private

2) -

3) -

Originating Court Information:

District: 0208-1 : 10-CV-7722

Trial Judge: Alvin K. Hellerstein, United States District Judge

Date Filed: 10/08/2010

Date NOA Filed:	**Date Rec'd COA:**
03/21/2012	03/21/2012

---

* * *

BIOSIG INSTRUMENTS, INC.,

Plaintiff-Appellant

v.

NAUTILUS, INC.,

Defendant-Appellee

03/26/2012	1	Appeal docketed. Received: 03/21/2012. [9278] Entry of Appearance due 04/09/2012. Certificate of Interest is due on 04/09/2012. Docketing Statement due 04/09/2012. Appellant/Petitioner's brief due 05/25/2012.
04/03/2012	3	Notice from Appellant Biosig Instruments, Inc. regarding postjudgment motions. Service: 04/02/2012 by US mail. [9656]

* * *

04/05/2012	4	ORDER deactivating appeal. Service: 04/05/2012 by clerk. [9657]

* * *

06/22/2012	19	ORDER reactivating case. Service: 06/22/2012 by clerk. [15484]

* * *

08/14/2012 24 BRIEF FILED for Appellant Biosig Instruments, Inc. [23]. Title: Corrected Opening Brief of Appellant Biosig Instruments, Inc. , [Non-Confidential version only]. Number of Pages: 71. Service: 08/14/2012 by email.. Pursuant to ECF-10, filer is directed to file six copies of the brief in paper format. The paper copies of the brief should be received by the court on or before 08/20/2012. [21296]

* * *

09/27/2012 27 BRIEF FILED for Appellee Nautilus, Inc. [26]. Title: Brief of Defendant-Appellee Nautilus, Inc., [Non-Confidential version only]. Number of Pages: 65. Service: 09/27/2012 by email.. Pursuant to ECF-10, filer is directed to file six copies of the brief in paper format. The paper copies of the brief should be received by the court on or before 10/03/2012. Appellant Biosig Instruments, Inc. reply brief due 10/15/2012. [27373]

* * *

10/15/2012 31 BRIEF FILED for Appellant Biosig Instruments, Inc. [30]. Title: Reply Brief of Appellant Biosig Instruments, Inc. , [Non-Confidential version only]. Number of Pages: 32. Service: 10/15/2012 by email.. Pursuant to ECF-10, filer is directed to file six copies of the brief in paper format. The paper copies of the brief should be received by the court on or before 10/22/2012. Appendix due 10/25/2012. [30061]

* * *

10/22/2012 35 APPENDIX FILED for Biosig Instruments, Inc. [34], [33]. Title: Joint Appendix (Five Volumes), [Non-Confidential version only]. Number of Pages: 1000. Service: 10/22/2012 by email.. Pursuant to ECF-10, filer is directed to file six copies of the brief in paper format. The paper copies of the brief should be received by the court on or before 10/29/2012. [31336]

* * *

01/10/2013 42 Submitted after ORAL ARGUMENT by Mr. Michael J. Bonella for Biosig Instruments, Inc. and James E. Geringer for Nautilus, Inc.. Panel: Newman, Schall and Wallach. [42280]

04/26/2013	43	OPINION and JUDGMENT filed. The judgment or decision is: Reversed and Remanded. (Precedential Opinion). (For the Court: Newman, Circuit Judge; Schall, Circuit Judge and Wallach, Circuit Judge). Concurring opinion filed by Circuit Judge Schall. [71911]

* * *

05/28/2013	46	Petition for en banc rehearing filed by Appellee Nautilus, Inc.. Service: 05/28/2013 by email, US mail. [81542]
06/28/2013	47	ORDER denying [46] petition for en banc rehearing filed by Nautilus, Inc. The mandate will issue on 07/05/2013. Service: 06/28/2013 by clerk. [88840]
06/28/2013	48	MOTION of Appellee Nautilus, Inc. to stay execution of the mandate until Filing and Disposition of a Timely Petition for a Writ of Certiorari with the United States Supreme Court [Consent: opposed]. Service: 06/28/2013 by email, US mail. [88898]
07/03/2013	49	RESPONSE of Appellant Biosig Instruments, Inc. to the motion to stay mandate [48] filed by Appellee Nautilus, Inc. in 12-1289. Service: 07/03/2013 by email, US mail. [89648]

07/05/2013 50 REPLY of Appellee Nautilus, Inc. to response filed by Appellant in 12-1289 , Doc. No [49]. Service: 07/05/2013 by email, US mail. [89965]

* * *

09/30/2013 52 ORDER filed granting Entry of Appearance of Daniel C. Mulveny; denying [48] motion to stay mandate filed by Nautilus, Inc.. By: Merits Panel (Per Curiam). Service: 09/30/2013 by clerk. [106983]

09/30/2013 53 Mandate issued to the United States District Court for the Southern District of New York. Service: 09/30/2013 by clerk. [106989]

* * *

U.S. District Court
Southern District of New York (Foley Square)
CIVIL DOCKET FOR
CASE #: 1:10-cv-07722-AKH

Biosig Instruments, Inc. v. Nautilus, Inc.

Assigned to: Judge Alvin K. Hellerstein

Similar Case: 1:04-cv-06654-AKH

Cause: 35:183 Patent Infringement

Date Filed: 10/08/2010

Jury Demand: Both

Nature of Suit: 830 Patent

Jurisdiction: Federal Question

* * *

Date Filed	#	Docket Text
10/08/2010	1	COMPLAINT against Nautilus, Inc.. (Filing Fee $ 350.00, Receipt Number 917098)Document filed by Biosig Instruments, Inc..(rdz) (ama). (Entered: 10/12/2010)
		* * *
01/03/2011	5	ANSWER to Complaint with JURY DEMAND., COUNTERCLAIM against Biosig Instruments, Inc.. Document filed by Nautilus, Inc..(Geringer, James) (Entered: 01/03/2011)
		* * *

01/24/2011	13	RESPONSE *to Defendant Nautilus, Inc.'s Counterclaims*. Document filed by Biosig Instruments, Inc.. (Zimmerman, Scott) (Entered: 01/24/2011)
		* * *
03/11/2011		Minute Entry for proceedings held before Judge Alvin K. Hellerstein: Status Conference held on 3/11/2011. Next Status Conference set for 6/17/2011 at 10:00 AM before Judge Alvin K. Hellerstein. (mro) (Entered: 03/14/2011)
		* * *
07/13/2011	18	JOINT CLAIM CONSTRUCTION STATEMENT. Document filed by Biosig Instruments, Inc., Nautilus, Inc.. (Attachments: # 1 Exhibit Joint Claim Construction Chart)(Bone, John) (Entered: 07/13/2011)
07/13/2011	19	BRIEF *In Support of Plaintiff's Claim Construction Position*. Document filed by Biosig Instruments, Inc.. (Attachments: # 1 Exhibit Joint Construction Chart, # 2 Exhibit Plaintiff's June 27, 2011 Hearing Presentation, # 3 Exhibit Joint Appendix (filed separately due to file size), # 4 Exhibit June 27, 2011 Hearing Transcript, # 5 Exhibit Dictionary Excerpt)(Bone, John) (Entered: 07/13/2011)

07/13/2011	20	BRIEF *Defendant Nautilus, Inc.'s Opening Claim Construction Brief*. Document filed by Nautilus, Inc..(Geringer, James) (Entered: 07/13/2011)
		* * *
07/20/2011	22	CLAIM CONSTRUCTION STATEMENT. Document filed by Biosig Instruments, Inc..(Zimmerman, Scott) (Entered: 07/20/2011)
07/20/2011	23	REPLY re: 20 Brief *Claim Construction*. Document filed by Nautilus, Inc.. (Geringer, James) (Entered: 07/20/2011)
07/22/2011	24	REPLY re: 21 Remark *Abbreviated Joint Appendix*. Document filed by Nautilus, Inc.. (Attachments: # 1 Appendix 1b)(Geringer, James) (Entered: 07/22/2011)
		* * *
08/11/2011		Minute Entry for proceedings held before Judge Alvin K. Hellerstein: Status Conference held on 8/11/2011. (mro) (Entered: 09/13/2011)
08/17/2011	29	JOINT REPLY re: 19 Brief, *Joint Letter To Court Re Claim Construction Issue*. Document filed by Nautilus, Inc.. (Geringer, James) (Entered: 08/17/2011)

08/19/2011	30	TRANSCRIPT of Proceedings re: Conference held on 6/27/2011 before Judge Alvin K. Hellerstein. Court Reporter/Transcriber: Jennifer Thun, (212) 805-0300. Transcript may be viewed at the court public terminal or purchased through the Court Reporter/Transcriber before the deadline for Release of Transcript Restriction. After that date it may be obtained through PACER. Redaction Request due 9/12/2011. Redacted Transcript Deadline set for 9/22/2011. Release of Transcript Restriction set for 11/21/2011. (McGuirk, Kelly) (Entered: 08/19/2011)

* * *

09/29/2011	32	ORDER SUMMARY ORDER MEMORIALIZING COURT'S PATENT CLAIM TERM CONSTRUCTIONS AFTER A MARKMAN HEARING: Having considered the parties' written briefs and heard oral argument, I construe the '753 Patent's claim terms as indicated on the record, memorialized in the chart appended to this order. If the parties wish to file dispositive motions in response to my rulings, such motions shall be filed no later than November 10, 2011; opposition papers shall be filed no later than December 1, 2011; reply papers, if any, shall be filed no later than December 8, 2011. (Motions due by 11/10/2011, Responses due by 12/1/2011, Replies due by 12/8/2011.) (Signed by Judge Alvin K. Hellerstein on 9/28/2011) (pl) Modified on 9/29/2011 (pl). Modified on 9/29/2011 (pl). (Entered: 09/29/2011)

10/04/2011	33	TRANSCRIPT of Proceedings re: HEARING held on 8/11/2011 before Judge Alvin K. Hellerstein. Court Reporter/Transcriber: Sonya Ketter Huggins, (212) 805-0300. Transcript may be viewed at the court public terminal or purchased through the Court Reporter/Transcriber before the deadline for Release of Transcript Restriction. After that date it may be obtained through PACER. Redaction Request due 10/28/2011. Redacted Transcript Deadline set for 11/7/2011. Release of Transcript Restriction set for 1/5/2012.Filed In Associated Cases: 1:10-cv-07722-AKH, 1:04-cv-06654-AKH(McGuirk, Kelly) (Entered: 10/04/2011)

* * *

10/11/2011	35	MOTION Clarification *of Markman Order*. Document filed by Nautilus, Inc.. Return Date set for 11/2/2011 at 10:00 AM.(Sivin, Joshua) (Entered: 10/11/2011)
10/11/2011	36	MEMORANDUM OF LAW in Support re: 35 MOTION Clarification *of Markman Order*.. Document filed by Nautilus, Inc.. (Sivin, Joshua) (Entered: 10/11/2011)

10/11/2011	37	AFFIDAVIT of Joshua Sivin, Esq. in Support re: 35 MOTION Clarification *of Markman Order*.. Document filed by Nautilus, Inc.. (Attachments: # 1 Exhibit A, # 2 Exhibit B)(Sivin, Joshua) (Entered: 10/11/2011)
10/24/2011	38	MEMO ENDORSEMENT on MEMORANDUM OF LAW IN SUPPORT OF DEFENDANT'S MOTION FOR CLARIFICATION OF THE COURT'S MARKMAN ORDER. ENDORSEMENT: This motion for clarification is misstyled. My Markman order does not require clarification, for its ruling is clear. Plaintiff's motion is re-styled a motion for re-hearing. The motion is denied. The file wrapper is ambiguous. See, e.g. Paragraphs 79 and 69. JA 241, 239. Denying 35 Motion. (Signed by Judge Alvin K. Hellerstein on 10/24/11) (rjm) (Entered: 10/24/2011)
11/10/2011	39	MOTION for Summary Judgment. Document filed by Nautilus, Inc.. Responses due by 12/1/2011 Return Date set for 12/12/2011 at 10:00 AM.(Geringer, James) (Entered: 11/10/2011)

11/10/2011	40	MEMORANDUM OF LAW in Support re: 39 MOTION for Summary Judgment.. Document filed by Nautilus, Inc.. (Attachments: # 1 Exhibit A)(Geringer, James) (Entered: 11/10/2011)
11/10/2011	41	DECLARATION of Mark A. Porter in Support re: 39 MOTION for Summary Judgment.. Document filed by Nautilus, Inc.. (Geringer, James) (Entered: 11/10/2011)
11/10/2011	42	DECLARATION of Catherine Kuehn in Support re: 39 MOTION for Summary Judgment.. Document filed by Nautilus, Inc.. (Geringer, James) (Entered: 11/10/2011)
11/23/2011	43	MEMORANDUM OF LAW in Support re: 39 MOTION for Summary Judgment. *(Corrected)*. Document filed by Nautilus, Inc.. (Attachments: # 1 Exhibit A)(Geringer, James) (Entered: 11/23/2011)
		* * *
12/15/2011	47	MEMORANDUM OF LAW in Opposition re: 39 MOTION for Summary Judgment. *REDACTED FOR PUBLIC VIEWING*. Document filed by Biosig Instruments, Inc.. (Attachments: # 1 Annex)(Bonella, Michael) (Entered: 12/15/2011)

12/15/2011	48	DECLARATION of Michael J. Bonella in Opposition re: 39 MOTION for Summary Judgment.. Document filed by Biosig Instruments, Inc.. (Attachments: # 1 Exhibit A, # 2 Exhibit B, # 3 Exhibit C, # 4 Exhibit D, # 5 Exhibit E, # 6 Exhibit F, # 7 Exhibit G, # 8 Exhibit H)(Bonella, Michael) (Entered: 12/15/2011)
12/15/2011	49	DECLARATION of Dr. George Yanulis in Opposition re: 39 MOTION for Summary Judgment.. Document filed by Biosig Instruments, Inc.. (Attachments: # 1 Exhibit A, # 2 Exhibit B, # 3 Exhibit C, # 4 Exhibit D, # 5 Exhibit E, # 6 Exhibit F, # 7 Exhibit G)(Bonella, Michael) (Entered: 12/15/2011)

* * *

12/29/2011	51	REPLY MEMORANDUM OF LAW in Support re: 39 MOTION for Summary Judgment.. Document filed by Nautilus, Inc.. (Geringer, James) (Entered: 12/29/2011)

* * *

02/22/2012		Minute Entry for proceedings held before Judge Alvin K. Hellerstein: Oral Argument held on 2/22/2012 re: 39 MOTION for Summary Judgment filed by Nautilus, Inc. Motion granted and case closed. (cd) (Entered: 02/29/2012)
02/23/2012	54	SUMMARY ORDER: granting 39 Motion for Summary Judgment. On February 22, 2012, oral argument was heard on Defendant's motion for summary judgment. For the reasons stated on the record, Defendant's motion is granted. Plaintiff's complaint is dismissed with prejudice. Defendant's counterclaims are dismissed on consent without prejudice. The clerk shall enter judgment in favor of Defendant and mark the motion (Doc. No. 39) terminated and the case closed.(Signed by Judge Alvin K. Hellerstein on 2/23/2012) (djc) (Entered: 02/23/2012)

* * *

02/23/2012	55	JUDGMENT That for the reasons stated in the Court's Summary Order dated February 23, 2012, Defendants motion for summary judgment is granted; the complaint is dismissed with prejudice and Defendants counterclaim are dismissed on consent without prejudice; accordingly, the case is closed. (Signed by Judge Alvin K. Hellerstein on 2/23/2012) (Attachments: # 1 Notice of Right to Appeal)(jnm) (Entered: 02/23/2012)

* * *

03/05/2012	58	TRANSCRIPT of Proceedings re: Argument held on 2/22/2012 before Judge Alvin K. Hellerstein. Court Reporter/Transcriber: Martha Drevis, (212) 805-0300. Transcript may be viewed at the court public terminal or purchased through the Court Reporter/Transcriber before the deadline for Release of Transcript Restriction. After that date it may be obtained through PACER. Redaction Request due 3/29/2012. Redacted Transcript Deadline set for 4/9/2012. Release of Transcript Restriction set for 6/7/2012.Filed In Associated Cases: 1:10-cv-07722-AKH, 1:04-cv-06654-AKH(McGuirk, Kelly) (Entered: 03/05/2012)

* * *

03/08/2012	60	MOTION for Reconsideration. Document filed by Biosig Instruments, Inc.. (Attachments: # 1 Exhibit Biosig Exhibit 1 - 1 of 7, # 2 Exhibit Biosig Exhibit 1 - 2 of 7, # 3 Exhibit Biosig Exhibit 1 - 3 of 7, # 4 Exhibit Biosig Exhibit 1 - 4 of 7, # 5 Exhibit Biosig Exhibit 1 - 5 of 7, # 6 Exhibit Biosig Exhibit 1 - 6 of 7, # 7 Exhibit Biosig Exhibit 1 - 7 of 7, # 8 Exhibit Biosig Exhibit 2)(Zimmerman, Scott) (Entered: 03/08/2012)
03/08/2012	61	MEMORANDUM OF LAW in Support re: 60 MOTION for Reconsideration.. Document filed by Biosig Instruments, Inc.. (Zimmerman, Scott) (Entered: 03/08/2012)
03/21/2012	62	NOTICE OF APPEAL TO THE FEDERAL CIRCUIT from 55 Judgment, 54 Order on Motion for Summary Judgment,, 32 Order, Set Deadlines,,,,,,,. Form 7 and Form 22 are due within 14 days. Document filed by Biosig Instruments, Inc.. Filing fee $ 455.00, receipt number 0208-7304887. (Zimmerman, Scott) (Entered: 03/21/2012)

* * *

03/22/2012	63	RESPONSE in Opposition re: 60 MOTION for Reconsideration.. Document filed by Nautilus, Inc.. (Geringer, James) (Entered: 03/22/2012)

03/23/2012	64	REPLY MEMORANDUM OF LAW in Support re: 60 MOTION for Reconsideration.. Document filed by Biosig Instruments, Inc.. (Zimmerman, Scott) (Entered: 03/23/2012)

* * *

04/11/2012	67	ORDER of USCA FOR THE FEDERAL CIRCUIT (Certified Copy) as to 62 Notice of Appeal to the Federal Circuit, filed by Biosig Instruments, Inc. USCA Case Number 2012-1289. On consideration of the notice of appeal filed on March 21, 2012, a motion of the type enumerated in Fed. R. App. P. 4(a)(4) has been filed in the U.S. District Court for the Southern District of New York rendering the notice of appeal ineffective, it is ORDERED that the appeal be, and it hereby is DEACTIVATED. The appeal will be reactivated upon entry of the order disposing of the last such outstanding motion. Jan Horbaly, Clerk USCA for the Federal Circuit. Issued As Order: 4/5/2012. (nd) (Entered: 04/11/2012)

06/12/2012	68	ORDER granting 60 Motion for Reconsideration. Upon reconsideration, however, I reaffirm my decision to grant Defendant's Motion for Summary Judgment. I granted Defendant's Motion for Summary judgment because I found that Claim 1 ofthe '753 Patent failed to satisfy the definiteness requirement of 35 U.S.C. § 112. Specifically, I found that the claim term "spaced relationship" was impermissibly indefinite. Reviewing the Denial of Reexamination, I find nothing that merits altering this finding. Nothing in the Denial of Reexamination imbues "spaced relationship" with sufficient definiteness. The Clerk shall mark the motion (Doc. No. 60) terminated. SO ORDERED.(Signed by Judge Alvin K. Hellerstein on 6/12/2012) (ama) (Entered: 06/12/2012)
07/02/2012	69	ORDER of USCA FOR THE FEDERAL CIRCUIT (Certified Copy) as to 62 Notice of Appeal to the Federal Circuit, filed by Biosig Instruments, Inc. USCA Case Number 12-1289. IT IS HEREBY ORDERED that the appeal appeal is REACTIVATED effective June 22, 2012. The appellant's brief is due on August 13, 2012. Jan Horbaly, Clerk USCA for the Federal Circuit. Certified: 6/22/2012. (nd) (Entered: 07/05/2012)

04/26/2013	70	OPINION of USCA for the Federal Circuit as to 62 Notice of Appeal to the Federal Circuit, filed by Biosig Instruments, Inc. USCA Case Number 12-1289. The only issue on this appeal is the summary judgment of indefiniteness. Other aspects of the defense of patent invalidity, although raised in the District Court, are not before us, and may be considered on remand. We reverse the District Court's invalidity determination and remand for further proceedings. REVERSED AND REMANDED. Jan Horbaly, Clerk USCA for the Federal Circuit. Certified: 04/26/2013. (nd) (Entered: 04/26/2013)
09/30/2013	71	MANDATE of USCA FOR THE FEDERAL CIRCUIT(Certified Copy) as to 62 Notice of Appeal to the Federal Circuit, filed by Biosig Instruments, Inc.; USCA Case Number 12-1289. In accordance with the judgment of this Court, entered on April 26, 2013, and pursuant to Rule 41(a) of the Federal Rules of Appellate Procedures, the formal mandate is hereby issued. Jan Horbaly, Clerk USCA for the Federal Circuit. Issued As Mandate: 09/30/2013. (nd) (Entered: 09/30/2013)

09/30/2013		Transmission of USCA Mandate to the District Judge re: 71 USCA Mandate,. (nd) (Entered: 09/30/2013)

* * *

01/10/2014		Minute Entry for proceedings held before Judge Alvin K. Hellerstein: Status Conference held on 1/10/2014, (Status Conference set for 2/20/2014 at 02:30 PM in Courtroom 14D, 500 Pearl Street, New York, NY 10007 before Judge Alvin K. Hellerstein.). (Jones, Brigitte) (Entered: 01/10/2014)

* * *

01/30/2014	78	MEMO ENDORSEMENT on re: 77 Letter filed by Biosig Instruments, Inc. ENDORSEMENT: In view of the grant of certiorari by the U.S. Supreme Court, and the absence of consensus for mediation at the status conference is canceled. The parties shall advise me as to the status of the Mandate of the Court of Appeals. (Signed by Judge Alvin K. Hellerstein on 1/28/2014) (mro) (Entered: 01/30/2014)

United States District Court
for the Southern District of New York

Biosig Instruments, Inc. **Plaintiff,** **v.** **Nautilus, Inc.** **Defendant.**	**JURY TRIAL DEMANDED** **10 CV 7722**

Biosig Instruments, Inc.'s Complaint for Patent Infringement v. Nautilus, Inc.

1. This is the second action in this Court involving the same parties and the same subject matter.

2. In August 2004, Plaintiff Biosig Instruments, Inc. ("Biosig") brought an action in the United States District Court for the Southern District of New York against the Nautilus Group, Inc., now Nautilus, Inc., *(Biosig Instruments, Inc. v. The Nautilus Group, Inc.*, 04-cv-06654-AKH (S.D.NY) ("the First Nautilus Litigation") for infringement of U.S. Patent No. 5,337,753 ("'753 Patent"). A true and correct copy of the '753 Patent is attached as Exhibit 1.

3. During the First Nautilus Litigation, Nautilus, Inc. twice requested that the United States Patent and Trademark Office ("Patent Office") reexamine the '753 Patent. The Patent Office granted both of Nautilus, Inc.'s reexamination requests.

4. In March 2009, the Court dismissed the First Nautilus Litigation without prejudice pursuant to a

Stipulation of Voluntary Dismissal in light of the reexamination proceedings (Stipulation Of Dismissal, No. 04-cv-06654 (AKH) (S.D.N.Y. March 26, 2009) Dkt. 72).

5. In June 2010, the Patent Office confirmed the patentability of all claims of the '753 Patent without amendment.

6. Biosig brings this action in this Court seeking relief for Nautilus, Inc.'s continued infringement of Biosig's '753 Patent.

The Parties

7. Plaintiff Biosig is a corporation duly incorporated under the laws of Canada and has its headquarters at 440-19th Avenue, Suite 1000, Lachine, Quebec, Canada.

8. Biosig is in the business of, among other things, designing, manufacturing, and selling exercise equipment and electronics and components for exercise equipment.

9. Defendant Nautilus, Inc. ("Nautilus") is a corporation duly incorporated under the laws of the state of Washington, and its corporate headquarters are located at 16400 SE Nautilus Drive, Vancouver, Washington, 98683.

10. Defendant Nautilus, Inc. was formerly named "The Nautilus Group, Inc" and "Direct Focus, Inc." Nautilus changed its name from "The Nautilus Group, Inc." to "Nautilus, Inc." in about March 2005. Nautilus changed its name from "Direct Focus, Inc." to "The Nautilus Group, Inc." in about May 2002. Nautilus previously acquired the StairMaster brand and assets.

11. Nautilus has distributed, manufactured, used, offered for sale, imported, promoted, marketed, and sold exercise equipment in the United States under various tradenames including "Nautilus," "Schwinn," "Bowflex," and "StairMaster."

Jurisdiction & Venue

12. This action arises under the patent laws of the United States, 35 U.S.C. § 101 et seq., and this Court has subject matter jurisdiction over this action under 28 U.S.C. §§ 1331 and 1338(a).

13. This Court has personal jurisdiction over Nautilus because Nautilus resides and conducts business within this judicial district and/or because Nautilus has committed acts that infringe Biosig's '753 Patent in this judicial district, such as selling infringing exercise equipment. Nautilus did not contest personal jurisdiction in the First Nautilus Litigation (The Nautilus Group, Inc.'s Answer, No. 04-cv-06654 (AKH) (S.D.N.Y. January 4, 2005) Dkt. 8).

14. Venue is proper in this Court under 28 U.S.C. §§ 1391(b) and (c) and § 1400(b). Nautilus previously admitted that venue is proper in this Court (The Nautilus Group, Inc.'s Answer at ¶ 6, No. 04-cv-06654 (AKH) (S.D.N.Y. January 4, 2005) Dkt. 8).

Factual Background

15. Gregory Lekhtman is the sole inventor of the "'753 Patent" (Ex. 1). The '753 Patent claims, *inter alia,* exercise equipment having a heart rate monitor comprising certain features for determining the heart rate of a user while exercising. The heart rate monitor disclosed in the '753 Patent reduces the effects of muscle artifacts in the detection of a user's heart rate while the user is exercising.

16. Gregory Lekhtman is Biosig's president.

17. The '753 Patent issued in 1994, and Biosig is the sole and exclusive owner of the '753 Patent. Pursuant to an Assignment in July 1992, Mr. Lekhtman assigned all right, title, and interest to the '753 Patent to Biosig.

18. Nautilus has been aware of and had actual knowledge of Biosig's '753 Patent since at least 2003, and its predecessors in interest had been aware of Biosig's '753 Patent since the 1990's. Biosig disclosed the patented technology claimed in the '753 Patent to StairMaster Sports Medical Products, Inc. ("StairMaster") in the 1990's. StairMaster did not purchase Biosig's technology from Biosig and instead distributed, manufactured, used, offered for sale, imported, promoted, marketed, and sold exercise equipment that infringes upon Biosig's '753 Patent. Nautilus has continued to infringe after its acquisition of the StairMaster brands.

19. Despite actual knowledge of Biosig's '753 Patent, Nautilus never obtained a license to use the technology claimed in Biosig's '753 Patent. Rather, Nautilus has infringed Biosig's '753 Patent by distributing, manufacturing, using, offering for sale, importing, promoting, marketing, and selling exercise equipment that includes the technology claimed in '753 Patent. Nautilus's infringement has been objectively reckless and Nautilus has infringed Biosig's patent rights despite an objectively high likelihood that its actions constituted infringement and actual knowledge that Biosig's '753 Patent was valid.

20. In August 2004, Biosig brought the First Nautilus Litigation seeking relief for Nautilus' infringement of Biosig's 753 Patent.

21. In the First Nautilus Litigation, Nautilus alleged that the '753 Patent was invalid.

22. On December 19, 2008, while the First Nautilus Litigation was pending, Nautilus requested that the Patent Office reexamine Biosig's '753 Patent pursuant to 37 C.F.R. § 1.510 ("Nautilus' First Reexamination Request"). In Nautilus' First Reexamination Request, Nautilus alleged that the '753 Patent claims were unpatentable in view of certain references.

23. On February 5, 2009, the Patent Office granted Nautilus' First Reexamination Request, and it was assigned Control No. 90/010,366 (the "'366 Reexamination").

24. On July 17, 2009, Nautilus filed a second request with the Patent Office asking that the Patent Office reexamine Biosig's '753 Patent in view of certain other references or allegations ("Nautilus' Second Reexamination Request"). In Nautilus' Second Reexamination Request, Nautilus alleged that the '753 Patent claims were unpatentable.

25. On September 30, 2009, the Patent Office granted Nautilus' Second Reexamination Request, and it was assigned Control No. 90/010,612 (the "'612 Reexamination").

26. On December 14, 2009, the Patent Office merged the '366 and '612 Reexaminations into one proceeding.

27. On February 23, 2009, Biosig and Nautilus submitted a joint motion to this Court to stay the First Nautilus Litigation pending the Reexamination proceedings.

28. On February 24, 2009, the Court denied the Parties' joint motion to stay the First Nautilus Litigation but directed the parties to consider agreeing to a stipulated dismissal without prejudice and a tolling agreement negating any estoppels.

29. In March 2009, Biosig and Nautilus filed a Stipulation of Dismissal with a tolling agreement in the First Nautilus Litigation.

30. On March 25, 2009, the Court ordered the First Nautilus Litigation dismissed without prejudice and closed the case (Stipulation Of Dismissal, No. 04-cv-06654 (AKH) (S.D.N.Y. March 26, 2009), D.I. 72).

31. On June 14, 2010, the Patent Office confirmed the patentability of all of Biosig's '753 Patent claims in both the '366 and the '612 Reexamination proceedings without any amendment to any of the claims and issued a notice of intent to issue a Reexamination Certificate.

32. Nautilus has had actual knowledge that the Patent Office confirmed the patentability of all of Biosig's '753 Patent claims since June 2010.

33. Since June 2010, Nautilus has continued to willfully infringe Biosig's '753 Patent. For example, Nautilus has continued to distribute, manufacture, use, offer for sale, import, promote, market, and sell its infringing exercise equipment in the United States including its Nautilus Elliptical E514, Nautilus U514 Upright Bike, the StairMaster SC916 Stepper, the Schwinn 860 Treadmill, and the Schwinn 840 Treadmill despite the fact that the United States Patent and Trademark Office disagreed with Nautilus' invalidity allegations. Nautilus continues to infringe Biosig's patent rights despite

an objectively high likelihood that its actions constitute infringement and that Biosig's '753 Patent is valid particularly in view of the reexamination proceedings.

Count I (Infringement of U.S. Patent No. 5,337,753)

34. Biosig reallages and incorporates by reference, as if fully set forth herein, ¶¶1-33 of this Complaint.

35. The '753 Patent is entitled "Heart Rate Monitor" and was duly and legally issued by the Patent Office on August 16, 1994. (Ex. 1.)

36. Mr. Lekhtman is the sole inventor of the '753 Patent.

37. By virtue of an assignment from Mr. Lekhtman, Biosig is the sole and exclusive owner of the '753 Patent.

38. Nautilus has infringed and continues to infringe claims 1 and 11 of Biosig's '753 Patent under 35 U.S.C. § 271 et seq. both literally and under the doctrine of equivalents. For example, Nautilus has infringed and continues to infringe claims 1 and 11 of Biosig's '753 Patent under 35 U.S.C. § 271(a) by, *inter alia,* its manufacture, use, offer for sale, importation, and sale of devices that fall within claims 1 and 11 of Biosig's '753 Patent, including but not limited to, the Nautilus Elliptical Trainer E514, Nautilus U514 Upright Exercise Bike, Nautilus Elliptical Trainer E916, Nautilus U916 Upright Exercise Bike, Nautilus NE2000 Elliptical Trainer, StairMaster SC916 Stepper, StairMaster FreeClimber 4600PT Exercise System, Schwinn 860 Treadmill, Schwinn 840 Treadmill, Schwinn 418 Elliptical Trainer, Schwinn 430 Elliptical Trainer, Schwinn 112 Up-

right Exercise Bike, Schwinn 101 Upright Bike, and Schwinn 103 Upright Bike (collectively the "Infringing Products"). The Nautilus' Infringing Products provided above are exemplary as Nautilus has distributed, manufactured, used, offered for sale, imported, promoted, marketed, and sold many versions of its exercise equipment products under different marketing labels.

39. Nautilus has actively induced the infringement and contributed to the direct infringement of claims 1 and 11 of Biosig's '753 Patent by others under 35 U.S.C. § 271 (b) and (c) by, *inter alia*, distributing, manufacturing, using, offering for sale, importing, promoting, and selling Infringing Products that include a "heart rate monitor" and exercise apparatuses as claimed in Biosig's 753 Patent. Nautilus' inducement and contributory infringement has caused consumers to use Nautilus' devices to directly infringe the '753 Patent by using the Infringing Products.

40. Nautilus' infringement of Biosig's 753 Patent has been done with actual knowledge of the '753 Patent and has been and is willful.

41. Biosig has been damaged by Nautilus' infringement, and Nautilus is liable for damages to Biosig under 35 U.S.C. § 284.

42. Biosig has been damaged by Nautilus' infringement of Biosig's '753 Patent and should be awarded its costs and pre and post judgment interest.

43. This is an exceptional case under 35 U.S.C. § 285, and Biosig should be awarded its costs and attorneys' fees.

44. Biosig has complied with the notice requirements of 35 U.S.C. § 287.

45. Biosig specifically demands a trial by jury.

PRAYER FOR RELIEF:

WHEREFORE, Biosig respectfully requests that this Court enter judgment in its favor and against Nautilus and grant Biosig the following relief:

1. A judgment declaring that Nautilus has infringed Biosig's '753 Patent under 35 U.S.C. § 271.

2. A judgment that Nautilus' infringement has been willful and that this case is exceptional under 35 U.S.C. § 285.

3. An order, awarding Biosig the damages it has suffered because of Nautilus's infringement in an amount determined at trial.

4. An order, awarding Biosig prejudgment and post judgment interest on its damages award in an amount to be determined.

5. An order, awarding Biosig treble damages for Nautilus' willful infringement with interest.

6. An order, awarding Biosig its costs and its attorney's fees.

7. An order, awarding Biosig such other relief as the Court finds just and proper.

Dated: New York, New York
October 8, 2010

/s

Scott Zimmerman (SZ2735)
John Bone (JB8342)
Seidell, Pittoni, Murphy & Bach LLP
99 Park Avenue
New York, NY 10016
(212) 286 - 8585
(212) 490 - 8966 Fax
Attorneys for Plaintiff
Biosig Instruments, Inc.

Paul Milcetic
Michael Bonella
Barroway Topaz Kessler Meltzer & Check, LLP
280 King of Prussia Road
Radnor, PA. 19087
Tel. No.: (610) 667-7706
Fax No.: (610) 667-7056
Attorneys for Plaintiff
Biosig Instruments, Inc.
Pro Hac Vice to be filed

To: Nautilus, Inc.
16400 SE Nautilus Drive
Vancouver, Washington 98683

UNITED STATES DISTRICT COURT
SOUTHERN DISTRICT OF NEW YORK
----------x

BIOSIG INSTRUMENTS, INC.,

Plaintiff

v. 10 CV 7722(AKH)

NAUTILUS, INC.,

Defendant.
----------x

New York, N.Y.
June 27, 2011
3:00 p.m.

Before:

HON. ALVIN K. HELLERSTEIN,

District Judge

APPEARANCES

BARROWAY TAPAZ
Attorneys for Plaintiff
BY: PAUL MILCETIC

HPM& B
Attorneys for Plaintiff
BY: JOHN H. BONE

KLARQUIST SPARKMAN, LLP
Attorneys for Defendant
BY: JAMES GERINGER

JOHNSON GALLAGHER MAGLIERY, LLC
Attorneys for Defendant
BY: JOSHUA M. SIVIN

[2] (In open court; case called)

THE DEPUTY CLERK: Counsel, state your appearances for the record.

MR. MILCETIC: Paul Milcetic of Barroway Topaz on behalf of the plaintiff Biosig.

MR. BONE: John Bone on behalf of Biosig.

THE COURT: Who is going to be speaking?

MR. MILCETIC: Paul Milcetic, your Honor.

MR. GERINGER: Jim Geringer from Klarquest Sparkman for Nautilus, your Honor. I will be speaking.

MR. SIVIN: Joshua M. Sivin from Johnson Gallagher Magliery for Nautilus, your Honor.

THE COURT: So I asked for this as a tutorial to help prepare me for a Markman hearing that will be coming up in a few days. I thank counsel for coming in on short notice and I am at your disposal. I guess Biosig should go first.

* * *

[22] THE COURT: So if you take your pulse at the wrist where the vein comes very close to the skin, you can feel the pulse?

MR. GERINGER: Yes, your Honor.

THE COURT: If you try to take it in your middle finger, it is hard to find the pulse?

MR. GERINGER: Correct, your Honor, but that is pressure under that fluid flow. There is something

similar about electronics, though. Because electric signals have to travel a long way from the heart to the fingers. So if you really wanted an accurate heartbeat electrically, you might put it closer to the heart. So part of the idea here, and this is their commercial product, your Honor, is that you could grab it and my heartbeat is way too high because I am in open court arguing. But live common or maybe it is live common, I don't know how they wired these two, but if I have just one hand, nothing. One hand nothing. Two hands, readout. [23] Fujisaki worked we said the same. So in the Markman we're going to be talking not about disagreeing about the basic way differential amplifier sorts this out. We'll be talking about this critical spaced relationship. They said the spaced relationship is critical. Fujisaki will not work in all conditions they said. Our invention will because our intention especially understands that spaced relationship.

THE COURT: There is a lot of pressure on defining spaced relationship.

MR. GERINGER: Yes, your Honor.

THE COURT: So the relationship defined by the relationship between the measurement between one point and another point.

MR. GERINGER: We say so, your Honor. Biosig will have to answer. I am looking for a big picture, but on the parties' joint chart, page 2, I have a small excerpt of a figure from the patent in which I show, yes, it is the width of the band and the width of the gap in between and the reexam we will argue that they said certain things. I am not trying to make the argument today. I am saying there were arguments about how far you space them and how fat you make

the electrodes. Also, are they going to be rings? Are they going to be plates? You might go to a gym, see a machine, it doesn't have rings, it might just have plates. I will show your Honor an example of an accused product. [24]

Again, this is not for construction, your Honor. It is merely for you to understand what the parties are disputing. The picture up on the screen is –

THE COURT: Biosig wants to talk not about lineal relationship but a geometric relationship. So, Mr. Milcetic, why should geometric be introduced here if it is not in the claim itself?

MR. MILCETIC: Geometric should be introduced –

THE COURT: It means geometric relationship.

MR. MILCETIC: We're trying to say the plain meaning here.

THE COURT: But geometric is not part of the plain meaning of the claim so why do you want to add that word?

MR. MILCETIC: We don't have to.

THE COURT: I can think of at least two relationships. Maybe there are more. There is a lineal relationship and there is a geometric relationship.

MR. MILCETIC: I think when we said geometric we were just thinking space from algebra, axis and in space. There is a spacial relationship between two electrodes. That is all.

THE COURT: Why is it geometric rather than lineal? There is also a measurement putting a straight line to a curved line.

MR. MILCETIC: Yeah. Well, I think lineal is okay. I don't think we have a problem with that. Our position is [25] basically the plain meaning.

THE COURT: So what you want to say is space relationship is a relationship according to a measured distance between two points.

MR. MILCETIC: That's fine with us.

MR. GERINGER: That's also fine for Nautilus, your Honor.

THE COURT: That is much simpler.

MR. GERINGER: To be clear, your Honor, it is the width of the pass and the width of the space between them and the width, just to use this as an example, the width of an electrode and space between.

THE COURT: So it is a relationship measured according to distance between two points?

MR. GERINGER: Yes, your Honor.

MR. MILCETIC: That's exactly correct.

THE COURT: That's a spaced relationship. So the live electrode, the first live electrode and first common electrode have a certain distance between them and the second live and second common electrodes have another distance between them.

MR. GERINGER: Correct, your Honor. That can be symmetrical or not.

THE COURT: We don't know.

MR. GERINGER: Correct.

THE COURT: So that will be the definition.

[26] MR. GERINGER: That's fine, your Honor.

MR. MILCETIC: That is fine with Biosig, your Honor.

* * *

[34] THE COURT: Let me give you my philosophy of the Markman. It is to help me decide the real issues. It is not to get an advance from one side or the other. The most successful Markman hearing will be to interpret the patent in a simplified way to give each of you room to make your arguments on the substance. So I am not looking to give either side an edge. I am not looking to make a dispositive ruling on the claim either. That will come in the next phase. A successful Markman hearing will make all our lives simpler.

[35] MR. GERINGER: Thank you, your Honor.

THE COURT: I think that is really important.

MR. GERINGER: Yes. Let me presage how simple what we think we will be arguing. We think it is as simple lineal spaced relationship that they say – sorry. If you look at the figure that is up there, they say the electrodes have to be thinner than the gap between. They say that doesn't have to be the case. That is the perfect example. Nautilus will say, There has to be a fat middle part, the spacing between has to be fatter than the actual electrode width and Biosig will say, No such limitations or can be any spaced relationship.

THE COURT: If it helps you can also add a simple contention to the definition so it becomes clear what you each argue substantively.

MR. MILCETIC: That's fine.

THE COURT: That will also help the definition. The goal is not to have a fight over the definition. The goal is to make it as simple and clear as possible.

MR. MILCETIC: We would be fine with your Honor's definition, which is the distance between two points.

* * *

United States Patent [19]

Lekhtman

[11] **Patent No: 5,337,753**

[45] **Date of Patent: Aug 16, 1994**

---

[54] HEART RATE MONITOR

[75] Inventor: **Gregory Lekhtman**, Montreal, Canada

[73] Assignee: **Biosig Instruments Inc.**, Montreal, Canada

[21] Appl. No.: **895,936**

[22] Filed: **Jun. 9, 1992**

[51] **Int. Cl.**[5] **A61B 5/04**

[52] **U.S. Cl.** **128/706**; 128/707

[58] **Field of Search** 128/901, 902, 696, 706, 128/733, 707

[56] **References Cited**

U.S. PATENT DOCUMENTS

4,319,581 3/1982 Cutter 128/707
4,513,753 4/1985 Tabata et al. 128/706
4,825,874 5/1989 Uhlemann 128/696
4,913,146 4/1990 DeCote, Jr. 128/696

Primary Examiner—William E. Kamm

Assistant Examiner—Scott M. Getzow

Attorney, Agent, or Firm—Chilton, Alix & Van Kirk

[57] **ABSTRACT**

An elongate hollow cylindrical member houses electronic circuitry and has disposed on its surface, on either end, a live electrode and a spaced common electrode. The electronic circuitry includes a difference amplifier, and electromyogram signals detected by the electrodes are applied to opposite polarity inputs of the difference amplifier. As the electromyogram signals are of substantially equal amplitude and phase, the electromyogram signals will be subtracted from each other in the difference amplifier to provide a substantially zero output due to electromyogram signals at the output of the difference amplifier. However, electrocardiograph signals, being of opposite phase, will be added in the difference amplifier so that the output of the difference amplifier is substantially due to only the electrocardiograph signals.

16 Claims, 10 Drawing Sheets

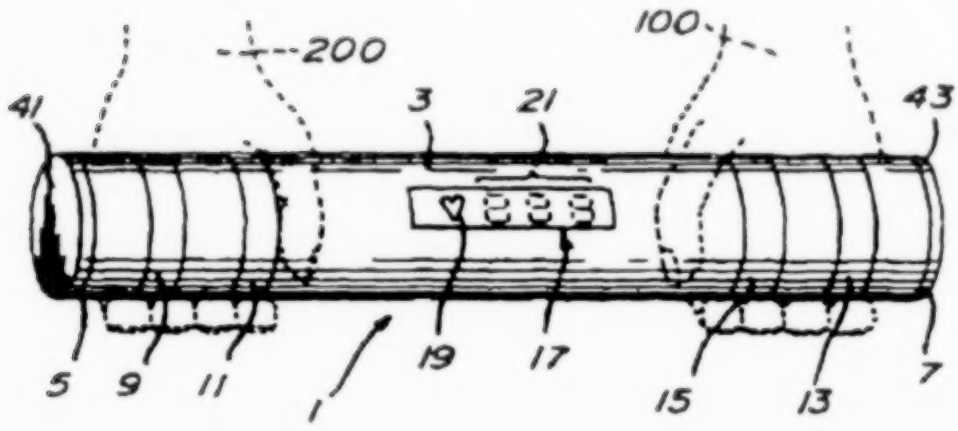

U.S. Patent Aug. 16, 1994 Sheet 1 of 10 5,337,753

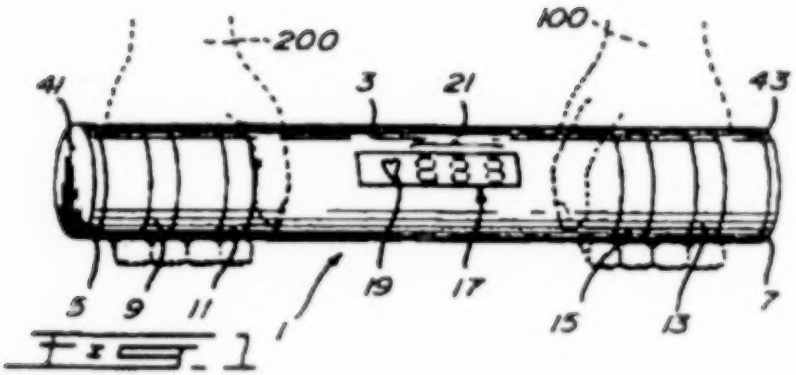

FIG. 1

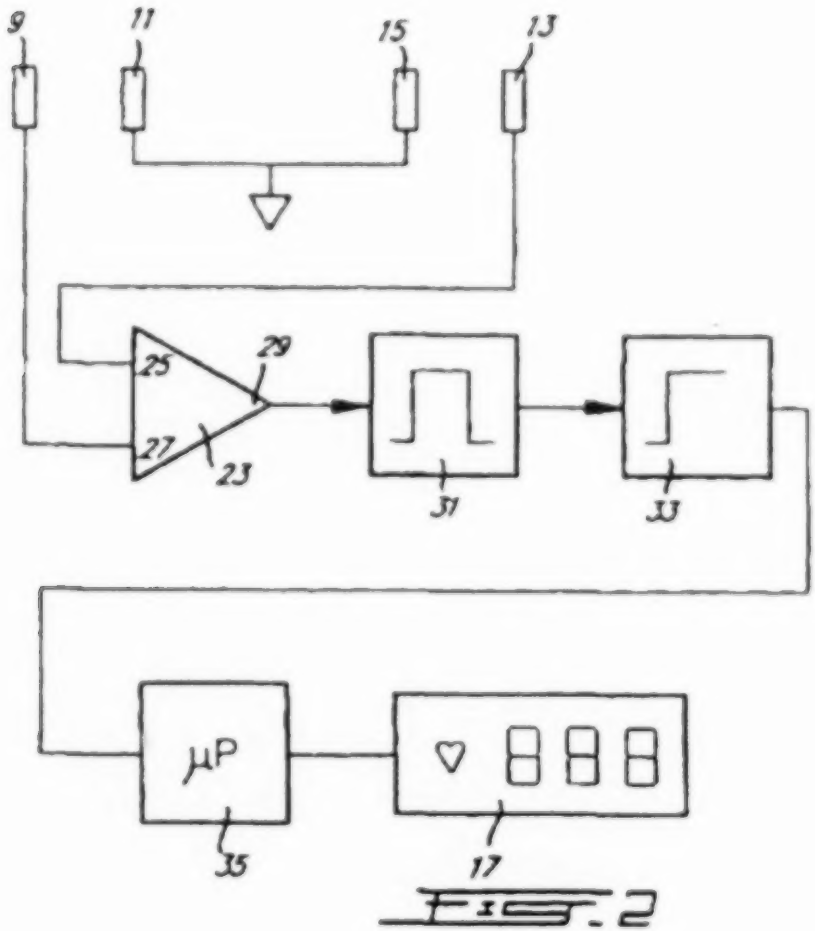

FIG. 2

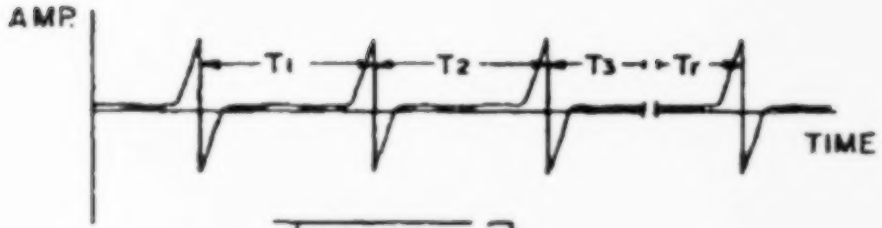

FIG. 3

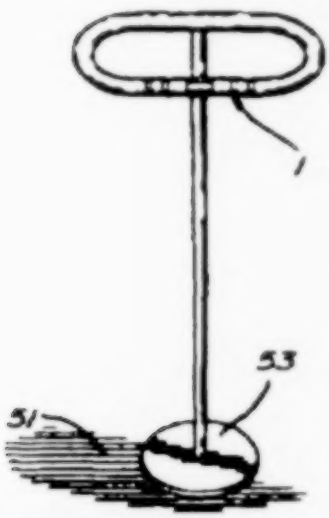

FIG. 5

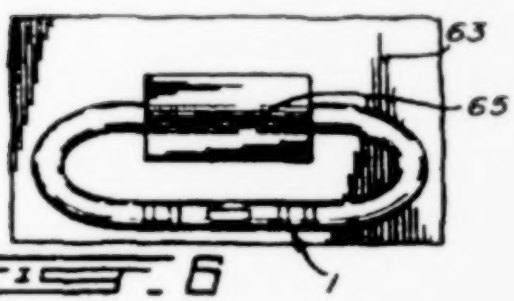

FIG. 6

Fig. 4-1

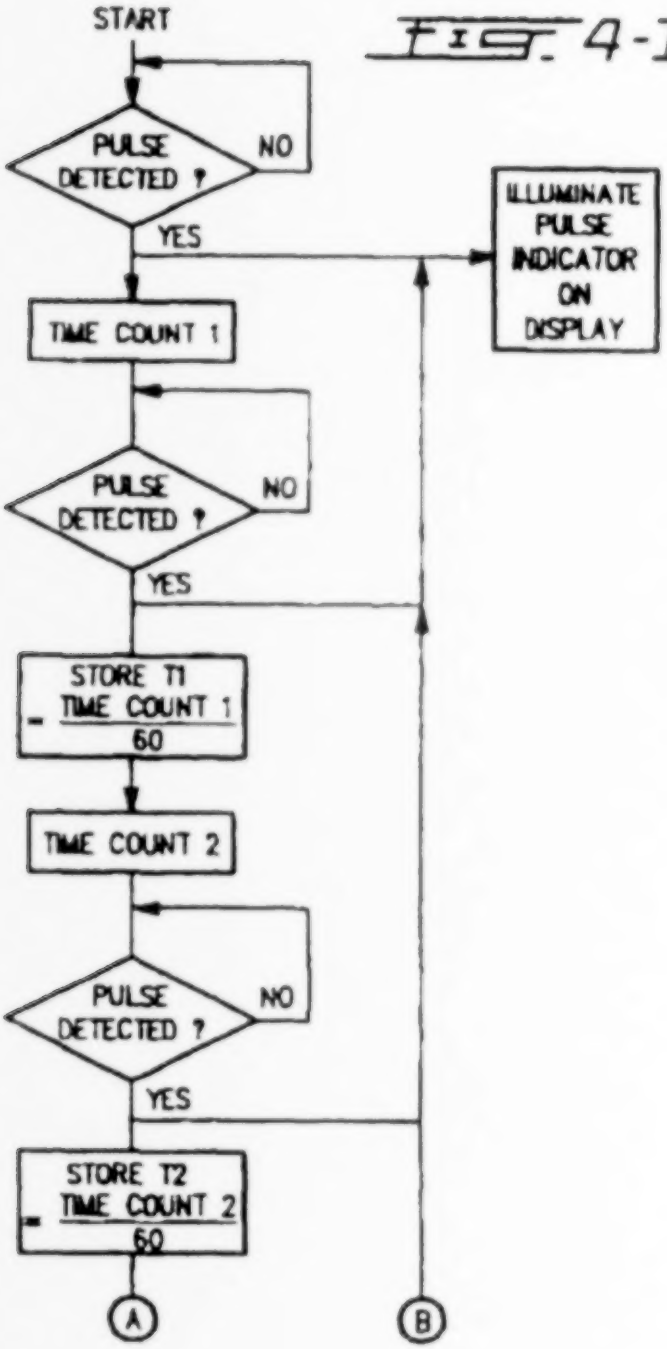
START
PULSE DETECTED ?
NO
YES
ILLUMINATE PULSE INDICATOR ON DISPLAY
TIME COUNT 1
PULSE DETECTED ?
NO
YES
STORE T1 = TIME COUNT 1 / 60
TIME COUNT 2
PULSE DETECTED ?
NO
YES
STORE T2 = TIME COUNT 2 / 60
A
B

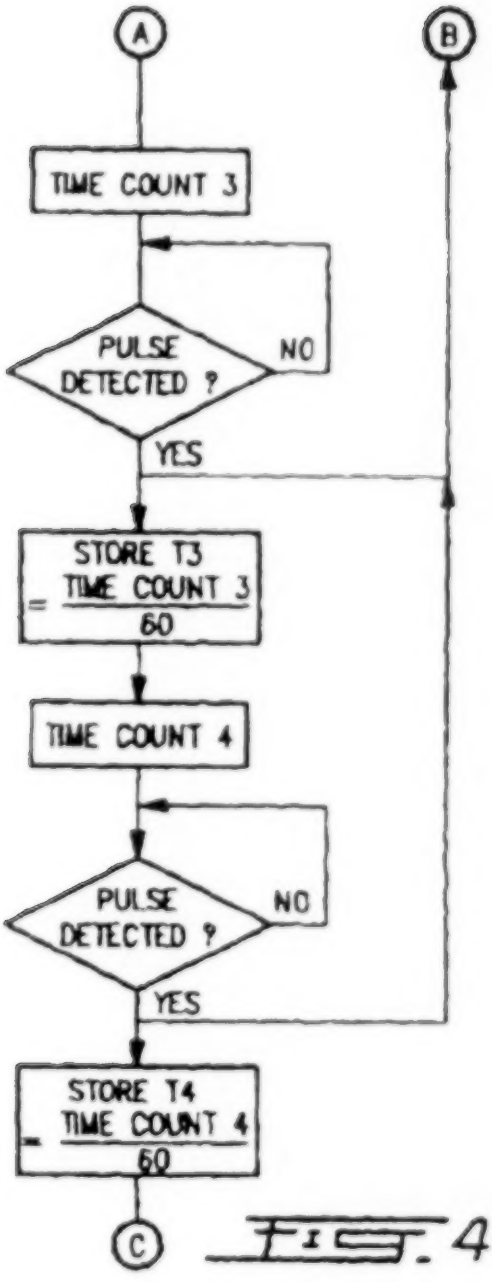
A
B
TIME COUNT 3
PULSE DETECTED ?
NO
YES
STORE T3 = TIME COUNT 3 / 60
TIME COUNT 4
PULSE DETECTED ?
NO
YES
STORE T4 = TIME COUNT 4 / 60
C

FIG. 4-2

FIG. 4-3

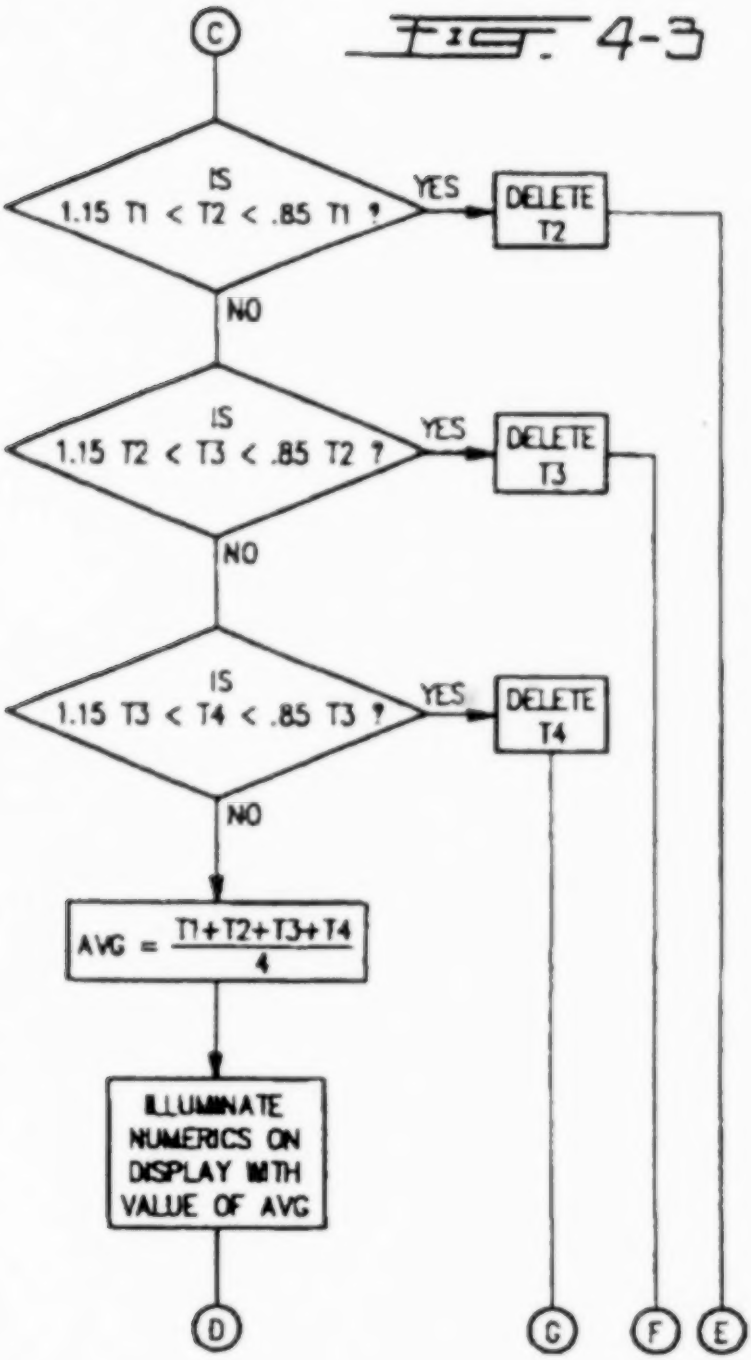
C
IS
1.15 T1 < T2 < .85 T1 ?
YES
DELETE T2
NO
IS
1.15 T2 < T3 < .85 T2 ?
YES
DELETE T3
NO
IS
1.15 T3 < T4 < .85 T3 ?
YES
DELETE T4
NO
AVG = T1+T2+T3+T4 / 4
ILLUMINATE NUMERICS ON DISPLAY WITH VALUE OF AVG
D
G
F
E

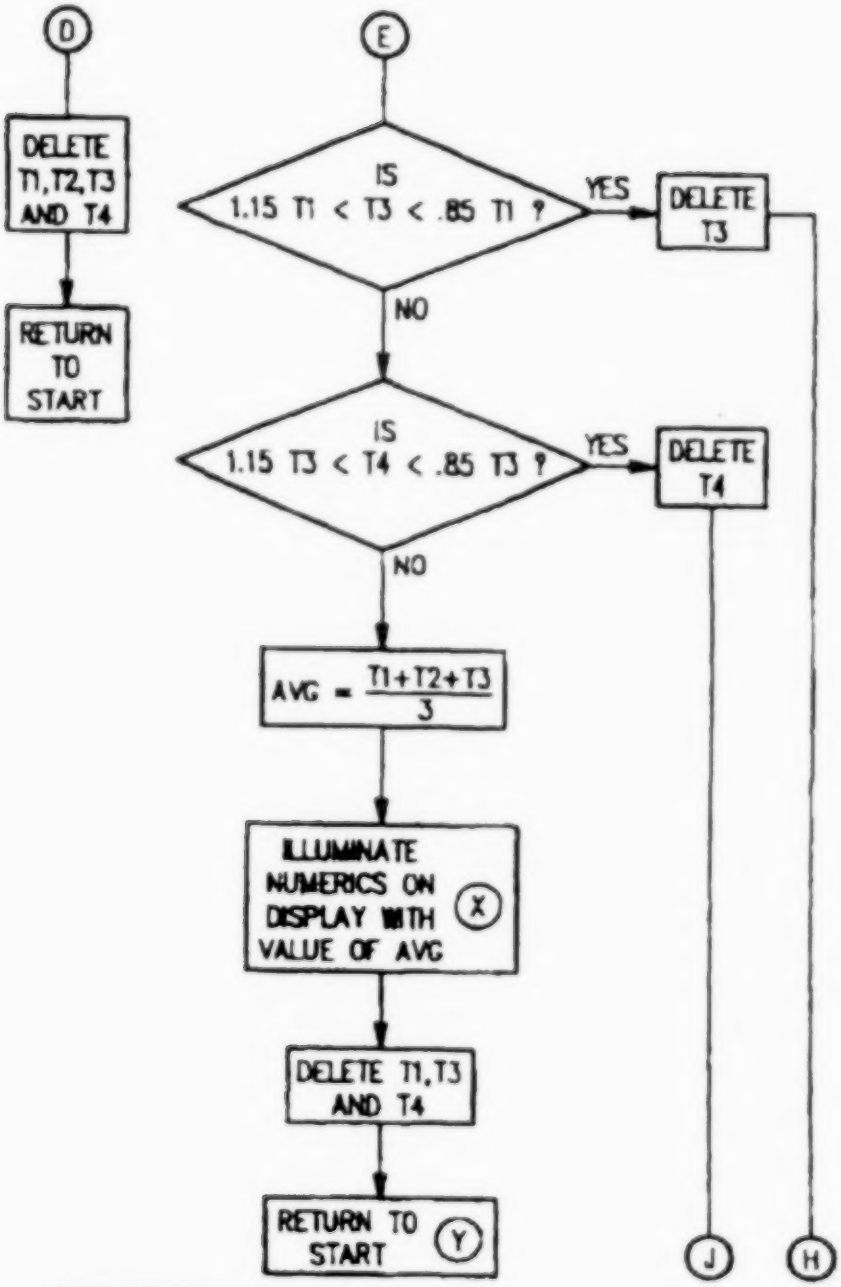
D
DELETE T1, T2, T3 AND T4
RETURN TO START
E
IS 1.15 T1 < T3 < .85 T1 ?
YES
DELETE T3
NO
IS 1.15 T3 < T4 < .85 T3 ?
YES
DELETE T4
NO
AVG = T1+T2+T3 / 3
ILLUMINATE NUMERICS ON DISPLAY WITH VALUE OF AVG
X
DELETE T1, T3 AND T4
RETURN TO START
Y
J
H

FIG. 4-4

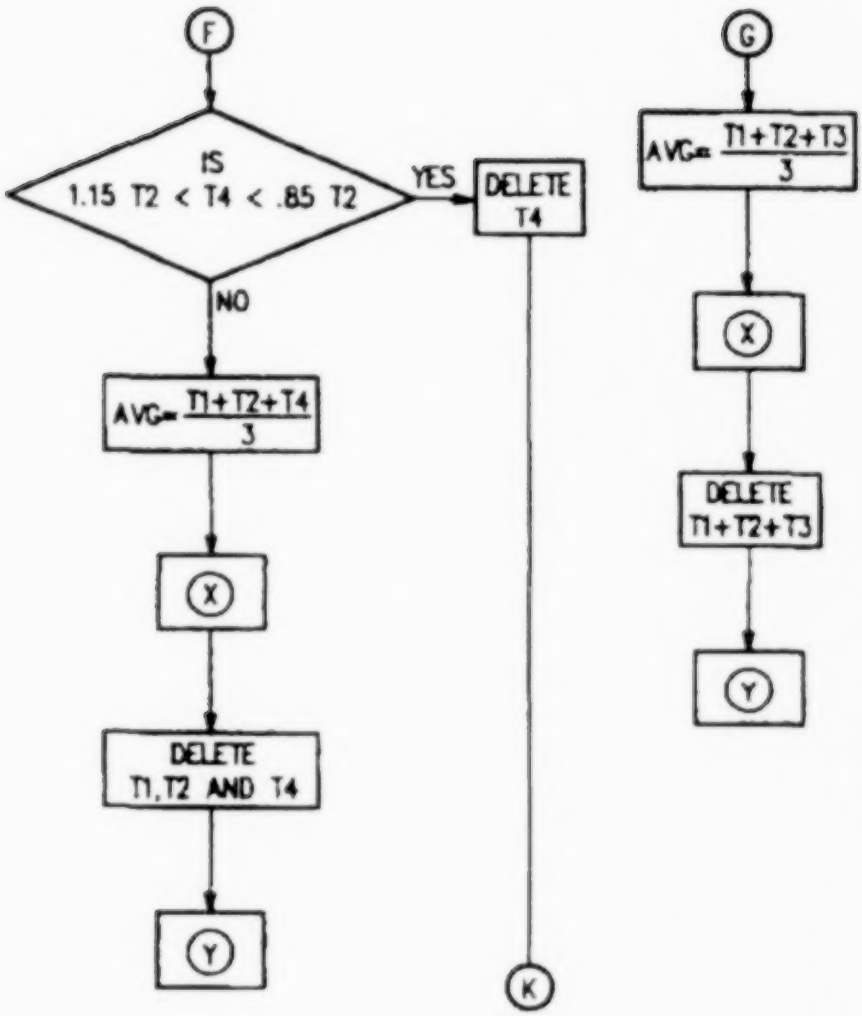
F
IS
1.15 T2 < T4 < .85 T2
YES
DELETE
T4
NO
AVG= T1+T2+T4 / 3
X
DELETE
T1, T2 AND T4
Y
K
G
AVG= T1+T2+T3 / 3
X
DELETE
T1+T2+T3
Y

Fig. 4-5

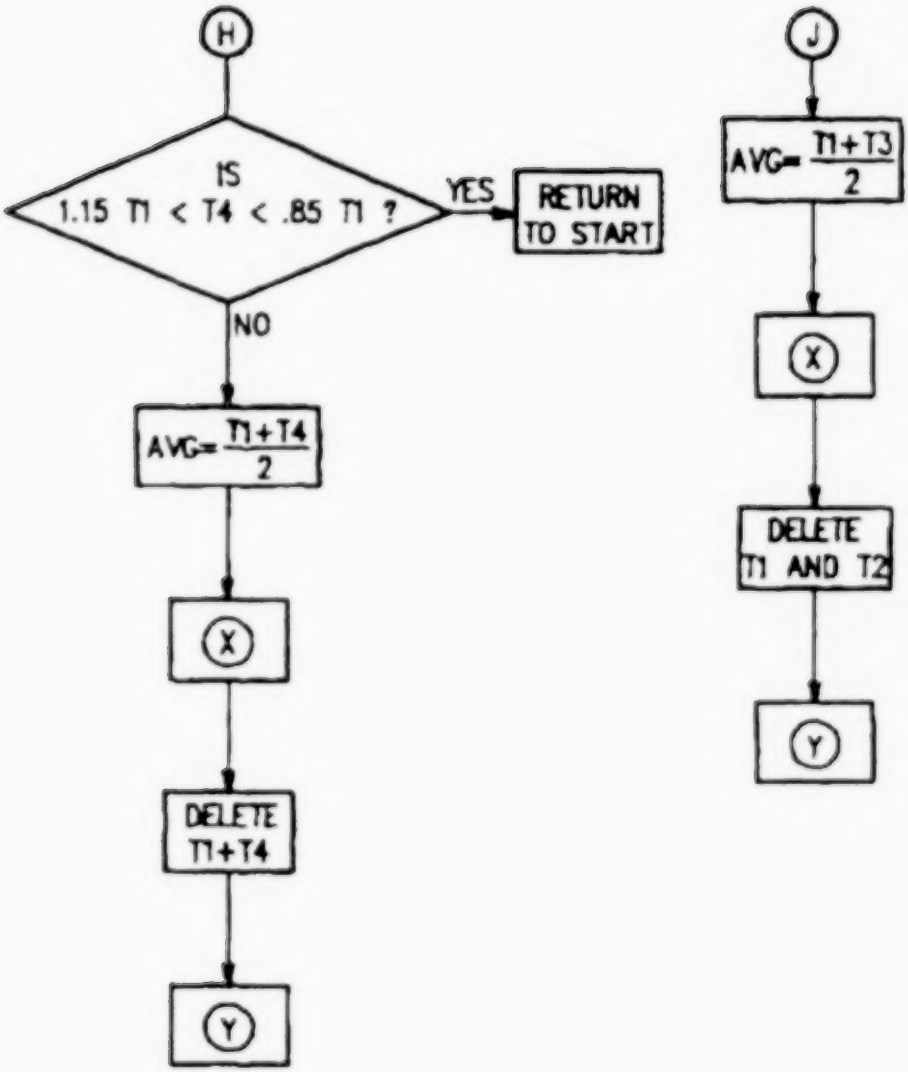
H
IS
1.15 T1 < T4 < .85 T1 ?
YES
RETURN TO START
NO
AVG= T1+T4 / 2
X
DELETE T1+T4
Y
J
AVG= T1+T3 / 2
X
DELETE T1 AND T2
Y

Fig. 4-6

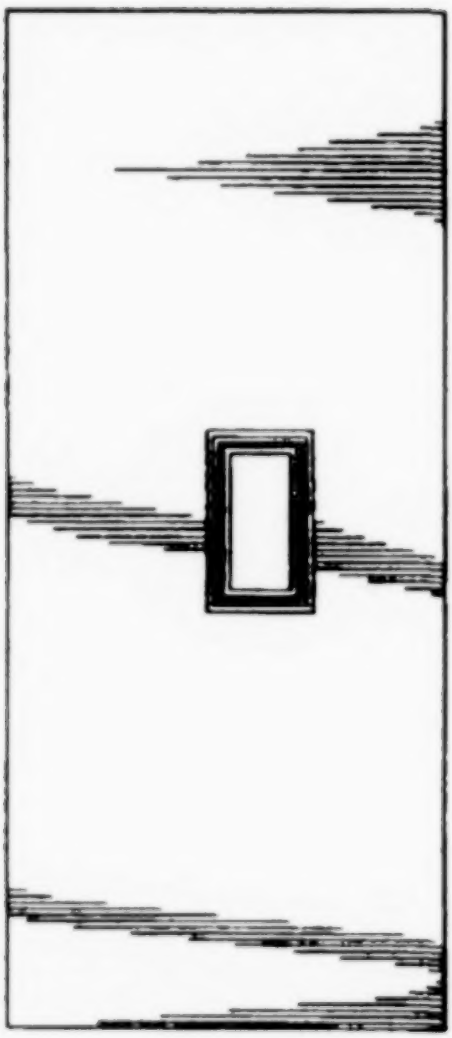

FIG. 9

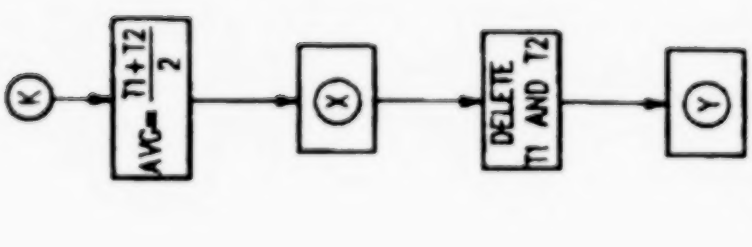

FIG. 4-7

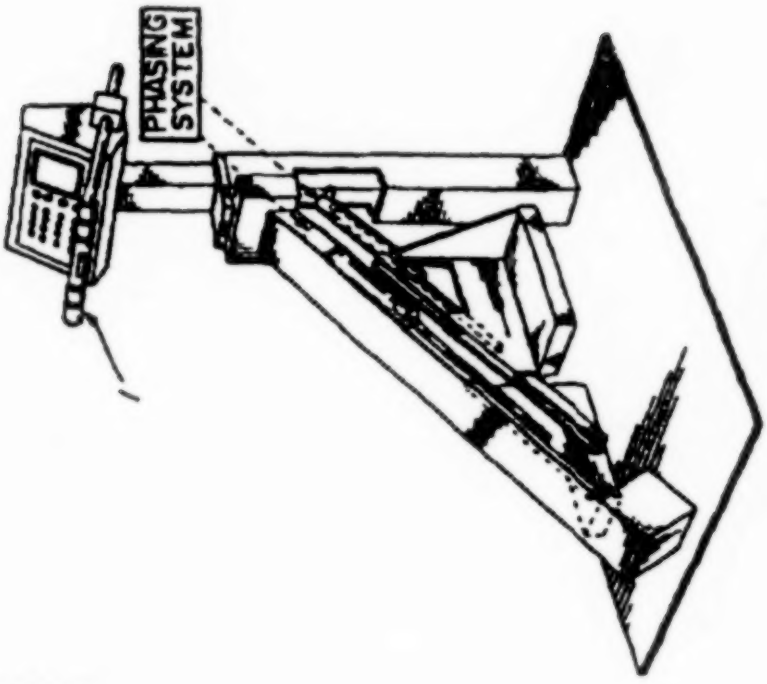

FIG. 8

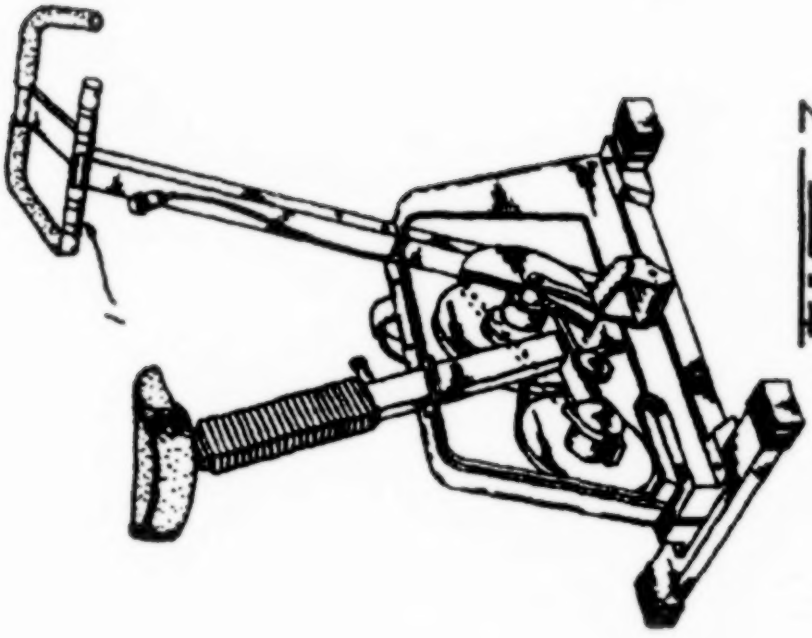

FIG. 7

HEART RATE MONITOR

BACKGROUND OF INVENTION

1. Field of the Invention

The invention relates to heart rate monitors for use in association with exercising apparatus and/or exercising procedures. More specifically, the invention relates to such a monitor which eliminates the effects of muscle artifact in the detection of a user's heart rate.

2. Description of Prior Art

Heart rate monitors for use in association with exercising apparatus and/or exercising procedures are known in the art, and one such monitor is illustrated in my U.S. Pat. No. Des. 254,569, Mar. 25, 1980, Lekhtman et al. My previous monitor, which is cylindrical in shape and which is grasped by both hands of a user, is designed to eliminate noise signals in the detection of a user's heart rate. However, such a monitor does not eliminate the effects of muscle artifact which is brought about when a user, in exercising, moves his arm or squeezes the monitor with his fingers. As electromyogram signals are in the same frequency range as electrocardiograph signals, the presence of these signals will affect the accuracy of the measured heart rate.

SUMMARY OF INVENTION

It is therefore an object of the invention to provide improved heart rate monitors for use in association with exercising apparatus and/or exercising procedures.

It is an even more specific object of the invention to provide such monitors which eliminate the effects of muscle artifact in the detection of a user's heart rate.

In accordance with the invention, the heart rate of a user is measured by measuring pulses in the hands of the user. The electromyogram signals of the hands of the users are applied to opposite polarity terminals of a difference amplifier, whereby the substantially equal amplitude and phase electromyogram signals are subtracted from each other to produce a zero level signal at the output of the differential amplifier.

In accordance with a particular embodiment of the invention there is provided a hear rate monitor for use by a user in association with exercise apparatus and/or exercise procedures, comprising:

an elongate member;

electronic circuitry including a difference amplifier having a first input terminal of a first polarity and a second input terminal of a second polarity opposite to said first polarity;

said elongate member comprising a first half and a second half;

a first live electrode and a first common electrode mounted on said first half in spaced relationship with each other;

a second live electrode and a second common electrode mounted on said second half in spaced relationship with each other;

said first and second common electrodes being connected to each other and to a point of common potential;

said first live electrode being connected to said first terminal of said difference amplifier and said second live electrode being connected to said second terminal of said difference amplifier;

a display device disposed on said elongate member;

wherein, said elongate member is held by said user with one hand of the user on said first half contacting said first live electrode and said first common electrode, and with the other hand of the user on said second half contacting said second live electrode and said second common electrode;

whereby, a first electromyogram signal will be detected between said first live electrode and said first common electrode, and a second electromyogram signal, of substantially equal magnitude and phase to said first electromyogram signal will be detected between said first live electrode and said second common electrode;

so that, when said first electromyogram signal is applied to said first terminal and said second electromyogram signal is applied to said second terminal, the first and second electromyogram signals will be subtracted from each other to produce a substantially zero electromyogram signal at the output of said difference amplifier.

BRIEF DESCRIPTION OF DRAWINGS

The invention will be better understood by an examination of the following description, together with the accompanying drawings, in which:

FIG. **1** is a perspective view of a heart rate monitor in accordance with the invention;

FIG. **2** illustrates in block diagram form the electronic circuitry for carrying out the measurements in the inventive heart rate monitor;

FIG. **3** is a graph of an electrocardiograph useful in understanding the operation of the present heart rate monitor;

FIGS. **4-1** to **4-7** comprise a flow chart of the program which drives the microprocessor of the inventive heart rate monitor;

FIG. **5** illustrates a floor mounted heart rate monitor;

FIG. **6** illustrates a wall mounted heart rate monitor;

FIG. **7** illustrates a heart rate monitor mounted on an exercising bicycle;

FIG. **8** illustrates a heart rate monitor used in association with a stair climbing exercise apparatus; and

FIG. **9** illustrates an insert which can be inserted into the tubular member.

DESCRIPTION OF PREFERRED EMBODIMENTS

Turning now to FIG. **1**, the heart rate monitor, illustrated generally at **1**, comprises an elongate member, preferably, a cylindrical member **3** having a first half **5** and a second half **7**. Disposed on the first half is a first live electrode **9** which comprises a ring member of a conductive material force-fit onto the cylindrical member. A first common electrode **11**, which also comprises a ring member of a conductive material and which is also force-fit onto the cylindrical member, is also disposed on the first half and spaced from the first live electrode **9**.

Disposed on the second half is a second live electrode **13**, which, once again, comprises a ring member of a conductive material force-fit onto the cylindrical member, and a second common electrode, also comprising a ring member of a conductive material force-fit onto the cylindrical member and, once again, spaced from the second live electrode **13**.

Preferably disposed in the middle of the cylindrical material is a display device **17** having a pulse indicator, preferably a heart **19**, and a numerical indicator, illustrated at **21**.

Plugs **41** and **43**, inserted at either end of the cylindrical member are preferably elasticized and force-fit into the member so that the cylindrical member is waterproofingly sealed.

Turning now to FIG. **2**, as can be seen, common electrodes **11** and **15** are connected to each other and to a point of common potential, for example, ground. Live electrode **9** is connected to one input **27** of a difference amplifier **23**, and live electrode **13** is connected to a second input, **25**, of the difference ampli-

fier **23**. The inputs **25** and **27** can comprise a positive and a negative input respectively or vice-versa. In any case, inputs **25** and **27** are of opposite polarity.

Output **29** of the difference amplifier is connected to a bandpass filter **31**. The bandpass filter will extract "R" waves from the electrocardiograph signals.

The output of filter **31** is connected to a threshold limiter **33** which produces a 200 msec square pulse synchronized with each R wave. The level of limiter **33** is automatically adjusted to the average amplitude of the R wave. The output of **33** is fed to a microprocessor **35** which is driven by the program illustrated in FIGS. **4-1** to **4-7** herein. The display **17** is driven by the microprocessor **35** as will be seen in the description of FIGS. **4-1** to **4-7**.

In operation, the left-hand **100** of the user is placed over both electrodes **13** and **15** so that it is in physical and electrical contact with both electrodes. In the same way, the right-hand **200** of the user is placed over the electrodes **9** and **11** so that it is in physical and electrical contact with both electrodes.

Noise received by the electrodes **9** and **11** will be of substantially equal amplitude and substantially equal phase to the noise received by the electrodes **13** and **15**. Thus, the noise signals will be subtracted from each other in the difference amplifier **23** to thereby be cancelled in the difference amplifier.

The electromyogram signals received by electrodes **9** and **11** will also be of substantially equal magnitude and phase to the electromyogram signals received by the electrodes **13** and **15**. Accordingly, they will also be cancelled out in the difference aplifier **23**.

However, the electrocardiograph signals received by the electrodes **9** and **11** are of opposite phase to the electrocardiograph signals received by the electrodes **13** and **15**. Accordingly, the electrocardiograph signals will be added to each other in the difference amplifier **23**, so that the output of **23** is substantially dependent only on the electrocardiograph signals.

In accordance with one embodiment of the invention, cylindrical member **3** is hollow, and the electronic circuitry is mounted in the hollow interior of the member **3**.

FIG. **3** illustrates such electrocardiograph signals. As can be seen, the heart pulses are separated from each other in time by times T1, T2, T3 . . . Tn. The magnitudes of T1, T2, T3 . . . Tn are typically of approximately the same value under any given condition.

In accordance with the invention, the pulse indicator **19** is illuminated on receipt of each pulse in the electrocardiograph signal. A pulse rate numerical display is calculated by using four adjacent time measurements. Each measurement is verified for correctness by comparing it with a previous measurement. If a current measurement is less than 85% of the previous measurement or greater than 115% of a previous measurement, then it is considered an inaccuracy either in the measurement or in breakthrough of noise signals and is discarded in calculating the average.

As seen in FIGS. **4-1** to **4-7**, in the microprocessor, each time a pulse is detected, the pulse indicator on the display is illuminated. Every time a pulse is detected, a time count is begun and the computer

then monitors for the next pulse. When the next pulse is detected, the time counted in the computer between the two pulses is stored and a new time count begins. When a third pulse is detected, the second time measurement is stored, and in a similar manner, the third and fourth time measurements are stored.

The time measurements are then compared each to its previous one. If a time measurement is greater than 115% of the previous measurement or less than 85% of the previous measurement, that measurement is deleted. The remaining measurements in four adjacent measurements are then averaged, and this average value then drives the display to illuminate the numerics.

If the second, third and fourth measurements are all either greater than 115% of the first or all less than 85% of the first measurement, then the first measurement must be suspect and an average is not calculated for that particular cycle. In fact, an average is calculated only if there are at least two valid measurements in the cycle.

The cycle keeps repeating itself to provide new values for continuously driving and refreshing the numerical display.

The heart rate monitor in accordance with the invention can be held by a user when performing exercising procedures such as jogging or the like. Alternatively, it could be adapted to be mounted on a floor **51** as illustrated in FIG. **5**. In the FIG. **5** embodiment, the monitor is mounted on a base **53** which is then disposed on the floor.

It is also possible to provide a monitor for mounting on a wall **63** as illustrated in FIG. 7. Once again,

the monitor would be mounted on a base **65** which would then be mounted on the wall **63**.

As illustrated in FIG. **7**, the heart rate monitor could also be mounted on an exercycle, and it could be integrated with or it can comprise the handle bar of the exercycle. The heart rate monitor could also be incorporated in a stair climbing exercise apparatus as illustrated in FIG. **8**. The heart rate monitor would comprise or be integrated with the handle which is held by the exerciser.

In the FIGS. **7** and **8** embodiments, although the electronic circuitry could be housed in the elongate member **3**, it could also be housed in the apparatus itself, for example, with other electronic circuitry used by the apparatus. In that case, there would still exist the connections between the electrodes and the difference amplifier, and the microprocessor and the display, which would still be on the elongate member.

Accordingly, it can be seen that the heart rate monitor in accordance with the invention can either be carried by an exerciser as a stand-alone unit, or it could be adapted to be mounted on a floor or on a wall. It also could be adapted to comprise a part of an exercise apparatus. In addition, the particular floor or wall mountings and exercise apparatus illustrated are only examples, and the monitor can be used with other mountings and exercise apparatus.

Also, in accordance with the invention, a paper insert, such as illustrated in FIG. **9**, can be inserted within the tubular member **3**. The insert can contain the product's name, for example, INSTA PULSE TM, as well as other graphics and legends. The paper insert would be rolled up with the graphics on the top

surface and slid into the tubular member which would comprise a transparent material so that all of the information imprinted on the insert would be seen through the top surface of the tubular member.

Further, although the electrodes have been illustrated as rings, other configurations, e.g. half rings, spaced plates, etc. could be used.

Although several embodiments have been described, this was for the purpose of illustrating, but not limiting, the invention. Various modifications, which will come readily to the mind of one skilled in the art, are within the scope of the invention as defined in the appended claims.

I claim:

1. A heart rate monitor for use by a user in association with exercise apparatus and/or exercise procedures, comprising;

an elongate member;

electronic circuitry including a difference amplifier having a first input terminal of a first polarity and a second input terminal of a second polarity opposite to said first polarity;

said elongate member comprising a first half and a second half;

a first live electrode and a first common electrode mounted on said first half in spaced relationship with each other;

a second live electrode and a second common electrode mounted on said second half in spaced relationship with each other;

said first and second common electrodes being connected to each other and to a point of common potential;

said first live electrode being connected to said first terminal of said difference amplifier and said second live electrode being connected to said second terminal of said difference amplifier;

a display device disposed on said elongate member;

wherein, said elongate member is held by said user with one hand of the user on said first half contacting said first live electrode and said first common electrode, and with the other hand of the user on said second half contacting said second live electrode and said second common electrode;

whereby, a first electromyogram signal will be detected between said first live electrode and said first common electrode, and a second electromyogram signal, of substantially equal magnitude and phase to said first electromyogram signal will be detected between said second live electrode and said second common electrode;

so that, when said first electromyogram signal is applied to said first terminal and said second electromyogram signal is applied to said second terminal, the first and second electromyogram signals will be subtracted from each other to produce a substantially zero electromyogram signal at the output of said difference amplifier;

and whereby a first electrocardiograph signal will be detected between said first live electrode and said first common electrode and a second electrocardiograph signal, of substantially equal magnitude but of opposite phase to said first electrocardiograph signal will be detected between said second live electrode and said second common electrode;

so that, when said first electrocardiograph signal is applied to said first terminal and said second electrocardiograph signal is applied to said second terminal, the first and second electrocardiograph signals will be added to each other to produce a non-zero electrocardiograph signal at the output of said difference amplifier;

means for measuring time intervals between heart pulses on detected electrocardiograph signal;

means for calculating the heart rate of said user using said measure time intervals;

said means for calculating being connected to said display device; whereby, the heart rate of said user is displayed on said display device.

2. A monitor as defined in claim 1 wherein said elongate member comprises a hollow cylindrical member;

said electronic circuitry being housed in the interior of said hollow cylindrical member.

3. A monitor as defined in claim 2 wherein said first live electrode comprises a first ring member of a conductive material mounted on said first half of said

elongate member, and wherein said first common electrode comprises a second ring member of a conductive material mounted on said first half of said elongate member and spaced from said first ring member;

and wherein said second live electrode comprises a third ring member of a conductive material mounted on said second half of said elongate member and wherein said second common electrode comprises a fourth ring member of a conductive material mounted on said second half of said elongate member and spaced from said third ring member.

4. A monitor as defined in claim **3** and wherein said means for measuring time intervals comprises;

a bandpass filter, the output of said difference amplifier being connected to an input of said bandpass filter;

a threshold limiter, the output of said bandpass filter being connected to an input of said threshold limiter;

and wherein said means for calculating the heart rate comprises;

a microprocessor, the output of said threshold limiter being connected to an input of said microprocessor;

the output of said microprocessor being connected to said display device.

5. A monitor as defined in claim **4** wherein said display device comprises;

a pulse indicator adapted to be illuminated each time a heart pulse of the user is detected; and

a pulse rate indicator comprising a numerical indication of the pulse rate of the user.

6. A monitor as defined in claim **5** and comprising elasticized plugs force-fit into both ends of said cylindrical member;

whereby, the interior of said hollow cylindrical member is waterproofingly sealed.

7. A monitor as defined in any one of claims **1** or **6** and including a stand means for mounting the monitor on the floor;

said stand means including a base and an upwardly extending member.

8. A monitor as defined in any one of claims **1** or **6** and including a means for mounting said monitor on a wall;

said means comprising a base.

9. A monitor as defined in any one of claims **2** or **6** and including insert means;

said insert means comprising a paper-like material having graphics and alphabetic information imprinted on one surface thereof;

said hollow cylindrical member comprising a transparent material;

said insert means being inserted into said hollow cylindrical member such that the graphics are disposed against the wall of said hollow cylindrical member so that said graphics can

be seen on the outside of said hollow cylindrical member.

10. A monitor as defined in claim **6** wherein said cylindrical member is mounted on an exercise apparatus.

11. A monitor as defined in claim **1** wherein said elongate member is mounted on an exercise apparatus;

said electronic circuitry being mounted in said exercise apparatus.

12. A monitor as defined in claim **11** wherein said elongate member comprises a hollow cylindrical member.

13. A monitor as defined in claim **12** wherein said first live electrode comprises a first ring member of a conductive material mounted on said first half of said elongate member, and wherein said first common electrode comprises a second ring member of a conductive material mounted on said first half of said elongate member and spaced from said first ring member;

and wherein said second live electrode comprises a third ring member of a conductive material mounted on said second half of said elongate member and wherein said second common electrode comprises a fourth ring member of a conductive material mounted on said second half of said elongate member and spaced from said third ring member.

14. A monitor as defined in claim **13** and wherein said electronic circuitry further includes;

a bandpass filter, the output of said difference amplifier being connected to an input of said bandpass filter;

a threshold limiter, the output of said bandpass filter being connected to an input of said threshold limiter;

a microprocessor, the output of said threshold limiter being connected to an input of said microprocessor;

the output of said microprocessor being connected to said display device.

15. A monitor as defined in claim **14** wherein said display device comprises;

a pulse indicator adapted to be illuminated each time a heart pulse of the user is detected; and

a pulse rate indicator comprising a numerical indication of the pulse rate of the user.

16. A monitor as defined in claim **15** and comprising elasticized plugs force-fit into both ends of said cylindrical member;

whereby, the interior of said hollow cylindrical member is waterproofingly sealed.

* * * * *

* * *

PATENT APPLICATION SERIAL NO. 07/895936

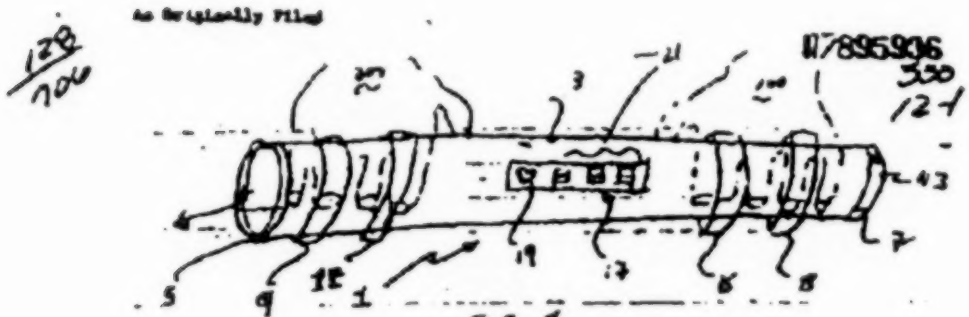

FIG. 1

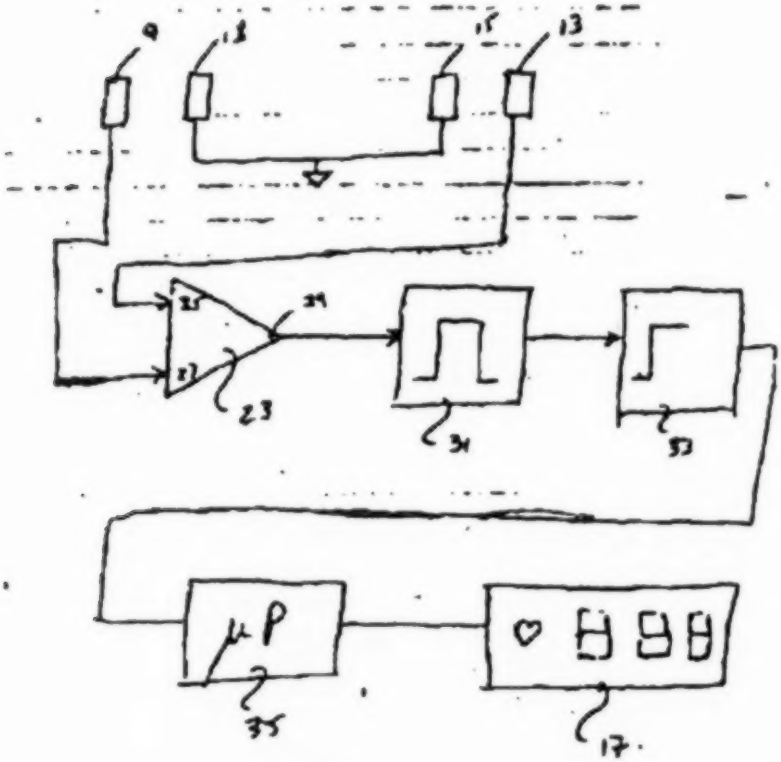

FIG. 2.

* * *

* * *

File No.: 7555-13 "US" MS/sm Montreal, Canada
January 5, 1994

IN THE U.S. PATENT AND TRADEMARK OFFICE

In re Application of:
GREGORY LEKHTMAN
For: HEART RATE MONITOR
Filed: June 9, 1992
Ser. No.: 895,936
Examiner: S. Getzow
Group Art Unit: 335

The Commissioner of Patents
And Trademarks,
Washington, D.C. 20231
U.S.A.

VOLUNTARY AMENDMENT

Sir:

Following Applicant's Agent's discussion with the Examiner on December 13, 1993, the Patent Office is respectfully requested to amend the claims as follows:

CLAIMS:

Amend claim 1 as follows:

1. (twice amended) A heart rate monitor for use by a user in association with exercise apparatus and/or exercise procedures, comprising;

an elongate member;

electronic circuitry including a difference amplifier having a first input terminal of a first polarity and a second input terminal of a second polarity opposite to said first polarity;

said elongate member comprising a first half and a second half;

a first live electrode and a first common electrode mounted on said first half in spaced relationship with each other;

a second live electrode and a second common electrode mounted on said second half in spaced relationship with each other;

said first and second common electrodes being connected to each other and to a point of common potential;

said first live electrode being connected to said first terminal of said difference amplifier and said second live electrode being connected to said second terminal of said difference amplifier;

a display device disposed on said elongate member;

wherein, said elongate member is held by said user with one hand of the user on said first half contacting said first live electrode and said first common electrode, and with the other hand of the user on

said second half contacting said second live electrode and said second common electrode;

whereby, a first electromyogram signal will be detected between said first live electrode and said first common electrode, and a second electromyogram signal, of substantially equal magnitude and phase to said first electromyogram signal will be detected between said second live electrode and said second common electrode;

so that, when said first electromyogram signal is applied to said first terminal and said second electromyogram signal is applied to said second terminal, the first and second electromyogram signals will be subtracted from each other to produce a substantially zero electromyogram signal at the output of said difference amplifier;

and whereby a first electrocardiograph signal will be detected between said first live electrode and said first common electrode and a second electrocardiograph signal, of substantially equal magnitude but of opposite phase to said first electrocardiograph signal will be detected between said second live electrode and said second common electrode;

so that, when said first electrocardiograph signal is applied to said first terminal and said second electrocardiograph signal is applied to said second terminal, the first and second electrocardiograph signals will be added to each other to produce a non-zero electrocardiograph signal at the output of said difference amplifier;

[the signal at the output of said difference amplifier comprising the heart rate of said user.] <u>means for measuring time intervals between heart pulses on the detected electrocardiograph signal;</u>

means for calculating the heart rate of said user using said measure time intervals;

said means for calculating being connected to said display device;

whereby, the heart rate of said user is displayed on said display device.

Kindly amend claim 4 as follows.

4. (amended) A monitor as defined in claim 3 and wherein said [electronic circuitry further includes:] means for measuring time intervals comprises;

a bandpass filter, the output of said difference amplifier being connected to an input of said bandpass filter;

a threshold limiter, the output of said bandpass filter being connected to an input of said threshold limiter;

and wherein said means for calculating the heart rate comprises;

a microprocessor, the output of said threshold limiter being connected to an input of said microprocessor;

the output of said microprocessor being connected to said display device.

REMARKS

Claims 1 to 16 remain in the application.

Claim 1 has been amended to include the means for measuring the time intervals between heart pulses on the detected electrocardiograph signal as well as means for calculating the heart rate using the measured time intervals.

Claim 4 further defines these means. Specifically, the means for measuring is defined as the bandpass filter 31 and the threshold limiter 33 and the means for calculating is defined as the microprocessor 35.

Accordingly, it is submitted that the claims have been amended to comply with the requirements of the Examiner as expressed during the telephone call.

Should Examiner consider that there are any further matters requiring resolution, he is respectfully invited to telephone the undersigned.

Respectfully,
GREGORY LEKHTMAN
By:

s/

Melvin Sher (Reg. No. 26,368)
Attorney or Agent of Record
Swabey Ogilvy Renault
1001 Boul. de Maisonneuve ouest
Montreal, Quebec,
Canada H3A 3CS
Tel: (514) 845-7126

* * *

[SEAL] UNITED STATES DEPARTMENT OF COMMERCE
Patent and Trademark Office
Address: COMMISSIONER OF PATENTS AND TRADEMARKS
Washington, D.C. 20231

SERIAL NUMBER	FILING DATE	FIRST NAMED APPLICANT	ATTORNEY DOCKET NUMBER
07/895,936	06/09/92	LEKHTMAN G	SBY/151/US

EXAMINER
GETZOW, S

ART UNIT	PAPER NUMBER
3305	*9*

33M1/0119

CHILTON, ALIX & VAN KIRK
750 MAIN ST.
HARTFORD, CT

DATE MAILED:
01/19/94

NOTICE OF ALLOWABILITY

PART I.

1. ☒ This communication is responsive to *amendment after final action of 5 January 1994*.

2. ☒ All the claims being allowable, PROSECUTION ON THE MERITS IS (OR REMAINS) CLOSED in this application if not included herewith (or previously mailed), a Notice Of Allowance And Issue Fee Due or other appropriate communication will be sent in due course.

3. ☒ The allowed claims are *1-16*.

4. ☐ The drawings filed on _____ are acceptable.

5. ☐ Acknowledgment is made of the claim for priority under 35 U.S.C. 119. The certified copy has [ ] been received. [ ] not been received. [ ] been filed in parent application Serial No. _____ filed on _____

6. ☐ Note the attached Examiner's Amendment.

7. ☐ Note the attached Examiner Interview Summary Record, PTOL-413.

8. ☐ Note the attached Examiner's Statement of Reasons for Allowance.

9. ☐ Note the attached NOTICE OF REFERENCES CITED, PTO-892.

10. ☐ Note the attached INFORMATION DISCLOSURE CITATION, PTO-1449.

PART II.

A SHORTEENED STATUTORY PERIOD FOR RESPONSE to comply with the requirements noted below is set to EXPIRE THREE MONTHS FROM THE "DATE MAILED" indicated on this form. Failure to timely comply will result in the ABANDONMENT of this application. Extensions of time may be obtained under the provisions of 37 CFR 1.136(a).

1. ☐ Note the attached EXAMINER'S AMENDMENT or NOTICE OF INFORMAL APPLICATION, PTO-152, which discloses that the oath or declaration is deficient. A SUBSTITUTE OATH OR DECLARATION IS REQUIRED.

2. ☒ APPLICANT MUST MAKE THE DRAWING CHANGES INDICATED BELOW IN THE MANNER SET FORTH ON THE REVERSE SIDE OF THIS PAPER.

   a. ☒ Drawing informalities are indicated on the NOTICE RE PATENT DRAWINGS, PTO-948, attached hereto or to Paper No. 4 CORRECTION IS REQUIRED.

   b. ☐ The proposed drawing correction filed on _____ has been approved by the examiner. CORRECTION IS REQUIRED.

   c. ☐ Approved drawing corrections are described by the examiner in the attached EXAMINER'S AMENDMENT. CORRECTION IS REQUIRED.

   d. ☒ Formal drawings are now REQUIRED.

Any response to this letter should include in the upper right hand corner, the following information from the NOTICE OF ALLOWANCE AND ISSUE FEE DUE: ISSUE BATCH NUMBER, DATE OF THE NOTICE OF ALLOWANCE, AND SERIAL NUMBER.

Attachments:

__ Examiner's Amendment

__ Examiner Interview Summary Record, PTOL-413

__ Reasons for Allowance

__ Notice of References Cited, PTO-892

__ Information Disclosure Citation, PTO-1449

__ Notice of Informal Application, PTO-152

__ Notice re Patent Drawings, PTO-948

__ Listing of Bonded Draftsmen

__ Other

s/
WILLIAM E. KAMM
PRIMARY ART
EXAMINER
ART UNIT 335

* * *

EX PARTE REEXAMINATION COMMUNICATION TRANSMITTAL FORM

REEXAMINATION CONTROL NO. 90/010,366, 90/010612

PATENT NO. 5337753
ART UNIT 3992

* * *

DETAILED ACTION

1) This Office action addresses claims 1-16 of United States Patent Number 5,337,753 (Lekhtman). Reexamination 90/010612 has been merged with reexamination 90/010366. This action is in response to the request for reconsideration filed 4/5/10. Claims 1-16 are now confirmed.

General Response

2) In response to the request for reconsideration filed 4/5/10, examiner notes the following: The crucial claim language to be discussed is the following limitation of claim 1 :

Whereby a first electromyogram signal will be detected between said first live electrode and said first common electrode, and a second electromyogram signal, of substantially equal magnitude and phase to said first electromyogram signal will be detected between said second live electrode and said second common electrode; so that, when said first electromyogram signal is applied to said first terminal and said second electromyogram signal is applied to said second terminal, the first and second electromyogram

signals will be subtracted from each other to produce a substantially zero electromyogram signal at the output of said difference amplifier.

Effectively, this claim limitation requires that EMG signals (noise), which are detected through the same electrodes that detect ECG (heart rate) signals, be of substantially equal magnitude and phase so that they cancel each other out when fed through a difference amplifier.

In the most recent rejection of claim 1, examiner stated that the De Vel reference teaches that it was known to adjust the geometric properties of electrodes to help minimize noise, and that it would have been obvious to adjust the electrodes so that they create substantially equal EMG signals.

In the current response, patent owner (PO) argues that configuring the electrodes to substantially minimize the detected EMG from both hands on an exercise machine is not taught by the prior art, and that one of ordinary skill would adjust for noise downstream of the difference amplifier. PO also argues that De Vel discusses using bandpass filters downstream of the difference amplifier to increase S/N ratio, so there is no motivation to balance the EMG waveforms at the electrodes. PO also argues that the electrodes in De Vel were presumably placed close to the heart, rather than at a user's hands, which would result in a higher S/N ratio.

Examiner agrees that De Vel does not teach exactly how to adjust the geometric properties and locations of ECG electrodes to cancel out EMG using a difference amplifier. De Vel focuses on utilizing bandpass filters instead of balancing EMG from specific muscle groups, and appears directed towards

heart rate measurements directly from the chest, rather than from electrodes gripped by a pair of hands. Therefore, the EMG waveforms as detected would not necessarily be of substantially equal magnitude and phase.

Therefore, in light of PO's arguments filed 4/5/10, as well as the declaration of Gregory Lekhtman filed 6/15/09, examiner withdraws the previous rejections. Examiner finds the presented arguments to be persuasive. Claims 1-16 are thereby confirmed as explained below.

A reasons for confirmation for claims 1-16 is below.

STATEMENT OF REASONS FOR PATENTABILITY AND/OR CONFIRMATION

3) Claims 1-16 are confirmed.

The following is an examiner's statement of reasons for confirmation of the claims found patentable in this reexamination proceeding:

Referring to claim 1, the claim is confirmed over the prior art that was explained in the request and determined to raise a substantial new question of patentability in the order granting reexamination and over the prior art that was applied and discussed by the examiner in the present reexamination proceeding because that prior art does not explicitly teach a heart rate monitor for use by a user in association with an exercise apparatus and/or exercise procedures whereby a first electromyogram signal will be detected between said first live electrode and said first common electrode, and a second electromyogram signal, of substantially equal magnitude and

phase to said first electromyogram signal will be detected between said second live electrode and said second common electrode; so that, when said first electromyogram signal is applied to said first terminal and said second electromyogram signal is applied to said second terminal, the first and second electromyogram .signals will be subtracted from each other to produce a substantially zero electromyogram signal at the output of said difference amplifier, in combination with the remaining elements or features of the claimed invention.

Referring to claims 2-16, the claims are dependent on a confirmed independent claim, and are therefore also confirmed.

* * *

IN THE UNITED STATES PATENT AND TRADEMARK OFFICE
EX-PARTE REEXAMINATION

Control No.:	90/010,612 and 90/010,366 (Merged)
Patent No.:	5,337,753
Inventor:	Gregory Lekhtman
Title:	Heart Rate Monitor
TC/A.U.	3992
Examiner:	A. J. Kosowski

Docket No.:8185-82247-01 and LEK/151/US

Mail Stop Ex Parte Reexam
ATTN: Central Reexamination Unit
Commissioner for Patents
P.O. Box 1450
Alexandria, VA 22313-1450

Sir:

RESPONSE TO OFFICE ACTION IN REEXAMINATION CONTROL NUMBER 90/010,366

In response to the Official Action in the merged proceedings, dated February 5, 2010, Patent Owner (Owner) requests reconsideration and allowance for the reasons set forth in the accompanying Remarks.

There are no Amendments to the Specification, Claims, Abstract or Drawing.

Remarks begin on page 2.

* * *

REMARKS

Claims 1-4 stand rejected under 35 U.S.C. §103(a) as unpatentable by the combination of the Fujisaki patent in view of the De Vel technical paper. Applicant respectfully traverses this grounds for rejection.

The examiner recognizes that Fujisaki does not teach the critical aspect of claim 1, that a first electromyogram signal (EMG) will be detected between the first live electrode and the first common electrode, and a second EMG signal, substantially equal in magnitude and phase to the first EMG signal, will be detected between the second live electrode and the second common electrode so that, when the first EMG signal is applied to the first terminal of the difference amplifier and the second EMG signal is applied to the second terminal of the difference amplifier the first and second EMG signals will be subtracted from each other to produce a substantially zero EMG signal at the output of the difference amplifier.

With the present invention, the EMG waveforms generated by the body and manifested differently in each hand, are nevertheless detected as substantially equal by the *a priori* selection of the electrode configuration. Thus, when the EMG signals from the electrodes are applied to opposite polarity terminals of a difference amplifier with equal amplitude and phase, the EMG signals are subtracted from each

other to produce a zero level at the output of the difference amplifier.

Owner again emphasizes the important fact that ECG and EMG waveforms generated by a person are very different in how they are generated, where they are generated, how they travel through the body, their polarity, and the spatial dependence on their measurement. For monitoring heart rate from body surface sensors away from the heart, such as at hands on exercise equipment, ECG wave forms originate at the heart and travel a considerable distance to the hands, presenting an "R" wave amplitude of only about 100-1500 microvolts, along with AC noise and body hum in the microvolt range. The ECG signal is masked by strong EMG signals on the hands during exercise on the machines, and the spectrum of the EMG signal is close to the spectrum of the "R" wave of the ECG signal. Conventional thinking based on ambulatory heart rate measurement was to pass the detected wave forms through a difference amplifier to reduce noise and then capture the important part of the amplified ECG signal with a band pass filter. Although Fujisaki appreciated that the purpose of the difference amplifier was to reduce noise while amplifying the ECG waveform, there is no indication in Fujisaki that he appreciated the special problems posed by the strong and unequal EMG waveforms relative to the weak but equal and opposite ECG waveform as manifested in the hands. Under these circumstances, the use of a difference amplifier and bandpass filer is inefficient, because the filtering degrades the quality of the ECG signal and reduces the signal to a noise ratio of ECG/EMG.

Thus, EMG wave forms were known before the claimed invention, to be a source of interference in

the measurement of ECG. However, with an ECG sensor adjacent the heart as used in ambulatory heart rate monitoring, the ratio of ECG signal strength to EMG signal strength was high enough to more easily detect and count the "R" component of the ECG wave form. During exercise on machines, the EMG wave form on the palms of the hands increases 200-300 times from approximately 10 microvolts up to 2-5 millivolts, thereby overwhelming the ECG "R" wave amplitude of about 100-1500 microvolts with overlapping frequencies. EMG electrical potential is generated by muscle activity throughout the body but EMG potential on the skin is dominated by local muscle activity, and is not correlated with or commensurate to heartbeat

In Fujisaki, one electrode for each hand is active and the other is a common ground. With the device in use during exercise on a machine, the left active electrode would detect a faint ECG wave form traveling from the heart to the left palm, and a strong EMG wave form potential between the left active electrode and left ground. Similarly, the right active electrode would detect substantially the same faint ECG wave form but of opposite polarity and a strong EMG wave form potential between the right active electrode and the right ground. Whereas the ECG wave forms on the left and right palms at the machine handle are substantially equal and of opposite polarity, the EMG wave forms are of the same polarity but different on the left and right palms. Although the purpose of the difference amplifier of Fujisaki is to cancel input signals that are of the same potential, magnitude and phase, while amplifying signals that are of opposite polarity, magnitude and phase, the EMG signals on the two active electrodes cannot be cancelled because they are not of the same magni-

tude and phase. Fujisaki does amplify the ECG signal but merely hopes to cancel noise in the difference amplifier. In actuality, even if some portions of the EMG wave forms from the left and right hands cancel each other, the substantially higher power of the EMG wave forms at the surface of the palms leaves a considerable residual EMG signal that is still high compared to the amplified ECG signal. Because the EMG wave forms manifested at the left and right hands are not equal, the fact that the two active electrodes of the Fujisaki patent provide the input to the difference amplifier and the two inactive electrodes are connected to a common potential does not overcome this inequality in EMG contribution, so the EMG contributions are neither equal nor cancelled.

Owner submits that neither Fujisaki nor any prior art of record teaches or suggests that the EMG signal as detected from the palms of a human grasping electrodes while exercising, could be attenuated or cancelled by a difference amplifier to the extent of substantially zero such that a reliable ECG to EMG signal to noise ratio could be used for isolating the "R" peaks and thereby counting the heart pulses. Only in the heart rate monitor disclosed in Owner's patent are the detected right EMG and detected left EMG signals close enough in magnitude and phase to effectively cancel out in the difference amplifier.

The De Vel paper adds nothing to Fujisaki that would resemble Owner's claimed invention. The examiner relies on De Vel for teaching that ECG signals, especially when measured for a user under physical stress, contain noise including EMG artifacts, that the level of this noise depends on the geometric properties and location of the surface electrodes, and that it is common to use a front-end dif-

ference input interface for detecting ECG signals and minimizing noise. Owner has already admitted as much, and believes that this fact strengthens, rather than weakens the claimed invention. Notwithstanding the known contamination of ECG signals by EMG signals, no one previously conceived the elegant solution of configuration the electrodes *a priori* to substantially equalize the detected EMG from both hands on an exercise machine, such that the difference amplifier would indeed subtract them and thereby significantly increase the ECG signal to noise ratio. There is no disclosure in Fujisaki that would indicate he recognized the severity of the problem caused by the disparity in EMG signals as he would conventionally detect them at the left and right hands.

Even if one speculates that Fujisaki was aware of the magnitude of the EMG masking the ECG at the hands, one must presume that Fujisaki believed either (1) the EMG signals were substantially equal on the left and right hands, so regardless of electrode size, a symmetric configuration would result in cancellation of the EMG by the difference amplifier, or (2) the EMG signals were not equal and thus would not be cancelled in the difference amplifier but would somehow be filtered out after the difference amplifier.

If one of ordinary skill were aware of the De Vel paper and considered it as a candidate for improving the Fujisaki monitor, the modification would be made to Fujisaki only downstream of the difference amplifier. However, since the De Vel paper discloses a technique for improving ambulatory heart rate monitoring during increases in body activity, the resulting combination of Fujisaki and De Vel would not

necessarily improve Fujisaki. The wave forms shown in Figure 1 of De Vel were presumably derived from electrodes placed close to the heart, so the ECG signal to noise ratio is much higher than would be measurable at the palms. Ambulatory heart monitoring is achieved using surface electrodes on the torso, i.e., near the heart, where the ECG waveform is much stronger than at the hands and therefore the EMG waveform does not present the masking problem to the extent present at the hands. The text beneath Fig. 2 and in the description at the bottom of the third column confirm that the De Vel technique is concerned only with the bandpass filter after the difference amplifier to increase the signal to noise ratio, so there is no concern whatsoever in balancing the detection of the EMG waveforms or signals at the surface electrodes that contact the skin.

The examiner asserts that De Vel teaches one to adjust the geometric properties and locations of the electrodes in order to minimize noise, and thus one would be motivated to configure the electrodes of Fujisaki so as to balance the detected EMG. This line of thinking cannot be derived form De Vel. De Vel does not disclose that he kept repositioning the ECG electrodes on the subject until he obtained a maximum ECG to EMG signal ratio. How would he know when such a maximum occurred, given that the EMG and ECG overlap? The most that one might infer from his paper is that because the EMG and ECG overlap and one cannot determine from signal strength alone when the electrodes are ideally positioned, he provides an improved bandpass filter technique downstream of the difference amplifier. Moreover, even if one were to find "ideal" positions for the ECG electrodes, there is no suggestion that the EMG wave-

forms as detected at those positions would be of equal magnitude and phase.

De Vel could not teach what the examiner has asserted, unless De Vel first measured only EMG on the torso during exercise (such as with BioSig's EMG monitor) and kept relocating and/or changing the electrodes until he obtained a "zero" EMG at the difference amplifier. Only after this a *priori* set up based on EMG measurement alone, would he connect the heart rate monitoring circuit with ECG electrodes, difference amplifier, and bandpass filter in order to make heart rate measurements. This kind of EMG pre-balancing step (i.e., the present inventive concept) is not even hinted at in De Vel. Although he recognizes that the EMG signal is dependent on many variables, he simply does not teach how to adjust the geometric properties and locations of ambulatory ECG electrodes to cancel out EMG in the difference amplifier. There is no nexus between Fujisaki and De Vel by which the present inventive concept can be grafted onto Fujisaki.

De Vel discusses muscle noise spectrum associated with geometry and location of ambulatory ECG electrodes, and suggests that this noise is non-uniformly distributed. That is why he deals with it by designing a band pass filter. He never suggests balancing EMG from specific muscle groups. Even if De Vel thought about repositioning of the electrodes in order to obtain maximum ECG to EMG ratio, he would immediately realize that this could not be achieved by observing changes in the electrode signals as dependent on electrode locations and spacing. The electrode signals are a combination of overlapping ECG and EMG and the maximum of the ECG to EMG ratio cannot be determined without isolating

one or the other, i.e., as by the *a priori* balancing of the EMG. He simply deals with body muscle artifacts as a noise and teaches how to eliminate this noise with a band pass filter.

Accordingly, even if prior to 1992, one of ordinary skill with knowledge of the Fujisaki patent recognized the possibility of improving the Fujisaki monitor by using the techniques described in De Vel, such person's attention would be focused on the filtering after the difference amplifier of Fujisaki, not on balancing the EMG signal from the electrodes *a priori* such that equal EMG magnitude and phase would be delivered to the difference amplifier.

At the time of Fujisaki and De Vel no one considered balancing the detected EMG signals from the muscles on the palms of the hands. Even Owner's (Biosig's) prior techniques used a band pass filter after the difference amplifier. Fujisaki used a noise reduction filter after the difference amplifier, and De Vel used a band pass filter after the difference amplifier. Practitioners in the field at that time designed heart rate monitors for use during exercising based on techniques used in ambulatory heart rate monitoring, where the ECG generated by the heart alone was not overwhelmed by EMG generated by nearby muscle groups in the torso. For ambulatory monitoring, a difference amplifier and downstream filtering were somewhat satisfactory, but this technique was considerably degraded when ECG and EMG were detected in the hands. In the latter case, the ECG detected at the hands had traveled all the way from the heart and was very attenuated, whereas the EMG detected at the hands was from many muscle groups closer to the hands.

The present concept of balancing the detected EMG signal *a priori* at the electrodes elegantly and non-obviously solved a significant problem. The solution departed from standard thinking about using electrical components to amplify and filter contaminated ECG signals. By attacking the problem at the sensing electrode level rather than afterward, it permitted the use of a standard difference amplifier to achiever a stronger ECG to EMG signal to noise ratio, and use of filtering that focused on isolating the "R" peak of the ECG without interference from residual EMG that made it past the difference amplifier.

Owner refers to Mr. Lekhtman's Declaration Par. 48 and Exhibit 8 of the Owner's previously filed Response, regarding a contemporaneous technical paper comparing the accuracy of various heart rate monitors for exercise. These were primarily of the type having the sensor strapped to the heart. The author concluded that these were surprisingly inaccurate, and suspected that even with the sensors close to the heart, other locally manifested electrical activity (such as EMG) was the cause. This inaccuracy would be even greater for handle monitors (See Declaration Par. 53-54). That Owner solved this more difficult problem in striking fashion, is confirmed by the commercial success of the present invention, both in terms of the company's consulting and sales, licensing of third parties, and unauthorized copying (infringement) by Nautilus (the Requester) and others. (See Declaration Par. 11, 55, 70, and 96-99).

Claim 2 stands or falls with claim 1.

Claim 3 recites additionally patentable subject matter because no one previously recognized the ide-

al form of the electrodes as rings, for balancing detected EMG during exercise while also detecting ECG. Fujisaki's electrodes are rod shaped cylinders, each having a wide area that is not conducive to being uniformly grasped during exercise. With this configuration, the surface areas of contact between the hand and each detector will vary from person to person and for a given person will vary as the position of the hands changes during heavy exercise. The EMG waveform detected at the left and right hands cannot be substantially equal. In addition, as set forth in Declaration Par. 43, the large surface area of the electrodes as illustrated in Fujisaki confirms that Fujisaki was not aware of the principles of EMG detection relied on by the present inventor to make the invention claimed in the '753 patent. In particular, the use of large electrodes has the doubly detrimental effects of (a) magnifying the strength of the detected EMG relative to the detected ECG, thus reducing the ECG/EMG signal to noise ratio and (b) increasing the inequality and time dependent variance between left and right hand EMG resulting from continual changes in contact area between the hands and the electrodes during exercise. In contrast, the claimed ring detector electrodes are relatively narrow and spaced apart, and are very likely to be completely covered by (in contact over the entire detector area with) the hands throughout an exercise routine, regardless of shifting hand position on the handle.

Although the Biosig and E-Factor monitors utilized ring electrodes, neither of these has a left live ring and a left common ring, and a right live ring and a right common ring. When EMG is balanced *a priori*, the present claimed configuration simultaneously implements a four electrode EMG system and a

three electrode ECG system. As set forth in Declaration Par. 71, the EMG signals at the hands, in association with exercise, can only be cancelled in a difference amplifier, if the detectors are balanced *a priori*. Such balancing requires four EMG electrodes vs. three ECG electrodes. In relationship to a heart four electrodes represent three electrodes, because two common electrodes are connected. In relationship to EMG generators of the palms of the hands there are four electrodes, because each pair of electrodes measures the difference of potentials on each palm of the hand. If these potentials are not balanced, the result will be an amplified EMG signal. If the electrodes are balanced, the result will be cancellation of EMG signals.

None of the prior art suggests the combination of ring electrodes according to the recitation of claim 3, with the features recited in claim 1.

With respect to claim 4, applicant's band pass filer is directly connected to the difference amplifier, for the purpose of extracting the "R" portion of the amplified and isolated ECG waveform. Instead, Fujisaki provides a "noise filter" after the difference amplifier, without specifying how this filter operates. One must presume that this is intended to "filter out" unwanted waveforms, not isolate the "R" peak. Although these extraneous waveforms include EMG, Fujisaki does not specifically recognize EMG as requiring special treatment, and certainly does not even hint at balancing the EMG in any manner, let alone at the electrode detectors where grasped by the hands, i.e., at a point upstream of the difference amplifier.

The previous Biosig Insta-Pulse monitors utilized a band pass filter directly connected to the difference

amplifier to isolate the "R" wave, but suffered from degradation during exercise due to the passing of contaminating EMG waveforms through the difference amplifier. Fujisaki would not have incorporated features of the prior art Biosig monitors into his circuit (i.e., directly connecting a band pass filter to his unspecified "noise filter" between his difference amplifier and the pulse generating circuit) because that is the location of his noise filter. The previous Biosig monitors also employed a threshold to generate a square pulse to be counted.

However, none of the prior art suggests the combination of signal processing immediately following the difference amplifier per claim 4, the ring electrodes according to the recitation of claim 3, and the features recited in claim 1.

Dependent claims 5-8 and 10-16 were rejected under 35 U.S.C. §103 on the basis of the combined disclosures of Fujisaki, De Vel. "Biosig" and "E-Factor".

Claims 5, 6, 7, 8 and 10 stand or fall with claim 4.

Claims 11 and 12 stand or fall with claim 1.

Claim 13 is patentable for the same reasons as argued for claim 3.

Claim 14 is patentable for the same reasons as argued for claim 14.

Claims 15 and 16 stand or fall with claim 14.

Although the Hawkins patent cited by the Requester was not relied on to reject any claims, Owner notes that the equipment described in Hawkins does not monitor heart rate during exercise (see col. 7 lines 4-44) and in any event uses only two electrodes.

It is designed to evaluate the heart recovery rate after exercise. The user does not even touch the electrodes during exercise, only before and after. Furthermore, although rings are shown, there is no disclosure as to whether the left pair are active and common, and the right pair are active and common. In fact, the description refers to only two electrodes, 38 and 40, which generate two signals (see col. 4 lines 12-20). Finally, there is no recognition or discussion of handling noise, especially EMG, presumably because EMG is far less of a problem when the user simply holds the handles after exercising. No one in the art would find anything in Hawkins to modify Fujisaki.

For the foregoing reasons, applicant believes that all pending claims are patentable.

Respectfully submitted,

GREGORY LEKHTMAN

By: s/

L. James Ristas
Registration No. 28,663
Alix, Yale & Ristas, LLP
Attorney for Applicant

Date: March 31, 2010
750 Main Street - Suite 1400
Hartford, CT 06103-2721
(860) 527-9211

Our Ref: LEK/151/US
LJR/io

IN THE UNITED STATES PATENT AND TRADEMARK OFFICE
EX-PARTE REEXAMINATION

Application No.:	90/010,366
Inventor:	Gregory Lekhtman
Issued:	08/16/1994
Title:	Heart Rate Monitor
TC/A.U.	3992
Examiner:	A. J. Kosowski
Docket No.:	8185-82247-01 and LEK/151/US

Mail Stop Ex Parte Reexam
ATTN: Central Reexamination Unit
Commissioner for Patents
P.O. Box 1450
Alexandria, VA 22313-1450

Sir:

RESPONSE TO OFFICE ACTION IN REEXAMINATION

In response to the Official Action dated April 13, 2009, Applicant requests reconsideration without any amendments in view of the following Remarks.

* * *

REMARKS

Introduction

This Response contains an extensive technical background, and a detailed account of the development of the claimed invention as an improvement relative to the prior art, so that the examiner will gain a full understanding of the relevant facts.

Before 1992, Biosig Instruments Inc. (Biosig) commercialized two baton-type heart rate monitors which, for convenience, will be referred to as the First Insta-Pulse 105 and the Second Insta-Pulse 105 monitors. However, such monitors did not eliminate the effects of muscle artifact which is brought about when a user, in exercising, moves his arm or squeezes the monitor with his fingers. As electromyogram signals (EMG) from muscle activity are in the same frequency range as electrocardiogram signals (ECG) from the heart, the presence of these EMG signals will affect the accuracy of the measured heart rate.

In accordance with the present invention, the EMG signals of the hands of the users are applied to opposite polarity terminals of a difference amplifier, whereby substantially equal amplitude and phase EMG signals are subtracted from each other to produce a zero level signal at the output of the differential amplifier.

Claim 1 captures the essence of this inventive feature in reciting,

- said elongate member is held by said user with one hand of the user on said first half contacting said first live electrode and said

first common electrode, and with the other hand of the user on said second half contacting said second live electrode and said second common electrode

- whereby, a first electromyogram signal will be detected between said first live electrode and said first common electrode, and a second electromyogram signal, of *substantially equal magnitude and phase to said first electromyogram signal will be detected between said second live electrode and said second common electrode*
- so that, when said first electromyogram signal is applied to said first terminal and said second electromyogram signal is applied to said second terminal, *the first and second electromyogram signals will be subtracted from each other to produce a substantially zero electromyogram signal at the output of said difference amplifier.*

Overview of Rejections and Traversal

The basic reference relied upon is U.S. 4,444,200 (Fujisaki) as anticipating claims 1-3 under 35 USC §102 and rendering claim 4 obvious under 35 USC §103. Claims 5-8 and 10-16 stand rejected under 35 USC §103 based on Fujisaki in combination with the secondary references of Applicant's own specimen from U.S. Trademark No. 1,156,243 and Applicant's contribution to a chapter in the "E-Factor" book.

All grounds for rejection are traversed, for the reasons that (1) Fujisaki fails to disclose, teach, suggest or inherently provide two significant features recited in claim 1, the sole independent claim, and (2) the claimed invention cannot reasonably be de-

rived from any single or combination of references as of the 1992 filing date of the application. With respect to reason (2), the Requester has misunderstood the configuration and operation of the devices depicted and discussed in the trademark specimen and the book chapter, so claim 1 is patentable under 35 USC §103 even if Examiner were to consider combining one or both of these with Fujisaki.

Applicant will address all grounds of rejection in detail, with factual support from the Declaration of the inventor, Mr. Gregory Lekhtman. His Declaration is based on his expertise and firsthand knowledge and belief regarding heart rate monitor products he designed and commercialized, as well as tests he performed to show the effects of detector configuration on EMG measured in the palms of the hands. Moreover, he is familiar with tests performed by Dr. Henrietta Galiana and the sworn statements in her Expert Report prepared in the course of a patent infringement suit filed by Biosig, the owner of the patent under reexamination, against Nautilus, the Requestor.

The Declaration contains 140 numbered statements, referring to 14 Exhibits, one of which (# 11) is organized around 34 Pictures. Reference in this Response to statements in Mr. Lekhtman's Declaration will be indicated as "GLDecl. Par. #" and reference to the Exhibits or Pictures will be indicated as "GLDecl. Ex. #" or "GLDecl Pic. #".

Mr. Lekhtman Is an Expert and Biosig Is a Leader in the Relevant Field

Mr. Lekhtman has advanced degrees in neurophysiology and neurocybernetics and worked in the field of medical electronics as a researcher and a con-

sultant before incorporating Biosig Instruments Inc. in 1983. He is the president of this corporation (hereinafter, "Biosig"), and a summary of the company's current products and services appears in GLDecl. Ex. #1. Since the founding of the company, he has been responsible for all R&D, technical performance, manufacturing and marketing activities. (GLDecl. Par. #1-7)

He is the named inventor or co-inventor of nine U.S. patents and numerous foreign patents, and under his direction the company has commercialized products covered by these patents. GLDecl. Ex. # 2. Since prior to 1990, Biosig has been a leader in the development of biometric devices attached to or in contact with human skin, especially in conjunction with exercise equipment. GLDecl. Par. #8, 9)

The following companies have engaged his services through Biosig, as a consultant to their development of biometric devices and techniques: The Sharper Image, Sony, Nordic Track, Polar, StarTrac by Unisen, Cybex, Stair Master, Shwinn, Nautilus, Weider, King I Meter, Kettler and many others. (GLDecl. Par. #10)

Biosig has supplied companies including Star Trac and Cybex for many years with more than one hundred thousand EMG/ECG monitors according to the invention claimed in the '753 patent. These companies are leaders in the world of cardio-fitness machines. Today Cybex is licensed by Biosig for EMG/ECG technology under U.S. Patent 5,337,753. (GLDecl. Par. #11)

Since 1970 he has contributed to many publications with articles on biometric devices and techniques and has received awards or recognition for his

contributions to the study of such biometric devices and techniques and other fitness related inventions from invention conventions in the USA, Japan, Brussels, Geneva, Germany, Argentina and many diplomas. (GLDecl. Par. #12, 13 - GLDecl. Ex. # 3)

As a consequence of this background, he is an expert in the Field of biosignal acquisition and processing (understanding how the human body generates and transmits electrical signals, and how to detect, process and record those signals), especially the specific sub-fields of electrocardiography, electromyography, and electroencephalography, which all concern measuring and analyzing electrical waveforms produced by the human body as manifested on skin. (GLDecl. Par. #14)

Technical Background

The heart achieves its pumping action by rapid and synchronized depolarization starting in the atria (SA node) and spreading to the ventricles (via highly compact and conductive fibers). Because the heart is not aligned in the center of the body and has a tilt leftward from apex to bottom, ECG potentials have opposite polarity, when observed on opposite sides of a line tilted from left shoulder to right thorax/waist. Thus ECG signals will have opposite polarity in the two hands. (GLDecl. Par. #23)

Depending on the site, ECG measured with surface electrodes will have amplitudes ranging from 1mV to 10mV with a bandwidth of 0.05-100Hz for a standard 12-lead ECG used in medical diagnostics. (GLDecl. Par. #24)

A schematic of the portions of an ECG waveform is shown in GLDecl. Ex. #6. Conventionally, the different portions of the ECG wave are identified by let-

ters. The key phases of an ECG waveform are labeled as the P, QRS and T waves. These are related to the state of activation in different parts of the heart, and are an integral part of the ECG, as opposed to noise. (GLDecl. Par. #25)

The entire waveform is not needed to achieve high accuracy in all ECG applications. For example for simple monitoring of heart rate or pulse rate, only the "R" peak of the QRS complex is needed, since each R peak corresponds to one heart beat. Therefore, while clinical applications require high fidelity in the range of 0.05-100 Hz, a typical heart rate monitor only passes frequencies around 17 Hz with a strong resonance peak (Q factor). In other words, heart rate monitors ignore most of the heart rate signal other than an area around the peak of the R wave. (GLDecl. Par. #26)

All skeletal muscles, including hand muscles, emit their own electrical signals (EMG). As GLDecl. Ex. #7 illustrates, the EMG signal can completely mask the peak of the R wave, making it difficult to differentiate the R wave peaks from the EMG noise. (GLDecl. Par. #27)

The significance of noise in an electronic signal is defined in terms of the signal under measurement. In GLDecl. Ex. #7, since the EMG noise masks the ECG signal under measurement, the noise is considered significant. When EMG noise is so much lower than the R-wave peaks that the noise does not interfere with the ability of a circuit to detect the R wave peaks, persons in the art commonly refer to the noise as "substantially zero." (GLDecl. Par. #28)

For monitoring heart rate from sensors in a handle, whether the subject is at rest or exercising, the

ECG waveform originates at the heart and travels a considerable distance to the hands, presenting an "R" wave amplitude of only about 100 - 1500 microvolt, along with AC noise and body hum in the microvolt range. (GLDecl. Par. #29)

For monitoring heart rate from sensors in a handle, the raw signal as detected at the hands and delivered to a differential amplifier, is a composite of the ECG waveform, hum, noise and EMG. (GLDecl. Par. #30)

The ECG signal is masked by strong EMG signals on the hands. Since the spectrum of the EMG signal is close to the spectrum of the "R" wave of the ECG, conventional practice was and still is to provide an electronic filtering of EMG signals. This is inefficient, because the filtering degrades the quality of the ECG signal and reduces the signal to noise ratio of ECG/EMG. (GLDecl. Par. #31)

EMG electrical potential is generated by muscle activity throughout the body but EMG potential on the skin is dominated by local muscle activity, and is not correlated with or commensurate to heartbeat. EMG waveforms were known to be a source of interference in the measurement of ECG. However, with an ECG sensor adjacent the heart, the ratio of ECG signals strength to EMG signal strength was high enough to easily detect and count the "R" component of the ECG waveform. (GLDecl. Par. #32, 33)

In the measurement of heart rate using ECG detected in the palms, each active sensor is intended to detect a waveform from a single generator, the heart. In contrast, for the measurements of EMG two generators are involved, one is the left palm and the other the right palm. (GLDecl. Par. #34)

Monitoring heart rate from sensors on the hands presented a major problem because the ECG waveform diminishes during travel from the heart to the palm of the hands to the extent that the local EMG waveform in the palms overwhelmed the ECG waveform. This was especially a problem because the EMG waveform but not the ECG waveform increases in amplitude during exercise, and the ECG and EMG frequencies overlap. (GLDecl. Par. #35)

During exercise, the EMG waveform on the palm of the hands increases 200-300 times from approximately 10 microvolt up to 2-5 millivolt, thereby overwhelming the ECG "R" wave amplitude of about 100-1500 microvolt with overlapping frequencies. (GLDecl. Par. #36)

Rejection Under 35 U.S.C. §102

(a) Fujisaki Does Not Disclose Cancellation of EMG Waveforms Detected on the Left and Right Hands

Fujisaki shows a baton or handle type heart rate monitor having an active and an inactive electrode for each hand, with the inactive electrodes commonly connected and the active electrodes providing the inputs to a differential amplifier upstream of a filtering and counting circuit.

The rejection of claim 1 (and various dependent claims) under 35 U.S.C. §102 as anticipated by the disclosure of Fujisaki fails to take into consideration the two essential and significant features recited in claim 1 as indicated by the italicized phrases in the bullet points:

- whereby, a first electromyogram signal will be detected between said first live electrode and said first common electrode, and a se-

cond electromyogram signal, *of substantially equal magnitude and phase to said first electromyogram signal will be detected between said second live electrode and said second common electrode*

- so that, when said first electromyogram signal is applied to said first terminal and said second electromyogram signal is applied to said second terminal, *the first and second electromyogram signals will be subtracted from each other to produce a substantially zero electromyogram signal at the output of said difference amplifier.*

First, the EMG signal detected on each of the active electrodes for the left and right hands, respectively, will be of substantially equal magnitude and phase, and second, these detected EMG signals are delivered to a difference amplifier in which the detected EMG signals are subtracted and thus cancel each other. In this manner, the amplified waveform that is passed from the difference amplifier to the counting circuit is not influenced substantially by the EMG waveforms that were originally generated by the palms of the hands.

Fujisaki does not even recognize the significance of the EMG contribution to the overall waveform detected at each hand. Such recognition cannot be inferred simply because Fujisaki discloses the use of a differential amplifier. Use of a difference amplifier was well known in the art to remove body hum and other electromagnetic influences originating outside the body. This hum and external noise are of a systematic character such as the 60 cycle electrical power for lighting, entertainment units, powered exercise equipment, and the like, and induced waveform

which these original sources produce as hum in the body. Providing Fujisaki's large, symmetrically placed left and right active electrodes at the inputs of the difference amplifier, and left and right inactive electrodes connected to a common ground or the same reference voltage as the difference amplifier, may cancel out such systematic waveforms, but will not produce the EMG cancellation effect as recited in applicant's claims. (GLDecl. Par. #42-47, 74)

The disclosure in Fujisaki of a simple block diagram that resembles the block diagram of the subject application, does not inherently disclose the claimed invention. It is the Examiner's burden to show that any circuit having the electrode and amplifier configuration of Fujisaki would cancel EMG from the hands of an exercising subject, or that Fujisaki discloses in the description how one of ordinary skill can adapt or tune the circuit to cancel EMG signals in the hands. This burden cannot be met.

First, Fujisaki does not recognize the effect of the EMG signal on detecting the portion of the ECG waveform to be used for counting heart pulses. Second, Fujisaki does not disclose or even hint at whether the differential amplifier cancels the EMG contributions from each hand. Third, extensive testing has shown that the type of circuit and electrodes disclosed by Fujisaki increase the amplitude of the detected EMG during exercise and thereby adversely affect the ECG signal from which the heart rate counting is derived.

(b) Operation and Teachings of the Device Disclosed in Fujisaki

The '200 patent describes a handle for measuring heart rate while exercising, with two large and close-

ly spaced detector electrodes for each hand. One electrode for each hand is active and the other is a common ground. With the device in use during exercise, the left active electrode would detect a faint ECG waveform traveling from the heart to the left palm, and a strong EMG waveform potential between the left active and left ground. Similarly, the right active electrode would detect substantially the same faint ECG waveform but of opposite polarity and a strong EMG waveform potential between the right active and right ground. (GLDecl. Par. #38, 39)

Whereas the ECG waveforms on the left and right palms are substantially equal and of opposite polarity, the EMG waveforms are of the same polarity but different on the left and right palms. EMG waveforms on the left and right hands may be influenced by common sources of electrical activity, but it is well known that the overall potential at the skin surface is different for the left and right hands. (GLDecl. Par. #40)

The circuit of the '200 patent and the circuit of the '753 patent will detect separate EMG waveforms on each hand, as an electrical potential between two distinct areas (active detector area and grounded detector area) in contact with a respective palm. The strength amplitude or magnitude) of an EMG measurement is proportional to the space between the active and ground electrode and the size of the electrodes. (GLDecl. Par. #41)

Upon seeing the figures depicting the detector electrodes in the '200 patent, any knowledgeable person in the Field as of 1992 would conclude that any detected EMG on the right and left hands would be unequal and thus could not be cancelled by the differential amplifier. Furthermore, as of 1992 neither

the '200 patent or any other source of information about heart rate monitoring disclosed, taught, or suggested that EMG should or could be attenuated or cancelled by a differential amplifier that amplified the ECG signal. (GLDecl. Par. #42)

The large surface area of the electrodes as illustrated in the '200 patent confirms that the inventor Fujisaki was not aware of the principles of EMG detection Mr. Lekhtman relied on to make the invention claimed in the '753 patent. In particular, the use of large electrodes has the doubly detrimental effects of (a) magnifying the strength of the detected EMG relative to the detected ECG, thus reducing the ECG/EMG signal to noise ratio and (b) increasing the inequality and time dependent variance between left and right hand EMG resulting from continual changes in contact area between the hands and the electrodes during exercise. (GLDecl. Par. #43)

The circuit disclosed in the '200 patent is functionally equivalent to the circuits of many physiological monitors, including the First Insta-Pulse 105 product, and as used for heart rate monitoring is simply an ECG type of a monitor with two active electrodes and one large inactive electrode formed by the common connection of the left and right inactive electrodes. The '200 circuit includes a filter after the differential amplifier, which would be necessary to reduce the influence of the difference between left and right hand EMG waveforms that would be passed through the differential amplifier. (GLDecl. Par. #44)

The monitor disclosed in the '753 patent is an EMG/ECG monitor and has two electrodes to monitor ECG, two electrodes to monitor left EMG, and two electrodes to monitor right EMG in such a way

that the left and right EMG signals are close enough in magnitude and phase to cancel out in the differential amplifier. (GLDecl. Par. #45)

The monitor in '200 patent cannot be presumed to function as claimed in the '753 patent. Many circuits for electrophysiology look similar, but perform different functions. (GLDecl. Par. #46)

Given that the EMG waveforms from the left and right hands are not equal, the fact that the two active electrodes in the '200 patent provide the input to the differential amplifier and the two inactive electrodes are connected to a common potential does not overcome this inequality in EMG contribution, so the EMG contributions are neither equal nor cancelled. (GLDecl. Par. #47)

(c) Biosig's Insta-Pulse Monitors

The claimed invention was incorporated into Biosig's product line as an improved version of two previous Insta-Pulse 105 models. The original and first modified version are herein referred to as the First Insta-Pulse 105 and Second Insta-Pulse 105, respectively, whereas the version which incorporates the claimed invention will be referred to as the Third Insta-Pulse 105.

The First Insta-Pulse 105 monitor had three detector electrodes (one active for each hand and one inactive for one hand), and the Second Insta-Pulse 105 monitor had four detector electrodes (two active for one hand and one active and one inactive for the other hand). The First Insta-Pulse 105 monitor is illustrated in the Biosig trademark specimen and the Second Insta-Pulse 105 is illustrated in the E-Factor book. (GLDecl. Par. #19, 20)

Neither of these Biosig monitors had one active and one inactive detector for each hand, as disclosed by Fujisaki and as required by applicant's claim 1. Both did, however, have a differential amplifier for the same purpose as was known in the art including Fujisaki, i.e., to reduce systematic noise such as AC from equipment and body hum, but without regard to or effect of cancelling or compensating for detected EMG. (GLDecl. Par. #21)

The cancellation of the EMG in the Third Insta-Pulse 105 monitor was achieved by configuring the sensors such that EMG signals as detected from the left and right hand would be of substantially equal amplitude and phase, even though the EMG waveforms at the palm skin surface were not substantially equal at the left and right hands. (GLDecl. Par. #66)

(d) Claim 1 of the '753 Patent Differentiates from the '200 Patent

The EMG signals at the hands, in association with exercise, can only be cancelled in a differential amplifier, if the detectors are balanced *a priori*. Such balancing requires four EMG electrodes vs. three ECG electrodes. With respect to a heart signal (ECG) two active and two connected inactive electrodes function as three electrodes. With respect to EMG generators of the palms of the hands the four electrodes must be configured to function as two pairs, each measuring the difference of potentials on each palm of the hand. If these potentials are not balanced, the result will be an amplified EMG signal. If the electrodes are balanced the result will be cancellation of EMG signals. The '200 patent does not even mention EMG so there is no basis for anyone to learn that as a precondition to providing the circuit shown

in the '200 patent, one must through trial and error configure the electrodes such that the inherently unequal EMG waveforms are equalized as detected on the left and right hands. (GLDecl. Par. #71)

A subject at rest while holding the handle of the '200 patent would produce ECG waveforms of different polarity on each hand, in a range of 100 to 500 microvolt. EMG waveform contributions at the left and right detectors would be in the range of 2 millivolt on average but could be as high as 5 millivolt in cases with very strong hands. (GLDecl. Par. #72)

During exercise, the detector configuration of the '200 patent will not eliminate EMG but rather amplify it. That is why it will not work on exercise machines for anyone. (GLDecl. Par. #73)

None of the successful implementations of the inventive concept of the '753 patent has a detector configuration as shown in the '200 patent. (GLDecl. Par. #37, 75)

The detector configuration for each hand according to the '200 patent has a wide active detector closely spaced from a wide inactive detector. With this configuration, the surface areas of contact between the hand and each detector will vary from person to person and for a given person will vary as the position of the hands changes during heavy exercise. The EMG waveform detected at the left and right hands cannot be substantially equal. (GLDecl. Par. #76)

The inventor on the '200 patent likely believed that the large electrode detectors would increase the amplitudes of the ECG signals and thus improve the ability of the downstream filter and counting circuit to discriminate and count heart pulses, but in fact,

the larger the detector the more the ECG signal is masked by the EMG signal during exercise. Also, since EMG signals are commensurate with the contact area with the skin, use of large electrodes would result in varying the contact area and thus detected EMG as the hands shift on the handle during exercise. (GLDecl. Par. #77)

In the illustrated embodiment of '753 patent, the detector electrodes are relatively narrow and spaced apart, and are very likely to be completely covered by (in contact over the entire detector area with) the hands throughout an exercise routine, regardless of shifting hand position on the handle. (GLDecl. Par. #78)

Although the handle of the '200 patent had two electrode detectors for each hand, the configuration differs from that illustrated in the '753 patent. In the '200 patent, the space between electrodes is narrower than the width of each electrode, whereas in the '753 patent the space between electrodes is wider than the width of each electrode. The drawings of the electrodes in the '753 patent teach that the space relationship of the electrodes was taken into consideration to achieve equal EMG signals. (GLDecl. Par. #79)

Claim 1 of the '753 patent recites in part that...*a first electromyogram signal will be detected...and a second electromyogram signal, of substantially equal phase and magnitude to said first electromyogram signal will be detected*...so that when these first and second signals are applied to the first and second terminals of the difference amplifier...*the first and second electromyogram signals will be subtracted from each other to produce a substantially zero*

electromyogram signal at the output of the difference amplifier...".

The device of the '200 patent does not satisfy the underlined features of claim 1 of the '753 patent. The passage quoted from claim 1 defining the inventive concept, was in claim 1 as originally filed, and was not known or obvious to others at the time the invention had been made. Subsequent amendments to claim 1 did not modify or limit the quoted language defining the inventive concept, but instead were added because the claim was directed to a heart rate monitor and so other, conventional aspects of a heart rate monitor were added to claim 1, i.e., detecting and processing of ECG to produce a heart rate output. (GLDecl. Par. #82-84)

(e) One of ordinary skill in the art would understand the claimed differences relative to the prior art

This pre-balancing is not disclosed or derivable from the '200 patent, and is the unanticipated and non-obvious key to the inventive concept; but once disclosed according to the '753 patent, it can be readily implemented from the known, routine knowledge and practices regarding measurement of EMG. (GLDecl. Par. #80)

Claim 1 specifies the required electrical characteristics of the active electrodes. Since it was common knowledge as of 1992 that EMG potentials on each hand would be different and thus any detected EMG signals using conventional measurement techniques from the left and right hands would be different, one of ordinary skill in the relevant field would readily understand from the disclosure in the '753 patent, that the inventive concept and the advance

relative to the state of the art, was that the detectors must be configured *a priori* to produce equal EMG from the left and right hands. (GLDecl. Par. #82)

This equalization or balancing could be easily achieved by using known EMG detectors that employed a high signal to noise ratio of EMG to ECG. The EMG signals detected on the left and right palms are delivered to a differential amplifier in the EMG measuring device, and the available design variables are adjusted until the differential output is minimized, i.e., close to zero. (GLDecl. Par. #67, 85-94)

In commercial practice, the procedure of balancing is performed *a priori* in a prototype lab or factory, as follows (GLDecl. Par. #68):

a. The type of exercise machine is analyzed with regard to comfortable positioning of the hands on a proposed handle size and placement.

b. Several configurations of the electrodes on the handle are compared for the best performance (minimize EMG differential, such as with the Biosig Model 501 EMG System)

c. When the optimum configuration of the spacing, size, shape and materials for the size of electrodes is found to produce a balanced detection of EMG, the handle is connected to the proposed final heart rate monitoring circuit.

d. The handle with final circuitry is tested to confirm that the ECG to EMG signal ratio is sufficient to assure the heart rate, as determined from the ECG with EMG-compensation of the detectors, is within the desired tolerance.

The size, shape, material and spacing of the active electrodes cannot be standardized for all exercise handles. Analyses must be made on a machine- specific basis to find best ECG/EMG ratio for each machine. That is why all the infringers are using different configurations of the EMG balanced electrodes on their equipment. (GLDecl. Par. #69)

(f) Testing of the Fujisaki Circuit Confirmed Unsatisfactory Imbalance In Detected EMG Signals and Testing of Circuits According to the Invention Confirmed Satisfactory Balance in the EMG

GLDecl. Ex. #11 is a report Mr. Lekhtman prepared based on testing he performed on various configurations of electrodes on a simulated exercise machine handle, based on the First and Second Insta-Pulse 105 products, the device disclosed in the '200 patent, and devices based on the disclosure in the 753 patent. (GLDecl. Par. #100)

a. With the handle simply held, a three electrode ECG system (400 microvolt) works better than an unbalanced four electrode system (450 microvolt) (GLDecl. Pics. #1-3)

b. With the handle grasped, an ECG monitor with one inactive electrode (550 microvolt) performs better than an ECG monitor with two inactive unbalanced electrodes (1150 microvolt). (GLDecl. Pics. #4-5)

c. With the handle grasped, the four electrode EMG balanced system according to the '753 patent (450 microvolt) performs much better that a four electrode unbalanced system (1200 microvolt) (GLDecl. Pics. #6-10)

d. A handle configured according to the '200 patent produces 950 microvolt EMG output when simply held symmetrically and 1200 microvolt output when grasped symmetrically. (GLDecl. Pics. #11-13)

e. A handle configured according to the '200 patent produces 1000 microvolt when grasped asymmetrically, less than when grasped symmetrically, thereby proving that the four electrode configuration taught by the '200 patent cannot be EMG balanced. (GLDecl. Pic. #14)

f. The circuit of the '200 functions as a three electrode ECG system and Fujisaki evidently did not realize that by providing the fourth electrode the EMG effect on the ECG signal would be worse (GLDecl. Pics. #15-17), so this cannot anticipate or render obvious the invention claimed in the '753 patent.

g. The Third Insta-Pulse 105 EMG product of Biosig that incorporates the invention of the '753 patent, produces much lower EMG output from the differential amplifier when held or grasped, than any of the earlier Insta-Pulse or model of the '200 patent. (GLDecl. Pics. #18-20)

Nautilus and Unisen (Star Trac) used the teachings of the '753 patent in designing EMG-balanced detectors for commercialized exercise equipment. (GLDecl. Par. #101) (GLDecl. Pics. #21-23)

Close inspection shows differences in electrode configurations between EMG balanced and unbalanced, for a given model of exercise equipment. (GLDecl. Par. #102) (GLDecl. Pics. #24 -26).

To EMG balance a configuration of detectors for a given end use, reconfigurable bench versions or

prototypes are incrementally adjusted until the EMG difference between left and right is minimized. (GLDecl. Par. #103) (GLDecl. Pics. #27-29). One cannot expect the circuit shown in the '200 patent to provide EMG balanced detector electrodes or teach this concept to one of ordinary skill because care must be taken to configure the system so that the differential EMG is low enough to produce substantially zero EMG contribution at the output of the differential amplifier.

(GLDecl. Par. #104) (GLDecl. Pic. #30) shows two baton type heart rate monitors having the same overall dimensions. The (Third) Insta-Pulse 105 monitor is sold by Biosig and the Polar monitor was produced by Biosig for Polar according to Polar's requirements. It can be seen that to achieve optimum ECG/EMG ratio according to the '753 patent, slightly different detector electrode spacing were required.

(GLDecl. Par. #105) (GLDecl. Pics. #31 and 32) show that the four-electrode monitor illustrated in the E-Factor book has smaller spacing between the left electrodes relative to the larger spacing between the right electrodes, whereas the electrode spacing shown in Fig. 2 of the '753 patent is shown as substantially uniform.

(GLDecl. Par. #106) (GLDecl. Pic. #33) shows the circuit diagram for the detectors on the monitor shown in the E-Factor book, which is different from the circuit of the '200 patent and the circuit of the '753 patent.

(GLDecl. Par. #107) (GLDecl. Pic. #34) was presented by the Requestor as somehow relevant to the reexamination, but it only shows connections for

monitoring the "R" wave of the ECG, without showing how to detect the EMG on each hand.

(g) Other Tests Confirm That the Attenuated Differential EMG According to the Claimed Invention Results In a Substantially Zero EMG Influence on ECG Output of a Differential Bioamplifier

Dr. Henrietta Galiana is the Chairman of the Department of Biomedical Engineering at McGill University and prepared an Expert Report for Biosig in the pending infringement action by Biosig against Nautilus. Dr. Galiana performed tests on a laboratory mock-up of the device as shown in Figures 1 and 2 of the '753 patent. (GLDecl. Par. #108, 109)

GLDecl. Ex. #11 focused on the difference in EMG voltage between the left and right hands as generated on a laboratory mock-up having various configurations of detector electrodes, measured by a dedicated EMG meter, whereas Dr. Galiana's tests focused on the overall waveforms input to and output from a differential bioamplifier connected to a mock-up of a device as shown in Figures 1 and 2 of the '753 patent. This mock-up was configured to resemble the Third Insta-Pulse 105 monitor. (GLDecl. Par. #110, 111)

Dr. Galiana stated that there can be no doubt that the '753 patent describes an operative invention. She directly tested the circuit described in the '753 patent and demonstrated in data ... that two detected EMG signals on opposite hands can indeed have substantially the same amplitude and phase, and that a difference amplifier will then reduce those EMG signals to substantially zero. (GLDecl. Par. #113)

While an individual muscle fiber's electrical signal might be random, a skin contact sensor such as described in the '753 patent, can aggregate a multitude of electrical signals emitted by the muscle fibers that lie beneath the skin in the vicinity of the contact sensor. In addition, the contact sensor will react differently depending on its interconnections with an electronic circuit. The aggregate EMG signal detected by each of the surface electrodes on a subject's hands must be substantially the same in both amplitude and phase, in part due to the fact that the invention connects both hands to the same point of common potential and uses closely spaced electrodes under each hand. As a result, the EMG signals from two hands become substantially correlated and can be eliminated by a differential amplifier, just as the '753 patent describes. Her testing demonstrated that the invention works precisely as the '753 patent explains, and that the '753 patent contains a written description of the invention and the manner of making it to a clear level of detail sufficient to have enabled a person of ordinary skill in the art in 1992 to make the invention without any material experimentation required. (GLDecl. Par. #114)

In referring to the components of signals used as inputs of differential amplifiers, the term "in-phase" is often used to describe whether the amplitude of two signals is the same (or nearly-so), while synchronized in their zero-crossings. This term is indeed relevant in describing the timing of peaks and troughs between pure sinusoidal signals. For more complex signals (such as ECG and EMG), the term "in-phase" is accepted in the art as referring to two signals that have a synchrony in the times of their zero-crossing with amplitudes of the same polarity. "Out-of-phase" describes two signals with synchro-

nized zero crossings but opposite polarity. This more general definition is accepted by persons of ordinary skill in the art to characterize or quantify similarities/dissimilarities in either pairs of sine waves, or pairs of more complex noisy signals (e.g., ECG and EMG). (GLDecl. Par. #115)

Consider two signals applied to the signal input ports of a difference amplifier:

$$\text{Signal 1} = m1 + n \qquad \text{Signal 2} = m2 + n$$

where n represents noise common to both signals and where m1 is the opposite of m2 (m1 = -m2). Because m1 and m2 are equal and opposite signs, they both reach zero amplitude at the same time (timings of their zero crossings are the same) but they do so moving in opposite directions. As a result, the signal pair is referred to as being out of phase. By definition, a differential amplifier is designed to amplify the difference (by a factor A) and reduce the sum of the inputs by a factor B, much smaller than A. In other words, the difference between m1 and m2 will be greatly amplified by a factor A. (GLDecl. Par. #116)

On the other hand, the common signal n will not be amplified and instead pass through the amplifier with a gain B much smaller than A (usually B = 1). In order to further eliminate noise "n", that noise must also be carried on a reference electrode connected to what is referred to as a "common reference port" on the differential amplifier. Using the common reference signal, the differential amplifier compares the input signals to the reference signal, and substantially rejects the noise component to the extent they are common. Because differential amplifiers process signals based on the instantaneous ampli-

tude (reflecting the polarity, timing of zero crossing, and magnitude), and not necessarily the more limited characteristics of a sine wave, it is improper in the context of differential amplifiers, to limit the definition of phase to that used in sine waves. Rather, a more general definition of phase magnitude is commonly understood by persons of ordinary skill in the art to apply to the operation of differential amplifiers. (GLDecl. Par. #117)

While it is common to speak of the "rejection" or "elimination" of noise by a differential amplifier, persons of ordinary skill in the art understand that complete elimination is never achievable due to physical limits in electronic components. Shared noise (i.e., common mode) will always 'leak' through on the output of any differential amplifier, and this is characterized by what is referred to in the art as the common-mode-rejection-ratio (CMRR). (GLDecl. Par. #118)

The CMRR is defined as the ratio of the difference gain over the sum gain, (or A/B above). Typical bio-applications require a CMRR of 10,000-100,000; while the common mode is typically of gain 1. With such high CMMR, one can see why one skilled-in-the-art refers to a 'substantially zero' response to common signals on the two terminals, simply because it is substantially smaller than the response to opposite signals on the two terminals. This does not and is never expected to mean that the noise component will be attenuated to perfect zero by the differential amplifier. (GLDecl. Par. #119)

As a result, amplification of desired signals, and relative attenuation (rejection) of undesired signals is dependent on appropriate selection of recording sites and circuit connections. Desired signal compo-

nents should appear with opposite polarity on the two differential amplifier input ports, while noise (i.e., undesired signals) should appear of substantially equal magnitude (amplitude) and phase on the same two input ports, and on the common reference port. The location of the reference electrode and its connection to the amplifier circuit will therefore also influence the nature of common signals on the two input signals amendable to cancellation. (GLDecl. Par. #120)

Someone of ordinary skill in the art of biosignal acquisition would recognize differential amplifier 23 in the '753 patent as a bioamplifier. (GLDecl. Par. #121)

In 1992, a person of ordinary skill in the art of biosignal acquisition would have known that a bioamplifier contains three stages for the detection of a desired signal: a differential amplifier to improve the saliency of a desired signal above the 'noise' (read unwanted) signals, a band-pass filter that removes unwanted low-frequencies caused by such factors as electrode drift and high frequencies not related to the signals of interest, and a final additional amplification of the 'clean' signal to levels required by the monitoring device and application. (GLDecl. Par. #122)

In the context of the '753 patent, the desired signal is the ECG, specifically the rate of occurrence of the peak of the "R" wave. The unwanted signals include the 60Hz electrical noise, and muscle EMG that can vary with movement. It would be reasonable for one skilled in the art to select the first stage of an instrumentation amplifier with bandwidth of about at least 1 kHz, to pass all of the EKG waveform, and allow proper rejection of common signals

in the bandwidth of undesired EMG signals (up to at least 500 Hz with surface electrodes). A second stage would further filter and amplify the result to restrict the signal to the EKG bandwidth (e.g., .05-100 Hz), and remove any electrode drift, and residual electrical noise and residual EMG above the bandwidth. The final stage varies with the application, and in the case of pulse rate detection would apply a band pass filter to isolate the peak of the R wave (e.g., centered around about 17 Hz). In the case of the '753 patent, the last two stages can be applied simultaneously, with a bandpass filter depicted in the patent Fig. 2. (GLDecl. Par. #123)

With the mock up of the invention of the '753 patent tested by Dr. Galiana, she found that the detected EMG from the two live electrodes must have substantially the same magnitude and phase, since a substantially zero EMG component appeared in the output of the difference amplifier. (GLDecl. Par. #124)

A difference amplifier subtracts signals that are substantially the same, thereby removing unwanted signals. Thus, to determine the similarity of input signals, one need only look to a difference amplifier's output. Since a difference amplifier reduces to substantially zero input signals that are of substantially equal magnitude and phase, my observation of substantially zero EMG signal at the output of the difference amplifier definitively establishes that the input EMG signals were of substantially equal magnitude and phase. On the other hand, the output of the difference amplifier produces an amplified ECG signal confirming that the ECG detected by the two live electrodes was in phase and of opposite polarity. (GLDecl. Par. #125)

Dr. Galiana stated that the recitation in claim 1 that the left and right EMG have substantially equal magnitude and phase does not require any particular percentage of similarity. She further stated that, the proper interpretation of that term, as would be understood by one of ordinary skill in the art, is that the signals should be similar enough to achieve a substantially zero EMG output. (GLDecl. Par. #126)

The electrical circuit that she tested included an elongate member with four contact sensors (two for each hand). One outer contact sensor for each hand was connected to an input of the difference amplifier. The two internal contacts from the two hands were connected to a point of common potential, as illustrated in Figure 2 of the patent. A three channel oscilloscope was connected to both the inputs and the output of the differential amplifier for comparison purposes. An actual image of the oscilloscope traces demonstrated operation of the invention. (GLDecl. Par. #127)

The tests were performed with the subject comfortably and symmetrically holding, but not strongly grasping the electrodes, and the oscilloscope traces are reproduced in GLDecl. Ex. # 12 and 13. (GLDecl. Par. #128)

Signals 1 and 2 (i.e., the top two traces identified by the numerals 1 and 2 at the left side of the screen) contain the combined ECG, EMG, and ambient noise from right and left hands (outer electrodes) before the signals enter the differential amplifier. As can be seen, the first and second signals appear to be random noise. It is impossible to discern an ECG signal from either of the right and left hand contact sensor signals. The same is not true of the third signal at

the output of the differential amplifier. In the third trace, the differential amplifier outputs an ECG signal containing substantially no EMG noise. This is the result of the differential amplifier canceling the EMG noise and amplifying the ECG signal just as described in the '753 patent. A depiction of a clean ECG signal demonstrates how little noise actually remains. The residual EMG noise is so negligible compared to the ECG signal under measurement that EMG does not interfere at all with the ability to detect the peaks of the R waves. As a result, the residual EMG noise is referred to in the art as being "substantially zero." (GLDecl. Ex. #12). (GLDecl. Par. #129)

In addition, in 1992, many electrical engineers were still using analog oscilloscopes in which a "flying dot" moved across the screen without leaving a trace. When that common oscilloscope is used, it is much more difficult to visually detect small deviations from an expected trajectory. Because the EMG signal is reduced to substantially zero by the invention, a person of ordinary skill in the art in 1992 viewing a "flying dot" on an analog oscilloscope would have had a difficult time discerning appreciable deviation from the expected ECG signal, and would have characterized the EMG as substantially zero. Moreover, a person of ordinary skill in the art in 1992, implementing the patent, would have understood the difference amplifier depicted by reference numeral 23 in Figure 2 to be bioamplifier, which by definition, includes filtering to isolate the signal of interest, i.e., the ECG signal. (GLDecl. Par. #130)

As a matter of elementary biosignal processing, it is known that the bandwidth of an ECG signal

does not typically extend beyond 150 Hz, while that of an EMG signal can reach over 1000 Hz, and for heart rate applications, the bandwidth can be as low as 20Hz. As a result, a person of skill in the art attempting to enhance an ECG for purposes of counting heartbeats, would choose a bioamplifier configured for ECG amplification (e.g., including built-in filtering to restrict the bandwidth to that of the ECG and amplify as needed.) When such filtering is applied, the substantially zero EMG approaches absolute zero. (GLDecl. Ex. # 13) (GLDecl. Par. #131)

Because the circuit was built in rough fashion on a "bread board", she expected the residual noise in the traces to be higher than if built in a more permanent manner on a printed circuit board. The ability of even a rough circuit to cancel EMG to the level illustrated in the above traces demonstrates the effectiveness of the underlying principles of the invention. (GLDecl. Par. #132)

(h) Summary of Testing

The testing that Dr. Galiana and Mr. Lekhtman performed demonstrates that the device disclosed in the '200 patent could not, during exercise, detect first and second electromyogram signals of *substantially equal phase and magnitude* so that when these first and second electromyogram signals are applied to the first and second terminals of the difference amplifier *the first and second electromyogram signals will be subtracted from each other to produce a substantially zero electromyogram signal at the output of the difference amplifier*, whereas the device as described in the '753 patent does perform in this manner. (GLDecl. Par. #133)

The measured ECG/EMG ratios of the '200 device model for relaxed holding, non-relaxed holding, and grasping are 10.5, 1.10, and 0.875 whereas the corresponding ratios for the EMG balanced device are 50, 10, and 3.3. (GLDecl. Par. #134)

An ECG/EMG ratio of 2 could be considered as acceptable in order to accurately process heart rate. For the non-relaxed holding and grasped conditions associated with exercising, the '753 model device shows ratios of about 10 and 3, whereas the model of the '200 device shows ratios of about 1. (GLDecl. Par. #135)

An ECG/EMG signal to noise ratio in the range of about 3-10 would be manifested at the output of the differential amplifier of Figure 2 of the '753 patent, as having a substantially zero influence from the EMG. (GLDecl. Par. #136)

An ECG/EMG signal to noise ratio of about 1 or less associated with '200 device would be manifested at the output of the differential amplifier of Figure 2

of the '753 patent, as masking the ECG signal and thus requiring filtering after the differential amplifier. (GLDecl. Par. #137)

Although the ECG/EMG ratio for the model of the 200 device while held with relaxed hands can provide acceptable heart rate measurements, this situation does not arise in association with exercise apparatus or exercise procedures. If the handle is held while exercising, the grip pressure will correspond to the "grasping" in the last data column of the table. If the handle is held while pausing during or immediately at the conclusion of an exercise procedure, the muscles of the body are not calm enough to provide the relaxed holding in the first data column of the table. In this situation, the handle would most likely be held in the non-relaxed manner corresponding to the second data column of the table. The ECG/EMG ratios in the first data column would be expected from a subject truly at rest, not from a subject during or immediately after exercise. (GLDecl. Par. #138)

Since the main purpose of a heart rate monitor for use in association with exercise is to inform the user of the heart rate during exercise, especially the peak heart rate, any post-exercise monitor will inherently provide only an indirect measure of what the heart rate was during exercise. Due to the masking effects of EMG, this was a common technique as of 1992, but even if the device of the '200 patent were used in this manner, it would suffer the deficiencies of both an indirect measure and the inability to provide a strong enough ECG/EMG ratio as shown in the second data column. (GLDecl. Par. #139)

To Dr. Lekhtman's knowledge, only baton or handle type monitors that use his invention can pro-

vide ECG/EMG ratios associated with exercise, which are high enough to produce substantially zero EMG signal at the output of the differential amplifier. (GLDecl. Par. #140)

(i) No Anticipation

It cannot be presumed without explicit disclosure in Fujisaki that the circuit described therein is capable of canceling the EMG signals from each hand during exercise. It should be clear from the foregoing that the invention as claimed differentiates from the disclosures of the prior art and when implemented provides superior performance over the prior art in the manner described in the specification. Accordingly, none of the references cited by the Examiner anticipates sole independent claim 1 or any dependent claim 2-16, and all rejections under 35 USC §102 should be withdrawn.

Rejection Under 35 U.S.C. §103

(a) Context of the Invention

Until the invention in 1992 as claimed in the '753 patent, all practitioners in the Field who designed heart rate monitors, attempted to process only the detected raw waveform containing the ECG waveform, hum, and noise. This processing was effective when the subject was at rest, but became increasingly less accurate when heart rate was measured from detectors on a handle during exercise. This problem of obtaining accurate heart rate at the hands during exercise was well known in the exercise industry, but remained unsolved until the invention in 1992 according to the '753 patent. (GLDecl. Par. #51-53)

Although surface EMG was an established field, in 1990 Dr. Lekhtman was the first to understand that balancing the EMG as detected on the two

hands could lead to better signal to noise rati (ECG/EMG ratio), when the level of EMG is elevate during exercise on the machines. His invention ena bled for the first time, reliable extraction of the EC signal from untreated hands during physical activit (GLDecl. Par. #56-57)

He realized that the raw ECG waveform detecte on a handle as conventionally used for heart ra monitoring, would become increasingly masked b EMG waveforms as the subject increased physic activity. The differential amplifiers and filters use to remove waveform contributions from AC, boc hum, and noise inherently cancelled these contrib tions from the left and right hands, but the EM signals on the palm of the hands were amplified i the differential amplifier because they were n equal and not cancelled because they were not equa (GLDecl. Par. #58-61)

Because of the inability to remove EMG contr butions, and the much higher amplitudes of EM waveforms during exercise relative to ECG wav forms, heart rate monitors on exercise equipmer were never accurate, and due to polarization of th heart the ECG signal at the hands was further r duced, making it almost impossible to measure hea rate at the hands during exercise for about 30% the population. (GLDecl. Par. #62)

This situation presented a long-felt need for a r liable and accurate heart rate monitor for use durir exercise. The solution according to the '753 pate was to configure the circuit such that the high amp tude EMG signals detected from the left and rig hands during exercise would substantially canc each other (not with spectral filtering) while the lo

er amplitude ECG signals detected from each hand would be amplified. (GLDecl. Par. #64-65)

(b) The Statutory and Judicial Criteria for Patentability

Obviousness of an invention under 35 U.S.C. §103 is established if the differences between the subject matter sought to be patented and the prior art are such that the subject matter as a whole would have been obvious at the time the invention was made to a person having ordinary skill in the pertinent art. The subject matter to be patented is defined by the claims, and every feature and limitation recited in the claims (i.e., subject matter as a whole) must be considered in determining patentability.

Although the Examiner did not make an explicit rejection of claim 1 under 35 U.S.C. §103, applicant will, in view of the expedited procedure in reexamination, preemptively address this potential basis for rejection of claim 1. Given that Fujisaki does not recognize the significance of the EMG contribution to the difficulties in measuring pulse rate during exercise, and that none of the other references relied upon by the Examiner provides any teaching for how Fujisaki could be modified to provide such functionality, no *prima facie* rejection under 35 U.S.C. §103 can properly be made.

Under long-standing case law as recently confirmed by the United States Supreme Court, an analysis of obviousness under 35 U.S.C. §103 includes certain factual determinations:

(1) the scope and content of the prior art;

(2) the differences between the prior art and the claimed invention;

(3) the level of ordinary skill in the pertinent art; and

(4) any secondary considerations of non-obviousness.

KSR Intern. Co. v. Teleflex Inc., 127 S.Ct. 1727, 1734 (2007).

Such secondary considerations include:

a) the commercial success of the invention;

b) a long-felt but unsolved need;

c) failure of others to produce the invention;

d) surprising or unexpected results of the invention;

e) licenses showing industry respect for the invention;

f) skepticism of skilled artisans before the invention; and

g) copying by others.

Ruiz v. A. B. Chance Co., 234 F.3d 654, 667 (Fed. Cir. 2000).

(c) Applicant Satisfies the Patentability Criteria

(1) With respect to the scope and content of the prior art, one must include not only specific prior devices described in patents or commercialized, for providing handle-type heart rate monitors, but also the overall backdrop of what was known at the time regarding heart rate monitoring. In this respect, GLDecl. Ex. #8 is a copy of an article from 1987, in which various heart rate monitors were compared, with the conclusion that none of them provided satisfactory readings over the full range of exertion one would expect dur-

ing vigorous exercise. Importantly, these heart rate monitors were of the type deemed most accurate, i.e., with electrodes secured to the torso in the vicinity of the heart, with a read-out on a wrist dial or the like. The author concludes that the likely reason for the inaccuracies is that the body generates waveforms in addition to those associated with heartbeats and this renders difficult the measurement of the ECG itself. The scope and content of the prior art also includes the common knowledge and use of common sense of those of ordinary skill in the art associated with heart rate monitoring. (GLDecl. Par. #15-18, 48-55)

(2) The difference between the prior art and the claimed invention is quite clear. Claim 1 requires that the EMG waveforms on the left and right hands be of substantially equal magnitude and phase as detected on the respective left and right active electrodes. These features as incorporated into a heart rate monitor are simply not disclosed, taught or suggested by the prior art. (GLDecl. Par. #81- 83)

(3) The level of ordinary skill in the Field as working on heart rate monitoring would be a biomechanical electrical engineer having a Bachelor's or Master's Degree and five years of experience in designing biomedical devices and equipment. (GLDecl. Par. #92)

(4) The patentability analysis of the present invention under 35 USC §103 is replete with relevant evidence of secondary considerations favoring patentability. Not only are the differences between the prior art and the claimed invention clearly recited in claim 1, and not disclosed, taught or suggested in the relevant prior art, but many secondary considerations militate toward confirming the non-obviousness of the claimed invention.

a) Biosig Instruments Inc., the patent owner, has sold many baton type heart rate monitors under the Insta-Pulse trademark, and under various model designations. Also, these heart rate monitors have been incorporated into equipment sold by original equipment manufacturers without carrying the Insta- Pulse trademark or designation. According to the Declaration of Dr. Lekhtman, Biosig Instruments Inc. has sold over 100,000 units of EMG-Compensated Insta- Pulse Heart Rate Monitors. Further, according to the Declaration of Dr. Lekhtman, he has developed and OEM manufacturers have included EMG-compensated baton type heart rate monitors in products that were eventually commercialized and, although he does not have the sales figures for every such OEM, he estimates the total number to be in the several hundreds of thousands. (GLDecl. Par. #11, 70)

b) As evidenced by the paper of GLDecl. Ex. #8 and subsequent history of heart rate monitoring during exercise, there was a long-felt but unsolved need for improvement in the accuracy of heart rate monitors for exercise generally and in particular for the baton type monitors that rely on waveforms detected in the hands during exercise. (GLDecl. Par. #48-64)

c) Further, as evidenced by GLDecl. Ex. #8, and the subsequent history to this date, there is no evidence of record and Dr. Lekhtman is not aware of any source of baton type heart rate monitors for exercise, other than his own or those derived from his own, which compensate for EMG by configuring the detectors such that a differential amplifier will subtract the detected EMG signals

from the left and right hands to the extent that the output of the differential amplifier has no significant EMG contribution. There is no evidence of record that others independently conceived the same inventive idea, either before or after 1992. (GLDecl. Par. #37, 51, 56, 63)

d) The results of the issuance of the patent and the marketing and consulting of Dr. Lekhtman, according to the principles disclosed in the subject patent, were surprising or noteworthy in the industry, because of the rapid incorporation and commercialization thereof. (GLDecl. Par. #11, 70, 96-99)

e) Mr. Lekhtman has not only consulted for the numerous OEM's listed in his Declaration, which in itself shows industry respect for the invention, but the subject patent has been licensed by at least one major player in the OEM equipment supply market, Cybex. (GLDecl. Par. #11, 70, 97)

f) As of 1992 practitioners in the Field designed heart rate monitors on the basis of filtering EMG after removing systematic noise, knowing that EMG generated by each hand would be unequal. To the extent this reflects the "common sense" of persons of ordinary skill in the field as of 1992, Mr. Lekhtman exhibited an extraordinarily high level of insight and thinking "outside the box" to arrive at his claimed invention. (GLDecl. Par #15-22, 95)

g) Moreover, the Requestor, Nautilus, Inc., another major player in the OEM equipment supply market, has copied the claimed invention. For many years Nautilus engaged Mr. Lekhtman as a consultant. However, as a consequence of fail-

ing to come to terms with Mr. Lekhtman on royalties for the sale of infringing products, a patent infringement suit was filed by Mr. Lekhtman's company, Biosig Instruments Inc. If the invention as claimed were anticipated or a mere obvious variation of what was disclosed and taught by the prior art, including the now-expired patent to Fujisaki, these major players in the OEM equipment supply market would have adopted a non-infringing variation of Fujisaki, but instead sought the unexpected and significant advantage flowing from applicant's claimed invention. (GLDecl. Par. #55, 70, 101)

Claim 1

Claim is directed to a "heart rate monitor for use by a user in association with exercise equipment and/or exercise procedures, comprising...." As emphasized in several passages above, the prior art fails to disclose, teach, or suggest EMG balancing between the active electrodes on the left and right hands when the elongated member (handle) is held or grasped by the user while exercising. No one previously could produce a substantially zero EMG signal at the output of the differential amplifier under these conditions. Accordingly, applicant's invention cannot be an obvious adaptation or combination of references. This deficiency in the prior art coupled with strong secondary factors, should render claim 1 patentable under 35 USC §103.

Claims 2-3 and 12-13

For present purposes and without prejudice to later relying on limitations contained therein, the patentability of claim 2 relies on its dependence from claim 1 and claim 12 from its dependence on claim

11. Claims 3 and 13 recite ring members which are not disclosed or taught in the '200 patent. The '200 patent discloses large, cylindrical electrodes which represented conventional thinking in 1992 but which applicant recognized would exacerbate the masking of the ECG by the EMG. Ring electrodes were easier to configure for equalizing the EMG detected from each hand, according to claim 1. (See GLDecl. Par. #22, 43, 77, 78)

Claims 4-6 and 14-16

Claims 4 and 14 recite that the output of the difference amplifier is connected to the input of a bandpass filter. Only in Applicant's invention as depending from claim 1, is the noise (spectral) filter such as 32 of the '200 patent and other prior art unnecessary. Instead, a bandpass filter directly follows the difference amplifier because the EMG has been essentially removed in the difference amplifier and a high ECG/EMG signal can be counted. As described in column 3, lines 3-26 of the '200 patent, the filter 32 "further reduces the noises still included in the heart pulse signal from the differential amplifier". These noises are due in large part to the EMG that was not suppressed in the difference amplifier according to Applicant's invention. (See GLDecl. Par. #44, 50, 61) Accordingly, the combination of features recited in claims 1, 2, 3 and 4 cannot be deemed obvious.

Claims 7, 8, 10 and 11

These claims depend from claim 1 and further emphasize the aspect of heart rate monitoring during exercise, in that the monitor is mounted on a floor stand (claim 7), a wall (claim 8), or an exercise apparatus (claims 10, 11). The user would be in vigorous motion while grasping the handle on the stand, wall,

or apparatus. As noted immediately above, only applicant's invention can produce a substantially zero EMG signal at the output of the differential amplifier under these conditions. Furthermore, to the extent some of these claims depend on claim 6, they include the distinctive combination of bandpass filer following the difference amplifier per claim 4, as argued above.

Claim 9

Applicant notes with appreciation the indication of allowability of claim 9.

Conclusion

Although in a schematic the circuit of Fujisaki resembles the circuit disclosed in the subject patent, one cannot use the circuit of Fujisaki to anticipate or render obvious the claims in the subject patent; it is rudimentary that the prior art must be compared with the claim, not applicant's drawing which is merely schematic and does not explicitly include all features recited in claim 1.

Whereas the relevant prior art in the field of heart rate monitoring for exercise equipment did not adequately compensate for the EMG waveform, once the inventive concept of the subject patent was disclosed, it would have been a routine matter without undue experimentation for a person of ordinary skill in the art to incorporate the EMG compensation feature as claimed.

In 1992, at the time the subject patent application was filed, there existed a substantial body of literature and common knowledge among biomedical engineers and scientists, concerning the properties and detection of EMG waveforms on the skin surface. It is clear that given the inventive concept that the

active electrodes are to be configured such that the EMG signal detected on one active electrode will be of substantially the same magnitude and phase as that detected on the other active electrode, the relevant design variables could readily be optimized for any given piece of exercise equipment.

These subtle adjustments are unique to each end use and cannot be fully shown in a patent figure, but would be evident to those of ordinary skill based on the disclosure in the subject patent.

As a consequence of balancing the detected EMG signal input to the differential amplifier, the accuracy of heart rate measurement during exercise has been improved dramatically.

The invention as claimed is non-obvious and patentable under 35 U.S.C. § 103 as well as 35 U.S.C. § 102.

Respectfully submitted,

GREGORY LEKHTMAN

By: s/

L. James Ristas
Registration No. 28,663
Alix, Yale & Ristas, LLP
Attorney for Applicant

Date: June 12, 2009
750 Main Street - Suite 1400
Hartford, CT 06103-2721
(860) 527-9211
Our Ref: LEK/151/US
LJR/io

IN THE UNITED STATES PATENT AND TRADEMARK OFFICE EX-PARTE REEXAMINATION

Application No.:	90/010,366
Applicant:	Gregory Lekhtman
Pat. No.:	5,337,753
Issued:	08/16/1994
Title:	Heart Rate Monitor
TC/A.U.:	3992
Examiner:	A. J. Kosowski
Docket No.:	8185-82247-01 and LEK/151 /US

DECLARATION OF GREGORY LEKHTMAN

1. I, the undersigned Gregory Lekhtman, am the inventor on U.S. Patent No. 5,337,753 issued August 16,1994 on App. No. 895,936 filed June 9, 1992, and assigned to Biosig Instruments Inc., (Biosig) which is the current owner.

2. This patent ('753 patent) is currently under reexamination at the request of Nautilus, Inc., which relies primarily on the disclosure of U.S. Pat. No. 4,444,200 ('200 patent) as giving rise to a substantial new question of patentability.

3. This Declaration was prepared to provide a factual record in support of the accompanying Response to the Official Action dated April 13, 2009 which Response I have read and approved as consistent with this Declaration.

4. This Declaration includes the Exhibits listed in the attached List of Exhibits.

Personal Background

5. I attended six years at the Moscow University in the former USSR (now Russia) and obtained a degree in electrical engineering with a specialization in electronics and space cybernetics. I subsequently studied for six years and obtained the equivalent of a PhD at the Brain Research Institute of the Academy of Medical Sciences (USSR) with specialization in neurophysiology and neurocybernetics.

6. In 1974 my family and I immigrated to Canada. From 1974 to 1977 I worked in the field of medical electronics as a researcher and a consultant for Physico Medical Systems Corporation. One of my projects was the development of EMG controlled hand prosthesis for the amputees.

7. I incorporated Biosig Inc. in 1977 and Biosig Instruments Inc. in 1983, and from that time the company has been in the business of medical and fitness electronics. I am the president of Biosig Instruments Inc. A summary of the company's current products and services is attached as **Exhibit 1**. Since the founding of the company, I have been responsible for all R&D, technical performance, manufacturing and marketing activities.

8. I am the named inventor or co inventor of nine U.S. patents and under my direction the company has commercialized products covered by these patents. (**Exhibit 2**) I have numerous patents issued and pending in Canada, Japan, Korea and Europe.

9. Since prior to 1990, Biosig has been a leader in the development of biometric devices attached to

or in contact with human skin, especially in conjunction with exercise equipment.

10. The following companies have engaged my services through Biosig, as a consultant to their development of biometric devices and techniques: The Sharper Image, Sony, Nordic Track, Polar, StarTrac by Unisen, Cybex, Stair Master, Shwinn, Nautilus, Weider, King I Meter, Kettler and many others.

11. Biosig has supplied companies including Star Trac and Cybex for many years with more than one hundred thousand of EMG/ECG monitors according to the invention claimed in the '753 patent. These companies are leaders in the world of cardio-fitness machines. Today Cybex is licensed by Biosig for EMG/ECG technology under U.S. Patent 5,337,753.

12. The following list is representative of the contributions to books or treatises and professional papers I presented on biometric devices and techniques since 1970:

- 600 abstracts on the subject of neurophysiology and electrophysiology,
- 13 publications in major scientific magazines on the subjects of neurophysiology
- Contributed chapters on Heart Rate Monitoring and Biofeedback to the book of Dr. Goldman E-Factor. This book was a text book for American universities.
- Regularly submitted articles on heart rate technology and biofeedback in Medical Electronics magazine.

13. I have received awards or recognition for my contributions to the study of such biometric devices and techniques and other fitness related inventions

from invention conventions in the USA, Japan, Brussels, Geneva, Germany, Argentina and have many diplomas. **(Exhibit 3)**

14. As a consequence of this background, I am considered an expert in the Field of biosignal acquisition and processing (understanding how the human body generates and transmits electrical signals, and how to detect, process and record those signals), especially the specific sub-fields of electrocardiology, electromyography, and electroencephalography, which all concern measuring and analyzing electrical waveforms produced by the human body as manifested on skin.

Heart Rate Monitoring Before My Invention

15. Until I conceived my invention and in 1992 filed my patent application No. 895,936, efforts to develop heart rate monitors for use in connection with exercise were based solely on measurement of ECG waveforms, as was prevalent for medical diagnostics at the time.

16. I am familiar with the state of the art in the Field as of the filing in 1981 of the application which matured into the '200 patent as well as in 1992, the level of skill of ordinary practitioners in the Field as of 1981 and 1992, and the common knowledge and common technical sense of such practitioners as of 1981 and 1992.

17. Equipment for heart rate monitoring for stationary positions and exercising has been in use since before 1980, relying on detection of the "R" peak in the ECG electrical waveform generated by the heart with each pulse.

18. The Background section of the '200 patent and the references cited therein accurately describe

conventional thinking as of 1981. U.S. 4,319,581 (Cutter) cited as a reference in the prosecution of the '200 patent cites prior art corresponding to Biosig's U.S. Des. Pat. D254,569 as a reference. **(Exhibit 4)**

19. U.S. Des. Pat. D254,569 (1980) shows a handle (baton) with two spaced apart detector electrodes for one hand and a single detector electrode for the other hand, usable to measure heart rate through the hands while exercising, as commercialized in the Biosig product "Insta-Pulse" (U.S. Trademark Reg. 1,156,243). The three electrodes represent two active (live) electrodes and one common (indifferent, inactive, ground, or reference) electrode (First Insta-Pulse 105). At that time it was common to use large indifferent electrodes in ECG systems in order to make better contact with electrical ground.

20. Prior to 1988 Biosig introduced another Insta-Pulse 105 heart rate monitor (Second Insta-Pulse 105), having a handle mounted on a stand, with left and right hand portions in which two electrodes are provided for each hand. (**Exhibit 5**). The circuit associated with this product is the same as in the First Insta-Pulse 105.

21. The geometry of electrodes on the right and left side of the Second Insta-Pulse 105 are not equal. The fourth electrode was connected to increase the size of the live electrode area. Thus, this device had three live and one ground electrode. The product did not perform well and was quickly discontinued.

22. The First 105 Insta-Pulse (two live, one ground) was performing very well compared to the enlarged four electrodes of the Second Insta-Pulse 105. In the physiology of ECG at the time, experts concentrated on the size of surface electrodes in or-

der to increase ECG signal without realizing that they would increase the noise of EMG.

Technical Background

23. The heart achieves its pumping action by rapid and synchronized depolarization starting in the atria (SA node) and spreading to the ventricles (via highly compact and conductive fibers). Because the heart is not aligned in the center of the body and has a tilt leftward from apex to bottom, ECG potentials have opposite polarity, when observed on opposite sides of a line tilted from left shoulder to right thorax/waist. Thus ECG signals will have opposite polarity in the two hands.

24. Depending on the site, ECGs measured with surface electrodes will have amplitudes ranging from 1mV to 10mV with a bandwidth of 0.05-100Hz for a standard 12-lead ECG used in medical diagnostics.

25. A schematic of the portions of an ECG waveform is shown in **Exhibit 6.** Every beat of the heart emits an electrical pulse causing a wave pattern known as an electrocardiogram (ECG) wave. Conventionally, the different portions of the ECG wave are identified by letters. The key phases of an ECG waveform are labeled as the P, QRS and T waves. These are related to the state of activation in different parts of the heart, and are an integral part of the ECG, as opposed to noise.

26. The entire waveform is not needed to achieve high accuracy in all ECG applications. For example for simple monitoring of heart rate or pulse rate, only the "R" peak of the QRS complex is needed, since each R peak corresponds to one heart beat. Therefore, while clinical applications require high fidelity in the range of 0.05-100 Hz, a typical heart rate mon-

itor only passes frequencies around 17 Hz with a strong resonance peak (Q factor). In other words, heart rate monitors ignore most of the heart rate signal other than an area around the peak of the R wave.

27. All skeletal muscles, including hand muscles, emit their own electrical signals (EMGs). As **Exhibit 7** illustrates, the EMG signal can completely mask the peak of the R wave, making it difficult to differentiate the R wave peaks from the EMG noise.

28. The significance of noise in an electronic signal is defined in terms of the signal under measurement. In **Exhibit 7,** since the EMG noise masks the ECG signal under measurement, the noise is considered significant. When EMG noise is so much lower than the R-wave peaks that the noise does not interfere with the ability of a circuit to detect the R wave peaks, persons in the art commonly refer to the noise as "substantially zero."

29. For monitoring heart rate from sensors in a handle, whether the subject is at rest or exercising, the electrocardiograph (ECG) waveform originates at the heart and travels a considerable distance to the hands, presenting an "R" wave amplitude of only about 100 - 1500 microvolt, along with AC noise and body hum in the microvolt range.

30. For monitoring heart rate from sensors in a handle, the raw signal as detected at the hands and delivered to a differential amplifier is a composite of the ECG waveform, hum, noise and EMG.

31. The ECG signal is masked by strong EMG signals on the hands. Since the spectrum of the EMG signal is close to the spectrum of the "R" wave of the ECG, conventional practice was and still is to pro-

vide an electronic filtering of EMG signals. This is inefficient, because the filtering degrades the quality of the ECG signal and reduces the signal to noise ratio of ECG/EMG.

32. ECG polarity and amplitude depend on the vector of potentials in relationship to a heart. An electric potential waveform is generated at the heart for each pulse or beat of the heart. The strength or amplitude of the voltage is diminished as the waveform passes through the body.

33. EMG electrical potential is generated by muscle activity throughout the body but EMG potential on the skin is dominated by local muscle activity, and is not correlated with or commensurate to heartbeat. EMG waveforms were known to persons in the Field as a source of interference in the measurement of ECG. However, with an ECG sensor adjacent the heart, the ratio of ECG signals strength to EMG signal strength was high enough to easily detect and count the "R" component of the ECG waveform.

34. In the measurement of heart rate using ECG detected in the palms, each active sensor is intended to detect a waveform from a single generator, the heart. In contrast, for the measurements of EMG two generators are involved, one is the left palm and the other the right palm.

35. Monitoring heart rate from sensors on the hands presented a major problem because the ECG waveform diminishes during travel from the heart to the palm of the hands to the extent that the local EMG waveform in the palms overwhelmed the ECG waveform. This was especially a problem because the EMG waveform but not the ECG waveform increases

in amplitude during exercise, and the ECG and EMG frequencies overlap.

36. During exercise, the EMG waveform on the palm of the hands increases 200-300 times from approximately 10 microvolt up to 2- 5 millivolt, thereby overwhelming the ECG "R" wave amplitude of about 100-1500 microvolt with overlapping frequencies.

Operation of the Device Disclosed in Fujisaki's '200 Patent

37. In 1981 Fujisaki filed the patent application which matured into the '200 patent. To my knowledge the device described therein was never commercialized. I believe it was not commercialized because it would not work satisfactorily.

38. The '200 patent describes a handle for measuring heart rate while exercising, with two large and closely spaced detector electrodes for each hand. One electrode for each hand is active and the other is a common ground.

39. With the device in use during exercise, the left active electrode would detect a faint ECG waveform traveling from the heart to the left palm, and a strong EMG waveform potential between the left active and left ground. Similarly, the right active electrode would detect substantially the same faint ECG waveform but of opposite polarity and a strong EMG waveform potential between the right active and right ground.

40. Whereas the ECG waveforms on the left and right palms are substantially equal and of opposite polarity, the EMG waveforms are of the same polarity but different on the left and right palms. EMG waveforms on the left and right hands may be influenced by common sources of electrical activity, but it

was well known that the overall potential at the skin surface is different for the left and right hands.

41. The circuit of the '200 patent and the circuit of the '753 patent will detect separate EMG waveforms on each hand, as an electrical potential between two distinct areas (active detector area and grounded detector area) in contact with a respective palm. The strength (amplitude or magnitude) of an EMG measurement is proportional to the space between the active and ground electrode and the size of the electrodes.

42. Upon seeing the figures depicting the detector electrodes in the '200 patent, any knowledgeable person in the field as of 1992 would conclude that any detected EMG on the right and left hands would be unequal and thus could not be cancelled by the differential amplifier. Furthermore, as of 1992 neither the '200 patent or any other source of information about heart rate monitoring disclosed, taught, or suggested that EMG should or could be attenuated or cancelled by a differential amplifier that amplified the ECG signal.

43. The large surface area of the electrodes as illustrated in the '200 patent confirms that the inventor Fujisaki was not aware of the principles of EMG detection I relied on to make the invention claimed in the '753 patent. In particular, the use of large electrodes has the doubly detrimental effects of (a) magnifying the strength of the detected EMG relative to the detected ECG, thus reducing the ECG/EMG signal to noise ratio and (b) increasing the inequality and time dependent variance between left and right hand EMG resulting from continual changes in contact area between the hands and the electrodes during exercise.

44. The circuit disclosed in the '200 patent is functionally equivalent to the circuits of many physiological monitors, including my First Insta-Pulse 105 product, and as used for heart rate monitoring, is simply an ECG type of a monitor with two active electrodes and one large inactive electrode formed by the common connection of the left and right indifferent electrodes. The '200 circuit includes a filter after the differential amplifier, which would be necessary to reduce the influence of the difference between left and right hand EMG waveforms that would be passed through the differential amplifier.

45. The monitor disclosed in the '753 patent is an EMG/ECG monitor and has two electrodes to monitor ECG, two electrodes to monitor left EMG, and two electrodes to monitor right EMG in such a way that the left and right EMG signals are close enough in magnitude and phase to cancel out in the differential amplifier.

46. The monitor in the '200 patent cannot be presumed to function as claimed in the '753 patent. Many circuits for electrophysiology look similar, but perform different functions.

47. Given that the EMG waveforms from the left and right hands are not equal, the fact that the two active electrodes in the '200 patent provide the input to the differential amplifier and the two inactive electrodes are connected to a common potential does not overcome this inequality in EMG contribution, so the EMG contributions are neither equal nor cancelled.

Accuracy of Exercise Heart Rate Monitors as of 1992

48. **Exhibit 8** is a paper written in 1987, in which the accuracies of various well-known heart rate monitors for exercise were compared. These were primarily of the type having the sensor strapped to the heart. The author concluded that these were surprisingly inaccurate, and suspected that even with the sensors close to the heart, other locally manifested electrical activity (such as EMG) was the cause.

49. Persons of ordinary skill in 1981 realized that the effect of localized EMG discouraged the development of hand-held heart rate monitors, e.g., so called "handle" or "baton" type monitors to be grasped in the hands during exercise, but some efforts such as my own Insta-Pulse were commercialized.

50. My First 105 Insta-Pulse product and my Second Insta-Pulse 105 product and the device disclosed in the '200 patent used a similar differential amplifier whereby the raw waveform detected on each hand was delivered as the active signal at respective inputs of the differential amplifier, followed by filtering to reduce the influence of the body artifacts (EMG). None of these monitors could provide an accurate heart rate while grasped during exercising on a machine, because of the strength and variation of the EMG waveform on the palm of the hands.

Development and Operation of My Invention

51. Until my invention in 1992 as claimed in the '753 patent, all practitioners in the Field who designed heart rate monitors, attempted to process on-

ly the detected raw waveform containing the ECG waveform, hum, and noise.

52. This processing was effective when the subject was at rest, but became increasingly less accurate when heart rate was measured from detectors on a handle during exercise.

53. This problem of obtaining accurate heart rate at the hands during exercise was well known in the exercise industry, but remained unsolved until my invention in 1992 according to the '753 patent.

54. During the period 1975-1990 I had tried to find a solution to this problem, and I consulted for Nordic Track, Stair Master, Schwinn, Nautilus and many others in an effort to solve this problem.

55. During 1989-1990 Biosig was a supplier of heart rate monitors to Nordic Track. These monitors were chest belt telemetry units, because only these were thought to be reasonably accurate. Today, Nordic Track uses monitors on the handlebars of their high-end machines, according to the claims of Biosig's '753 patent.

56. Although surface EMG was an established sub-field in 1990, I was the first to understand that balancing the EMG as detected on the two hands could lead to better signal to noise ratio (ECG/EMG ratio), when the level of EMG is elevated during exercise on the machines.

57. My invention enabled for the first time, reliable extraction of the ECG signal from untreated hands during physical activity, and the '753 patent teaches the inventive concept that EMG signals on the hands are to be balanced by the detector electrodes, so that they can cancel each other and leave a clean ECG signal for accurate counting.

58. I realized that the raw waveform detected on a handle, as conventionally used for heart rate monitoring, would become increasingly masked by EMG waveforms as the subject increased physical activity.

59. I recognized the significant fact that at the exercise handle, EMG waveforms from muscles of the palm of the hand are also sensed, at much larger amplitude of up to 2- 5 millivolt.

60. I also recognized that during exercise, the ECG waveform in each hand remains about equal but of different polarity and the inequality in EMG waveform in each hand increases.

61. The differential amplifiers and filters used to remove waveform contributions from AC, body hum, and noise inherently cancelled these contributions from the left and right hands, but the EMG signals on the palm of the hands were amplified in the differential amplifier because they were not equal and not cancelled because they were not equal.

62. Because of the inability to remove EMG contributions, and the much higher amplitudes of EMG waveforms during exercise relative to ECG waveforms, heart rate monitors on exercise equipment were never accurate, and due to polarization of the heart the ECG signal at the hands was further reduced, making it almost impossible to measure heart rate at the hands during exercise for about 30% of the population.

63. I am not aware that the device according to the '200 patent was ever commercialized, and had no knowledge about its existence until the litigation with Nautilus. But by reading the 200 patent I can conclude that this device will never work on exercise machines.

64. This situation presented a long felt need for a reliable and accurate heart rate monitor for use during exercise.

65. The solution according to my '753 patent was to configure the circuit such that the high amplitude EMG signals detected from the left and right hands during exercise would substantially cancel each other (not with spectral filtering) while the lower amplitude ECG signals detected from each hand would be amplified.

66. The cancellation of the EMG was achieved by configuring the sensors such that EMG signals as detected from the left and right hand would be of substantially equal amplitude and phase, even though the EMG waveforms at the palm skin surface were not substantially equal at the left and right hands.

67. This equalization or balancing could be easily done by using known EMG detectors that employed a high signal to noise ratio of EMG to ECG. The EMG signals detected on the left and right palms are delivered to a differential amplifier in the EMG measuring device, and the available design variables are adjusted until the differential output is minimized, i.e., close to zero.

68. In commercial practice, the procedure of balancing is performed a priori in a prototype lab or factory, as follows:

a. The type of exercise machine is analyzed with regard to comfortable positioning of the hands on a proposed handle size and placement.

b. Several configurations of the electrodes on the handle are compared for the best perfor-

mance (minimizing differential EMG on left and right hands, such as measured by the Biosig Model 501 EMG System).

c. When the optimum configuration of the spacing, size, shape and materials for the size of electrodes is found to produce a balanced detection of EMG, the handle is connected to the proposed final heart rate monitoring circuit,

d. The handle with final circuitry is tested to confirm that the ECG to EMG signal ratio is sufficient to assure the heart rate as determined from the ECG with EMG-compensation of the detectors, is within the desired tolerance.

69. The size, shape, material and spacing of the active electrodes cannot be standardized for all exercise handles. Analyses must be made on a machine-specific basis to find best ECG/EMG ratio for each machine. That is why all the infringers are using different configurations of the EMG balanced electrodes on their equipment.

70. Biosig used to manufacture the heart rate monitors for Star Trac and Cybex, and developed prototypes for Nautilus. Biosig had direct contact with the engineers of these corporations and guided them according to claim the '753 patent. Over the years, Biosig arrived at different ratios for different machines. The work was conducted in house and in the field using "0" output of the EMG differential amplifier as a guide. From 1995 Biosig made hundreds of thousands of good working heart rate monitors. For example, Biosig supplied Star Trac with heart rate monitors for more then ten years. At that

time the international press and the fitness industry considered Star Trac cardio machines the best in the world. Exercise machines from many OEM suppliers on the market today are using Biosig's patented EMG/ECG technology. After development of EMG/ECG technology according to the '753 patent, Biosig stopped producing radio telemetry heart rate monitors with a chest belt, which were used before on 30% of the population which could not use the original ECG hand held technology of the Insta-Pulse.

Claim 1 of the '753 Patent Differentiates from the '200 Patent

71. The EMG signals at the hands, in association with exercise, can only be cancelled in a differential amplifier, if the detectors are balanced *a priori*. Such balancing requires four EMG electrodes vs. three ECG electrodes. In relationship to a heart four electrodes represent three electrodes, because two electrodes are connected. In relationship to EMG generators of the palms of the hands there are four electrodes, because each pair of electrodes measures the difference of potentials on each palm of the hand. If these potentials are not balanced, the result will be an amplified EMG signal. If the electrodes are balanced, the result will be cancellation of EMG signals.

72. A subject at rest while holding the handle of the '200 patent would produce ECG waveforms of different polarity on each hand, in a range of 100 to 500 microvolt. EMG waveform contributions at the left and right detectors would be in the range of 2 millivolt on average but could be as high as 5 millivolt in cases with very strong hands.

73. During exercise, the detector configuration of the '200 patent will not eliminate EMG but rather amplify them. That is why it will not work on exercise machines for anyone.

74. The '200 patent does not even mention EMG so there is no basis for anyone to learn that as a precondition to providing the circuit shown in the '200 patent, one must through trial and error configure the electrodes such that the inherently unequal EMG waveforms are equalized as detected on the left and right hands.

75. None of the successful implementations of the inventive concept of my '753 patent has a detector configuration as shown in the '200 patent.

76. The detector configuration for each hand according to the '200 patent has a wide active detector closely spaced from a wide inactive detector. With this configuration, the surface areas of contact between the hand and each detector will vary from person to person and for a given person will vary as the position of the hands changes during heavy exercise. The EMG waveform detected at the left and right hands cannot be substantially equal.

77. The inventor on the '200 patent likely believed that the large electrode detectors would increase the amplitudes of the ECG signals and thus improve the ability of the downstream filter and counting circuit to discriminate and count heart pulses, but in fact the larger the detector the more the ECG signal is masked by the EMG signal during exercise. Also, since EMG signals are commensurate with the contact area with the skin, use of large electrodes would result in varying the contact area and

thus detected EMG as the hands shift on the handle during exercise.

78. In the illustrated embodiment of '753 patent, the detector electrodes are relatively narrow and spaced apart, and are very likely to be completely covered by (in contact over the entire detector area with) the hands throughout an exercise routine, regardless of shifting hand position on the handle.

79. Although the handle of the '200 patent had two electrode detectors for each hand, the configuration differs from that illustrated in the '753 patent. In the '200 patent, the space between electrodes is narrower than the width of each electrode, whereas in the '753 patent the space between electrodes is wider than the width of each electrode. The drawings of the electrodes in the '753 patent teach that the space relationship of the electrodes were taken into consideration to achieve equal EMG signals.

80. This precondition is not disclosed or derivable from the '200 patent, and is the unanticipated and non-obvious key to the inventive concept; but once disclosed according to the '753 patent, it can be readily implemented from the known, routine knowledge and practices regarding measurement of EMG.

81. Claim 1 of the '753 patent recites in part that *...a first electromyogram signal will be detected...and a second electromyogram signal, of substantially equal phase and magnitude to said first electromyogram signal will be detected* ... so that when these first and second signals are applied to the first and second terminals of the difference amplifier ...*the first and second electromyogram signals will be subtracted from each other to produce a substantially ze-*

ro electromyogram signal at the output of the difference amplifier..."

82. The device of the '200 patent does not satisfy the underlined features of claim 1 of the '753 patent. Claim 1 specifies the required electrical characteristics of the active electrodes. Since it was common knowledge as of 1992 that EMG potentials on each hand would be different and thus any detected EMG signals using conventional measurement techniques from the left and right hands would be different, one of ordinary skill in the relevant field would readily understand from the disclosure in the '753 patent, that the inventive concept and the advance relative to the state of the art, was that the detectors must be configured a *priori* to produce equal EMG from the left and right hands.

83. The passage quoted from claim 1 defining the inventive concept, was in claim 1 as originally filed, and was not known or obvious to others at the time I made my invention.

84. Subsequent amendments to claim 1 did not modify or limit the quoted language defining the inventive concept, but instead were added because the claim was directed to a heart rate monitor and so other aspects of a heart rate monitor were added to claim 1, i.e., detecting and processing of ECG to produce a heart rate output.

85. As of 1992, with the disclosure of my inventive concept of ensuring that the detected EMG waveforms are of equal amplitude and phase when input to the differential amplifier according to my patent, the actual achievement of this objective would have been a routine matter for anyone in the

Field, who would have been familiar with electromyography.

86. As of 1992 and the issue date of the patent, the recitation in claim 1 of substantially equal electromyogram signals detected at the left and right hands would clearly disclose to one working in the Field that he or she should balance the detection circuitry.

87. As of 1992, it was not obvious for an ordinarily skilled practitioner in the Field, whose standard techniques for heart rate monitoring focused on detection and processing of ECG signals with filtering of EMG after the differential amplifier, to cancel EMG in the differential amplifier as a way of improving heart rate monitoring.

88. However, once my inventive concept of equalizing and then subtracting the detected EMG from each hand was disclosed, one of ordinary skill in the Field would be expected to understand how to easily implement the claimed invention for any given exercise machine.

89. Electromyography was an established discipline in 1992.

90. **Exhibit 9** includes summaries and abstracts from articles published in 1992 or which, if published later, refer to or are derived from work performed before 1992, showing that it was commonly known how to measure EMG and what variables affected the measurement of EMG.

91. The variables include distance between active and reference electrodes, contact area between skin and electrode, distance of electrode from the muscle activity that generates the EMG waveform, material properties of which electrode is made.

92. One of ordinary skill in the Field as of 1992 would have a B.S. or M.S. degree in electrical engineering or biomedical engineering, at least five years experience working for a medical diagnostics or exercise equipment design shop, and have ready access to and understand the literature of **Exhibit 9**.

93. **Exhibit 10** is a photo of Biosig's Model 501 EMG System, as it appeared in marketing materials when the System for measuring EMG was commercially introduced in 1983 and as available in 1992.

94. Such person would know about ECG and EMG measurement and the variables affecting such measurement, but would have considered these as unrelated phenomenon, i.e., ECG concerns very low voltage waveforms produced centrally by the heart, to be measured for diagnosing the heart, and EMG concerns higher voltage waveforms produced locally by active muscles, for diagnosing muscle activity.

95. Many studies of EMG signals for muscle analyses and the like have been reported in the literature, but no known literature relating to measurement of EMG or ECG has even hinted at equalizing EMG signals from two distinct active detectors, as a technique for enhancing the processing of the ECG signal in heart rate monitoring equipment.

The Third Insta-Pulse 105 Was An Immediate Commercial Success

96. The technique of the '753 patent was implemented in Biosig's Third Insta-Pulse 105 monitor device and was an immediate commercial success. In addition, the invention has been incorporated into many heart rate monitors by the major exercise equipment manufacturers. Biosig has obtained and analyzed two machines of Nautilus which have dif-

ferent geometry of the sensors, indicating the significance of detecting substantially equal EMG as dependent on the characteristics of the machine.

97. In many instances companies such as Nautilus, Icon, Weider, Star Trac, Stair Master, Schwinn and many others have called me in to design their heart rate monitors according to the '753 patent.

98. In other instances the companies designed the monitor handles without my assistance, using the inventive concept disclosed in the 753 patent and the knowledge and skill of ordinary practitioners in the Field.

99. As a consequence, Biosig has identified numerous infringers of the '753 patent.

Tests Confirm My Invention Substantially Attenuates the Differential EMG

100. **Exhibit 11** is a report I prepared based on testing I performed on various configurations of electrodes on a simulated exercise machine handle, including my prior Insta-Pulse product, the device disclosed in the '200 patent, and devices based on the disclosure in my '753 patent. A photographic picture (Pic.) shows the condition of each test, and my statements below will be made with reference to particular Pics. In each case, the EMG signal was measured at the output of a differential amplifier having inputs from left and right hands. The following conclusions were drawn:

a. With the handle simply held, a three electrode ECG system (400 microvolt) works better than an unbalanced four electrode system (450 microvolt) (Pics 1 -3)

b. With the handle grasped, an ECG monitor with one indifferent electrode (550 microvolts) performs better than an ECG monitor with two indifferent unbalanced electrodes (1150 microvlts). (Pics. 4-5)

c. With the handle grasped, the four electrode EMG balanced system according to the '753 patent (450 microvolt) performs much better than a four electrode unbalanced system (1200 microvolts) (Pics. 6-10)

d. A handle configured according to the '200 patent produces 950 microvolt EMG output when simply held symmetrically and 1200 microvolt output when grasped symmetrically. (Pics. 11-13)

e. A handle configured according to the '200 patent produces 1000 microvolts when grasped asymmetrically, less than when grasped symmetrically, thereby proving that the four electrode configuration taught by the '200 patent cannot be EMG balanced. (Pic. 14).

f. The circuit of the '200 functions as a three electrode ECG system and the inventor evidently did not realize that by providing the fourth electrode the EMG effect on the ECG signal would be worse (Pics. 15-17), so this cannot anticipate or render obvious the invention claimed in the '753 patent.

g. The Third Insta-Pulse 105 EMG product of Biosig that incorporates the invention of the '753 patent, produces much lower EMG output from the differential amplifier when held or grasped, than any of the earlier Insta-

Pulse or model of the '200 patent. (Pics. 18-20)

101. Nautilus and Unisen (Star Trac) used the teachings of the '753 patent in designing EMG-balanced detectors for commercialized exercise equipment. (Pics. 21-23).

102. Close inspection shows differences in electrode configurations between EMG balanced and unbalanced, for a given model of exercise equipment. (Pics. 24 -26).

103. To EMG balance a configuration of detectors for a given end use, reconfigurable bench versions or prototypes are incrementally adjusted until the EMG difference between left and right is minimized. (Pics. 27-29). One cannot expect the circuit shown in the '200 patent to provide EMG balanced detector electrodes or teach this concept to one of ordinary skill because care must be taken to configure the system so that the differential EMG is low enough to produce substantially zero EMG contribution at the output of the differential amplifier.

104. Pic. 30 shows two baton type heart rate monitors having the same overall dimensions. The (Third) Insta-Pulse 105 monitor is sold by Biosig and the Polar monitor was produced by Biosig for Polar according to Polar's requirements. It can be seen that to achieve optimum ECG/EMG ratio according to the '753 patent, slightly different detector electrode spacings were required.

105. Pics. 31 and 32 show that the four-electrode monitor illustrated in the E-Factor book has smaller spacing between the left electrodes relative to the larger spacing between the right elec-

trodes, whereas the electrode spacing shown in Fig. 2 of the '753 patent is shown as substantially uniform.

106. Pic. 33 shows the circuit diagram for the detectors on the monitor shown in the E-Factor book, which is different from the circuit of the '200 patent and the circuit of the '753 patent.

107. Picture 34 was presented by the Requestor as somehow relevant to the reexamination, but it only shows connections for monitoring the "R" wave of the ECG, without showing how to detect the EMG on each hand.

Other Tests Confirm That the Attenuated Differential EMG According to My Invention Results In a Substantially Zero EMG Influence on ECG Output of a Differential Bioamplifier

108. Dr. Henrietta Galiana is the Chairman of the Department of Biomedical Engineering at McGill University and prepared an Expert Report for Biosig in the pending infringement action by Biosig against Nautilus.

109. Dr. Galiana performed tests on a laboratory mock-up of the device as shown in Figures 1 and 2 of the '753 patent.

110. My tests as reported in **Exhibit 11** focused on the difference in EMG voltage between the left and right hands as generated on a laboratory mock up having various configurations of detector electrodes, measured by a dedicated EMG meter.

111. Dr. Galiana's tests focused on the overall waveforms input to and output from a differential bioamplifier connected to a mock up of a device as shown in Figures 1 and 2 of the '753 patent. This

mock up was configured to resemble the Third Insta-Pulse 105 monitor.

112. Both Dr. Galiana and I are experts in the field of biosignal acquisition and processing and I agree with the following statements excerpted from her Report as if they were my own. Statements in quotations are direct quotations, whereas statements without quotations are to be considered mine based on her statements or her tests.

113. "There can be no doubt that the '753 patent describes an operative invention. I have directly tested the circuit described in the '753 patent and demonstrate in data ... that two detected EMG signals on opposite hands can indeed have substantially the same amplitude and phase, and that a difference amplifier will then reduce those EMG signals to substantially zero."

114. "While an individual muscle fiber's electrical signal might be random, a skin contact sensor such as described in the '753 patent, can aggregate a multitude of electrical signals emitted by the muscle fibers that lie beneath the skin in the vicinity of the contact sensor. In addition, the contact sensor will react differently depending on its interconnections with an electronic circuit. The aggregate EMG signal detected by each of the surface electrodes on a subject's hands must be substantially the same in both amplitude and phase, in part due to the fact that the invention connects both hands to the same point of common potential and uses closely spaced electrodes under each hand. As a result, the EMG signals from two hands become substantially correlated and can be eliminated by a differential amplifier, just as the '753 patent describes. In other words, my testing demonstrates that the invention works precisely as

the '753 patent explains, and that the '753 patent contains a written description of the invention and the manner of making it to a clear level of detail sufficient to have enabled a person of ordinary skill in the art in 1992 to make the invention without any material experimentation required."

115. "In referring to the components of signals used as inputs of differential amplifiers, the term "in-phase" is often used to describe whether the amplitude of two signals is the same (or nearly-so), while synchronized in their zero-crossings. This term is indeed relevant in describing the timing of peaks and troughs between pure sinusoidal signals. For more complex signals (such as ECG and EMG), the term "in-phase" is accepted in the art as referring to two signals that have a synchrony in the times of their zero-crossing with amplitudes of the same polarity. "Out-of-phase" describes two signals with synchronized zero crossings but opposite polarity. This more general definition is accepted by persons of ordinary skill in the art to characterize or quantify similarities/dissimilarities in either pairs of sine waves, or pairs of more complex noisy signals (e.g., ECGs and EMGs)".

116. "Consider two signals applied to the signal input ports of a difference amplifier:

Signal 1 = m1 + n Signal 2 = m2 + n

where n represents noise common to both signals and where m1 is the opposite of m2 (m1 = -m2). Because m1 and m2 are equal and opposite signs, they both reach zero amplitude at the same time (timings of their zero crossings are the same) but they do so moving in opposite directions. As a result the signal pair is referred to as being out of phase. By defini-

tion, a differential amplifier is designed to amplify the difference (by a factor A) and reduce the sum of the inputs by a factor B, much smaller than A. In other words, the difference between ml and m2 will be greatly amplified by a factor A."

117. "On the other hand, the common signal n will not be amplified and instead pass through the amplifier with a gain B much smaller than A (usually B = 1). In order to further eliminate noise "n", that noise must also be carried on a reference electrode connected to what is referred to as a "common reference port" on the differential amplifier. Using the common reference signal, the differential amplifier compares the input signals to the reference signal, and substantially rejects the noise component to the extent they are common. Because differential amplifiers process signals based on the instantaneous amplitude (reflecting the polarity, timing of zero crossing, and magnitude), and not necessarily the more limited characteristics of a sine wave, it is improper in the context of differential amplifiers, to limit the definition of phase to that used in sine waves. Rather, a more general definition of phase magnitude ... is commonly understood by persons of ordinary skill in the art to apply to the operation of differential amplifiers".

118. "While it is common to speak of the "rejection" or "elimination" of noise by a differential amplifier, persons of ordinary skill in the art understand that complete elimination is never achievable due to physical limits in electronic components. Shared noise (i.e., common mode) will always 'leak' through on the output of any differential amplifier, and this is characterized by what is referred to in the art as the common-mode-rejection-ratio (CMRR)."

119. "The CMRR is defined as the ratio of the difference gain over the sum gain, (or A/B above). Typical bio-applications require a CMRR of 10,000 - 100,000; while the common mode is typically of gain 1. With such high CMRR, one can see why one skilled-in-the-art refers to a 'substantially zero' response to common signals on the two terminals, simply because it is substantially smaller than the response to opposite signals on the two terminals. This does not and is never expected to mean that the noise component will be attenuated to perfect zero by the differential amplifier."

120. "As a result, amplification of desired signals, and relative attenuation (rejection) of undesired signals is dependent on appropriate selection of recording sites and circuit connections. Desired signal components should appear with opposite polarity on the two differential amplifier input ports, while noise (i.e., undesired signals) should appear of substantially equal magnitude (amplitude) and phase on the same two input ports, and on the common reference port. The location of the reference electrode and its connection to the amplifier circuit will therefore also influence the nature of common signals on the two input signals amendable to cancellation."

121. "Someone of ordinary skill in the art of biosignal acquisition would recognize differential amplifier 23 in the '753 patent as a bioamplifier."

122. "In 1992, a person of ordinary skill in the art of biosignal acquisition would have known that a bioamplifier contains three stages for the detection of a desired signal: a differential amplifier to improve the saliency of a desired signal above the 'noise' (read unwanted) signals, a band-pass filter that removes unwanted low-frequencies caused by such factors as

electrode drift and high frequencies not related to the signals of interest, and a final additional amplification of the 'clean' signal to levels required by the monitoring device and application."

123. "In the context of the '753 patent, the desired signal is the ECG, specifically the rate of occurrence of the peak of the "R" wave. The unwanted signals include the 60Hz electrical noise, and muscle EMGs that can vary with movement. It would be reasonable for one skilled in the art to select the first stage of an instrumentation amplifier with bandwidth of about at least 1 kHz, to pass all of the **EKG** waveform, and allow proper rejection of common signals in the bandwidth of undesired EMG signals (up to at least 500 Hz with surface electrodes). A second stage would further filter and amplify the result to restrict the signal to the **EKG** bandwidth (e.g., .05-100 Hz), and remove any electrode drift, and residual electrical noise and residual EMG above the bandwidth. The final stage varies with the application, and in the case of pulse rate detection would apply a band pass filter to isolate the peak of the R wave (e.g., centered around about 17 Hz). In the case of the '753 patent, the last two stages can be applied simultaneously, with a bandpass filter depicted in the patent Fig. 2."

124. With the mock up of the invention of the '753 patent tested by Dr. Galiana, she found that the detected EMG from the two live electrodes must have substantially the same magnitude and phase, since a substantially zero EMG component appeared in the output of the difference amplifier.

125. "A difference amplifier subtracts signals that are substantially the same, thereby removing unwanted signals. Thus, to determine the similarity

of input signals, one need only look to a difference amplifier's output. Since a difference amplifier reduces to substantially zero input signals that are of substantially equal magnitude and phase, my observation of substantially zero EMG signal at the output of the difference amplifier definitively establishes that the input EMG signals were of substantially equal magnitude and phase. On the other hand, the output of the difference amplifier produces an amplified ECG signal confirming that the ECG detected by the two live electrodes was in phase and of opposite polarity."

126. Dr. Galiana stated that the recitation in claim 1 that the left and right EMG's have "substantially equal magnitude and phase" does not require any particular percentage of similarity. She further stated that, "The proper interpretation of that term, as would be understood by one of ordinary skill in the art, is that the signals should be similar enough to achieve a substantially zero EMG output..."

127. "Just as is illustrated in Figure 2 of the '753 patent, the electrical circuit that I tested includes an elongate member with four contact sensors (two for each hand). One outer contact sensor for each hand was connected to an input of the difference amplifier. The two internal contacts from the two hands were connected to a point of common potential, as illustrated in Figure 2 of the patent. A three channel oscilloscope was connected to both the inputs and the output of the differential amplifier for comparison purposes. An actual image of the oscilloscope traces... demonstrates operation of the invention."

128. To the best of my knowledge and belief, the tests were performed with the subject comfortably

and symmetrically holding but not strongly grasping the electrodes, and the oscilloscope traces from her Report and mentioned below, are reproduced in **Exhibits 12 and 13**.

129. "Signals 1 and 2 (i.e., the top two traces identified by the numerals 1 and 2 at the left side of the screen) contain the combined ECG, EMG, and ambient noise from right and left hands (outer electrodes) before the signals enter the differential amplifier. As can be seen, the first and second signals appear to be random noise. It is impossible to discern an ECG signal from either of the right and left hand contact sensor signals. The same is not true of the third signal at the output of the differential amplifier. In the third trace, the differential amplifier outputs an ECG signal containing substantially no EMG noise. This is the result of the differential amplifier canceling the EMG noise and amplifying the ECG signal just as described in the '753 patent. A depiction of a clean ECG signal..., demonstrates how little noise actually remains... . The residual EMG noise is so negligible compared to the ECG signal under measurement that EMG does not interfere at all with the ability to detect the peaks of the R waves. As a result, the residual EMG noise is referred to in the art as being "substantially zero." **(Exhibit 12).**

130. "In addition, in 1992, many electrical engineers were still using analog oscilloscopes in which a "flying dot" moved across the screen without leaving a trace. When that common oscilloscope is used, it is much more difficult to visually detect small deviations from an expected trajectory. Because the EMG signal is reduced to substantially zero by the invention, a person of ordinary skill in the art in 1992 viewing a "flying dot" on an analog oscilloscope

would have had a difficult time discerning appreciable deviation from the expected ECG signal, and would have characterized the EMG as substantially zero. Moreover, a person of ordinary skill in the art in 1992, implementing the patent, would have understood the difference amplifier depicted by reference numeral 23 in Figure 2 to be bioamplifier, which by definition, includes filtering to isolate the signal of interest, i.e., the ECG signal."

131. "As a matter of elementary biosignal processing, it is known that the bandwidth of an ECG signal does not typically extend beyond 150 Hz, while that of an EMG signal can reach over 1000 Hz, and for heart rate applications, the bandwidth can be as low as 20Hz. As a result, a person of skill in the art attempting to enhance an ECG for purposes of counting heartbeats, would choose a bioamplifier configured for ECG amplification (e.g., including build-in filtering to restrict the bandwidth to that of the ECG and amplify as needed.) When such filtering is applied..., the substantially zero EMG approaches absolute zero." **(Exhibit 13)**

132. "Because the circuit was built in rough fashion on a "bread board", I expect the residual noise in the traces ...to be higher than if built in a more permanent manner on a printed circuit board. The ability of even a rough circuit to cancel EMG to the level illustrated in the above traces demonstrates the effectiveness of the underlying principles of the invention."

Summary of Testing

133. The testing that Dr. Galiana and I performed demonstrates that the device disclosed in the '200 patent could not detect first and second electro-

myogram signals *of substantially equal phase and magnitude* so that when these first and second electromyogram signals are applied to the first and second terminals of the difference amplifier *the first and second electromyogram signals will be subtracted from each other to produce a substantially zero electromyogram signal at the output of the difference amplifier,* whereas the device as described in the '753 patent does perform in this manner. This can be shown in part with reference to the Table in **Exhibit 14** based on actual measurements I made in April, 2009.

134. The measured ECG/EMG ratios of the '200 device model for relaxed holding, non-relaxed holding, and grasping are 10.5, 1.10, and 0.875 whereas the corresponding ratios for the EMG balanced device are 50, 10, and 3.3.

135. An ECG/EMG ratio of 2 could be considered as acceptable in order to accurately process heart rate. For the non-relaxed holding and grasped conditions associated with exercising, the 753 model device shows ratios of about 10 and 3, whereas the model of the '200 device shows ratios of about 1.

136. An ECG/EMG signal to noise ratio in the range of about 3-10 would be manifested at the output of the differential amplifier of Figure 2 of the '753 patent, as having a substantially zero influence from the EMG.

137. An ECG/EMG signal to noise ratio of about 1 or less associated with '200 device would be manifested at the output of the differential amplifier of Figure 2 of the '753 patent, as masking the ECG signal and thus requiring filtering after the differential amplifier.

138. Although the ECG/EMG ratio for the model of the 200 device while held with relaxed hands can provide acceptable heart rate measurements, this situation does not arise in association with exercise apparatus or exercise procedures. If the handle is held while exercising, the grip pressure will correspond to the "grasping" in the last data column of the above table. If the handle is held while pausing during or immediately at the conclusion of an exercise procedure, the muscles of the body are not calm enough to provide the relaxed holding in the first data column of the table. In this situation, the handle would most likely be held in the non-relaxed manner corresponding to the second data column of the table. The ECG/EMG ratios in the first data column would be expected from a subject truly at rest, not from a subject during or immediately after exercise.

139. Since the main purpose of a heart rate monitor for use in association with exercise is to inform the user of the heart rate during exercise, especially the peak heart rate, any post-exercise monitor will inherently provide only an indirect measure of what the heart rate was during exercise. Due to the masking effects of EMG, this was a common technique as of 1992, but even if the device of the '200 patent were used in this manner, it would suffer the deficiencies of both an indirect measure and the inability to provide a strong enough ECG/EMG ratio as shown in the second data column above.

140. To my knowledge, only baton or handle type monitors that use my Invention can provide ECG/EMG ratios associated with exercise, which are high enough to produce substantially zero EMG signal at the output of the differential amplifier.

I hereby declare that all statements made herein of my own knowledge are true and that all statements made on information and belief are believed to be true; and further that these statements were made with the knowledge that willful false statements and the like so made are punishable by fine or imprisonment or both under Section 1001 of Title 18 of the United States Code and that such willful false statements may jeopardize the validity of the application or any patent issued thereon.

s/ Date: *06/12/2009*

Gregory Lekhtman

EXHIBIT 14

The amplitude of EMG and ECG in Micro-volts	**Relaxed holding baton monitor**	**Non-relaxed holding baton monitor**	**Grasping baton monitor**
ECG amplitude at the output of differential amp. '200 device	1050	1050	1050
ECG amplitude at the output of differential amp. '753 device	1000	1000	1000.
EMG amplitude at the output of differential amp '200 device	100	950	1200
ECG amplitude at the output of differential amp '753 device	20	100	300

ECG/EMG ratio '200 device	**10.5**	**1.105**	**0.875**
ECG/EMG ratio '753 device	**50**	**10**	**3.3**

United States Patent [19]

Fujisaki et al.

[11] **4,444,200**

[45] **April 24, 1984**

[54] HEART PULSE RATE MEASURING SYSTEM

[75] Inventors: **Iwao Fujisaki,** Ichikawa; **Shuichi Kosuge,** Tama; **Syuu Ogawa,** Kasukabe; **Kimihiko Sato,** Funabashi; **Toshimi Soeda,** Tokyo, all of Japan

[73] Assignee: **Senoh Kabushiki Kaisha,** Tokyo, Japan

[21] Appl. No.: **299,578**

[22] Filed: **Sep. 4, 1981**

[51] Int. Cl.[3] **A61B 5/04**

[52] U.S. Cl. **128/706**

[58] Field of Search 128/639, 690, 702, 706, 128/707, 708, 710

[56] **References Cited**

U.S. PATENT DOCUMENTS

3,802,698	4/1974	Burian et al.	128/707
3,868,947	3/1975	Holsinger	128/639
4,007,731	2/1977	Griffiths et al	128/710
4,083,366	4/1978	Gombrich et al.	128/706

4,221,223	9/1980	Linden	128/706
4,224,948	9/1980	Cramer et al.	128/690
4,237,903	9/1980	Hofmann	128/708
4,319,581	3/1982	Cutter	128/707

Primary Examiner—William E. Kamm

Attorney, Agent, or Firm—Lowe, King, Price & Becker

[57] ABSTRACT

A heart pulse rate measuring system comprises a casing, a pair of rod-shaped grip sensors extending outwardly from the opposite sides of the casing for sensing a heart pulse signal, and an electric circuit for calculating a heart pulse rate from the sensed heart pulse signal. Each of the grip sensors is composed of two conductive cylindrical electrodes arranged in an axially aligned relationship and electrically insulated from each other for obtaining a pulse rate utilizing the potentials at four points in a user's body. The electric circuit includes a differential amplifier, having a ground connection to one of the two electrodes of each sensor and two inputs for the remaining electrodes. A filter is used to eliminate noise from the output of the differential amplifier, and a computer calculates the heart rate from the output of the filter. Additionally, an AC-DC converter is connected between the differential amplifier and the computer for providing a DC signal to the computer when an output is provided by the differential amplifier. The computer responds to a predetermined DC level by starting a display indication of heart pulse rate. A timer is provided for use of the system with an exercise device and an alarm is activated at the

expiration of the preset exercise time or if pulse rate deviates beyond upper or lower limits preset therefor. A printer provides a printout of time and/or pulse rate at predetermined time intervals.

5 Claims, 3 Drawing Figures

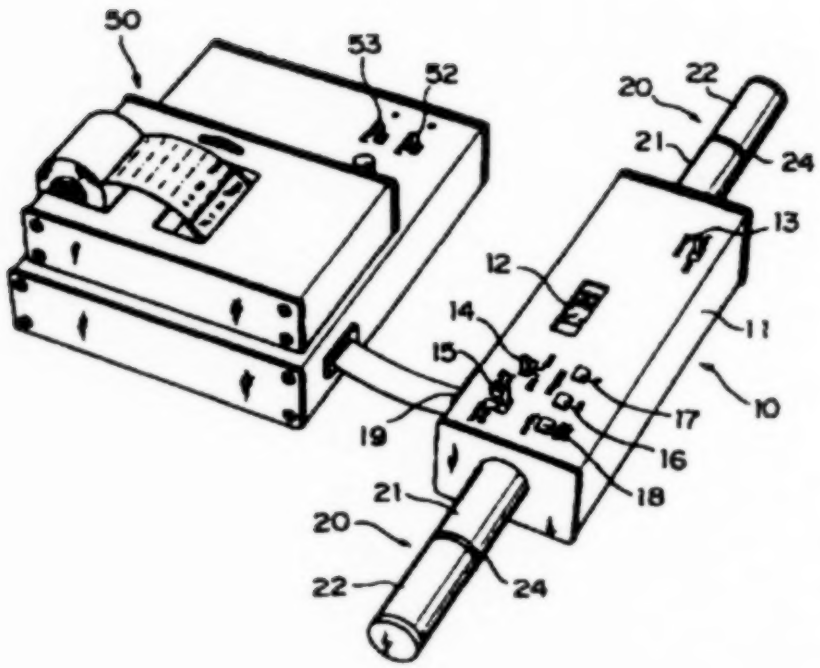

U.S. Patent Apr. 24, 1984 Sheet 1 of 3 4,444,200

FIG. 1

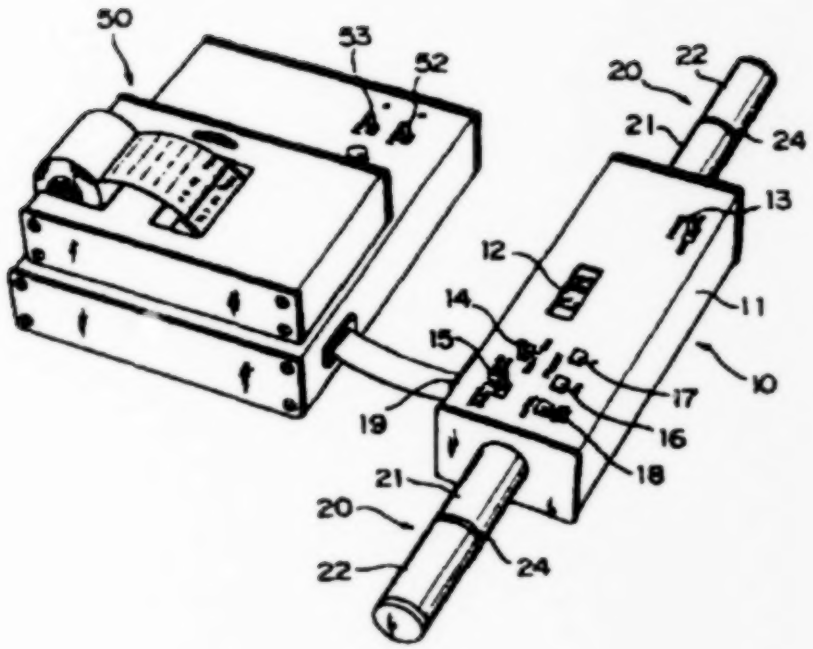

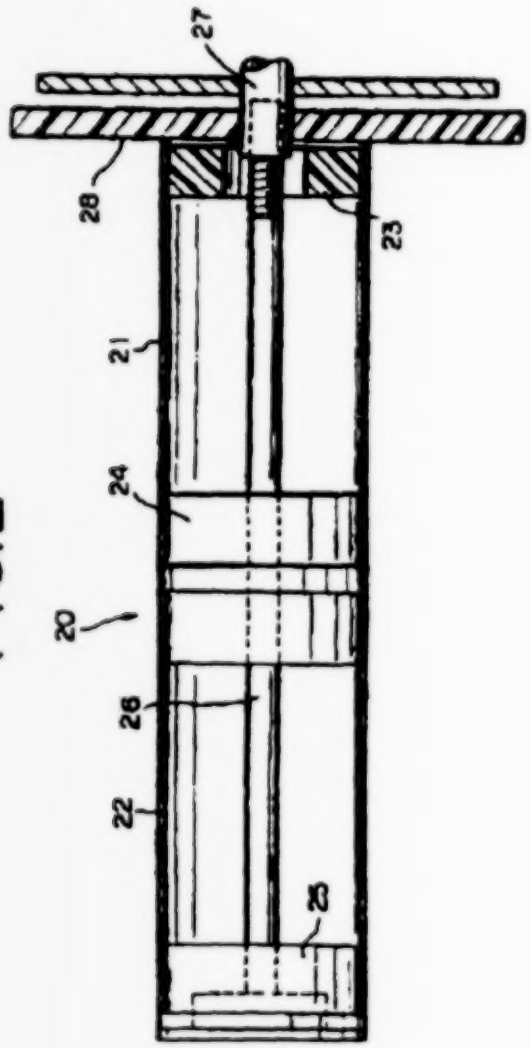

FIG.2

FIG. 3

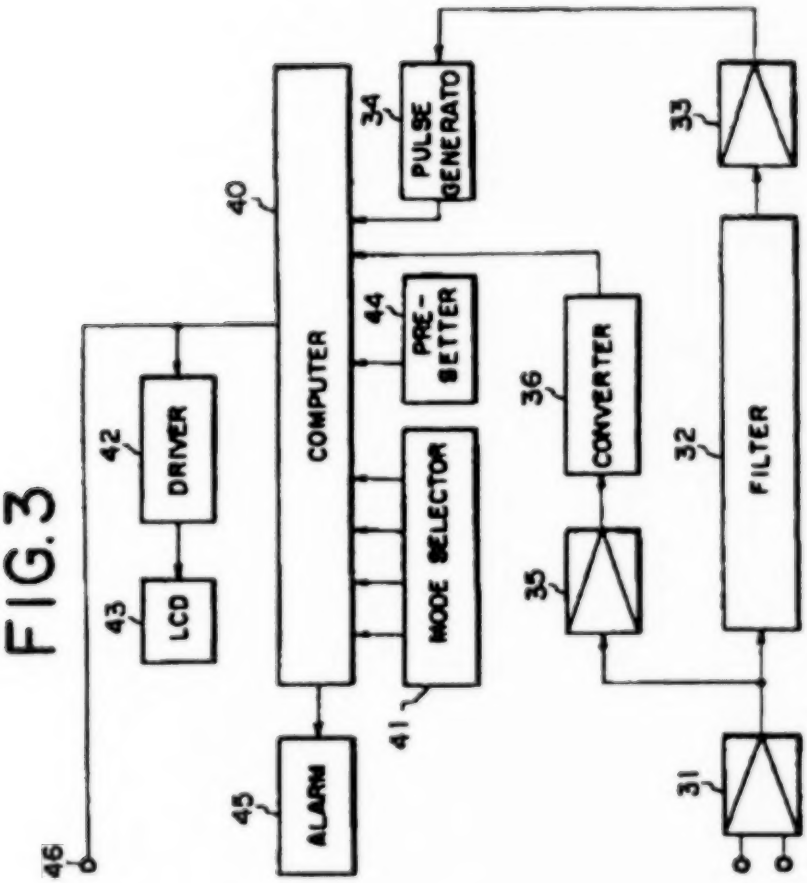
COMPUTER
40
PULSE GENERATO
34
PRE-SETTER
44
MODE SELECTOR
41
DRIVER
42
LCD
43
ALARM
45
46
CONVERTER
36
35
FILTER
32
33
31

HEART PULSE RATE MEASURING SYSTEM

BACKGROUND OF THE INVENTION

This invention relates to a system for measuring heart pulse rate and, more particularly, to such a heart pulse rate measuring system having a pair of grip sensors adapted to be gripped with both hands for sensing heart pulse signals.

During an exercise, skeletal muscles are used and heart beats become faster so that more blood is pumped to replace nutrients in the skeletal muscles. For finding out how much exercise a person's body can take or his fitness level, it is important to get an accurate reading of his heart function. Heart beats produce a heart pulse signal which is relatively independent of person's movements, external temperature and other environment conditions. In order to get information on such heart function, it is common practice to measure heart pulse rate based upon such a heart pulse signal by using heart pulse signal sensors attached directly on several points of a person's body near his heart and connected through long wires to a separate measuring unit. However, this has been found to be insufficient in heart pulse rate measuring accuracy penalty and inconvenience attendant upon attachment and detachment of the sensors from the person's body.

The present invention provides a simple heart pulse rate measuring system which can make an accurate indication of heart pulse rate in a very short time simply by gripping grip sensors with both hands.

SUMMARY OF THE INVENTION

There is provided, in accordance with the present invention, a heart pulse rate measuring system which comprises a casing, a pair of rod-shaped grip sensors extending outwardly from the opposite sides of the casing for sensing a heart pulse signal, an electric circuit contained in the casing for calculating a heart pulse rate from the sensed heart pulse signal, and a display unit associated with the electric circuit for displaying the calculated heart pulse rate. Each of the grip sensors is composed of two conductive cylindrical electrodes arranged in axially aligned relationship and electrically insulated from each other. The electric circuit includes a differential amplifier having inputs from the grip sensors for amplifying the difference between the heart pulse signals applied thereto from the grip sensors, a filter circuit having an input from the differential amplifier for eliminating noises from the heart pulse signal applied thereto from the differential amplifier, a pulse generator having an input from the filter circuit for generating a rectangular pulse signal corresponding to the heart pulse signal applied thereto from the filter circuit, and a digital computer for counting pulses of the pulse signal fed thereto from the pulse generator and calculating a heart pulse rate.

Preferably, the electric circuit includes an alarm unit, and means for presetting upper and lower limit values for the calculated heart pulse rate into the digital computer. The digital computer is adapted to cause the alarm unit to provide a warning alarm when the calculated heart pulse rate exceeds the preset upper limit value or falls below the preset lower limit value.

BRIEF DESCRIPTION OF THE DRAWINGS

The present invention will be described in greater detail by reference to the following description taken in connection with the accompanying drawings, in which:

FIG. **1** is a perspective view showing one embodiment of a heart pulse rate measuring system made in accordance with the present invention, the system comprising a center unit and a digital printer;

FIG. **2** is a sectional view showing one grip sensor used in the heart pulse rate measuring system of FIG. **1**; and

FIG. **3** is a block diagram showing an electric circuit used in the center unit.

DESCRIPTION OF THE PREFERRED EMBODIMENT

Referring now to FIG. **1**, there is illustrated one embodiment of a heart pulse rate measuring system made in accordance with the present invention. The system comprises a center unit **10** and a digital printer **50** associated with the center unit **10**.

The center unit **10** comprises a casing **11** formed in its upper surface with a window **12** through which a liquid crystal display is exposed to view. The casing **11** supports on its upper surface a power switch **13**, first and second mode selection switches **14** and **15**, upper and lower digit preset buttons **16** and **17**, and an initial button **18**. The first mode selection switch **14** is movable between its RUN and SET positions, and the second mode selection switch **15** is movable between its PULSE and TIMER positions. The upper digit preset button **16** is used to select two upper digits and the lower digit preset button **17** is used to se-

lect one lower digit. The initial button **18** is used to register the selected numbers in a memory of a digital computer to be described later and also to start a timer included in the digital computer. The casing **11** supports on its side surface a connector **19** for connection to the digital printer **50**. A pair of rod-shaped grip sensors **20** extends outwardly from insulating panels **28** secured on the opposite end surfaces of the casing **11**.

As shown in FIG. **2**, each of the left- and right-hand grip sensors **20** has inner and outer cylindrical electrodes **21** and **22** which are made of a conductive material, such as for example, stainless steel. The inner electrode **21** is bonded at its inner end on a support ring **23** and at its outer end on one shoulder of a spacer **24**. The outer electrode **22** is bonded at its inner end on the other shoulder of the spacer **24** and at its outer end on the shoulder of an end cap **25**. A bolt **26** extends through the end cap **25**, the spacer **24**, and the support ring **23** and threadedly engaged with a nut **27** secured in the insulating plate **28** so as to secure them to the end surface of the casing **11**. The support ring **23**, the spacer **24**, and the end cap **25** are made of an insulating material, such as for example, plastic. In such a manner, the inner and outer cylindrical electrodes **21** and **22** are arranged in axially aligned relationship and electrically insulated from each other. The inner and outer electrodes **21** and **22** are connected to an electric circuit to be described later through separate electric cords extending therefrom into the casing **11**.

When a person grips the left- and right-hand grip sensors **20** with both hands, preferably with the center of his palms covering the spacers **24** between the inner and outer electrodes **21** and **22**, the inner and

outer electrodes **21** and **22** catch heart pulse signals caused by heart beats together with AC hum and human body hum (hereinafter referred merely to as noises).

Referring to FIG. **3**, there is illustrated an electric circuit, which is generally designated at **30**, contained in the casing **11** of the center unit **10**. The electric circuit **30** includes a differential amplifier **31** which has its one input coupled to the outer cylindrical electrode **22** of the left-hand grip sensor **20**, the other input thereof being connected to the outer cylindrical electrode **22** at the right-hand grip sensor **20**. The inner cylindrical electrodes **21** of the left- and right-hand grip sensors **20** are coupled to the ground terminal of the differential amplifier **31**. The differential amplifier **31** amplifies the difference between the voltages applied to the inputs thereof. This is effective to reduce the noises introduced into the heart pulse signals fed to the differential amplifier **31** from the grip sensors **20**. The output of the differential amplifier **31** is then coupled to a filter circuit **32** which further reduces or eliminates the noises still included in the heart pulse signal from the differential amplifier **31**. The output of the filter circuit **32** is fed through an amplifier **33** to a pulse generator **34** which generates a rectangular pulse signal related to the pulse signal from the amplifier **33**. That is, the pulse generator **34** provides a train of pulses corresponding to the heart beats of the person.

The electric circuit **30** also comprises a digital computer **40** operable in several modes one of which is selectively set by a mode selector **41** comprised of the first and second mode selection switches **14** and **15**. If the first mode selector switch **14** is in its RUN position and the second mode selection switch **15** is

in its PULSE position, the digital computer **40** is placed in a pulse rate measuring mode to count the pulses from the pulse generator **34** and calculate the heart pulse rate, which corresponds to the rate of heart beats occurring in a minute, within five or six seconds. The digital computer **40** provides a command signal to a driver **42** which thereby makes an indication of the calculated heart pulse rate on a liquid crystal display **43**. When the first mode selector switch **14** is in its RUN position and the second mode selection switch **15** is in its TIMER position, the digital computer **40** operates as a timer and indicates, on the liquid crystal display **43**, the elapsed time at every second after the initial button **18** is depressed once. When the initial button **18** is depressed twice, the time display stops and keeps on displaying the value. When the initial button **18** is depressed for the third time, the time indication returns to zero.

The digital computer **40** may be associated with a presetter **44**, which is comprised of the upper and lower digit present buttons **16** and **17** and the initial button **18**, for presetting upper and lower limit values for calculated heart pulse rate. The upper limit value may be preset at the maximum heart pulse rate above which it will become dangerous to continue to exercise. The lower limit value may be selected at the minimum heart pulse rate below which the exercise will not achieve the desired effects. The digital computer **40** is placed in its first preset mode of operation if the first mode selection switch **14** is placed in its SET position and the second mode selection switch **15** is placed on its PULSE position. Under this condition, the upper and lower values can be preset separately by continuously depressing the upper and lower digit preset buttons **16** and **17** until desired numbers for the upper and lower limit values

appear on the liquid crystal display **43** and then depressing the initial button **18** to register the numbers in the memory of the digital computer **40**.

The digital computer **40** is placed in its second preset mode of operation when the first mode selection switch **14** is in its SET position and the second mode selection switch **15** is in its TIMER position. Under this condition, a desired exercise time can be preset by continuously depressing the upper and lower digit preset buttons **16** and **17** until desired numbers for the desired exercise time appear on the liquid crystal display **43** and thereafter depressing the initial button **18** to register the number in the memory of the digital computer **40**.

When the calculated pulse rate exceeds the preset upper limit value, the calculated pulse rate falls below the preset lower limit value, or the elapsed exercise time exceeds the preset value, the digital computer **40** provide a warning signal to an alarm **45** which thereby provides a warning alarm such as sounding a buzzer.

The output of the differential amplifier **31** is also coupled through a tough-sensor amplifier **35** to an AC-DC converter **36** and hence to the digital computer **40**. The AC-DC converter **36** converts the AC signal from the differential amplifier **31** into a corresponding DC signal. In response to the DC signal from the AC-DC converter **36**, the digital computer **40** makes a determination as to whether or not any person grips the grip sensors **20** with his both hands. This may be used to start operation of the digital computer **40** to make a heart pulse rate indication when it detects any person gripping the grip sensors **20**.

The command signal from the digital computer **40** to the driver **42** is also coupled to an output terminal **46** for connection to the digital printer **50**. The digital printer **50** contains therein a timer (not shown) for printing out, on a tape **51**, the values displayed on the liquid crystal display **43** together with the elapsed exercise time provided by the timer at a predetermined time interval. The reference numeral **52** designates a power switch, and the numeral **53** designates a print start switch.

The operation of the heart pulse rate measuring system of the present invention will now be described. Assuming first that a person desires to know his heart pulse rate during or immediately after an exercise, he turns the first mode selection switch **14** to its RUN position and the second mode selection switch **15** to its PULSE position. When he grips the grip sensors **20** with his both hands, heart pulse signals are applied to the inputs of the differential amplifier **31**. The output of the differential amplifier **31** is applied through the filter circuit **32** and the amplifier **33** to the pulse generator **34**. The heart pulse signal applied from the amplifier **33** to the pulse generator is free from noises. The pulse generator **34** converts the heart pulse signal into a corresponding rectangular pulse signal which is fed to the digital computer **40**. The digital computer **40** counts the pulses from the pulse generator **34** and calculates a heart pulse rate within five or six seconds. The calculated heart pulse rate is displayed on the liquid crystal display **43** through the driver **42**. The calculated heart pulse rate is also printed out by the digital printer **50** with the elapsed exercise time at a predetermined time interval.

If upper and lower limit values for heart pulse rate and a desired value for elapsed exercise time are previously preset by the use of the presetter **44**, the alarm **45** will provide a warning alarm when the calculated pulse rate exceeds the preset upper limit value, the calculated pulse rate falls below the preset lower limit value, or the elapsed exercise time exceeds the preset value.

There has been provided, in accordance with the present invention, a simple heart pulse rate measuring system capable of making an accurate indication of heart pulse rate in a very short time simply by gripping grip sensors with both hands. While the present invention has been described in conjunction with a specific embodiment thereof, it is evident that many alternatives, modifications and variations will be apparent to those skilled in the art. Accordingly, it is intended to embrace all alternatives, modifications and variations that fall within the spirit and broad scope of the appended claims.

What is claimed is:

1. An apparatus for measuring the heart pulse rate of a user, comprising:

(a) a casing;

(b) a pair of rod-shaped grip sensors extending outwardly from the opposite sides of said casing, each of said grip sensors being composed of first and second cylindrical conductive electrode means arranged in axially aligned relationship and electrically insulated from each other for sensing a heart pulse signal utilizing potentials at four points on the user's body, obtained when the user grips both

of said first and second electrode means of each said grip sensor with one hand; and

(c) an electric circuit contained in said casing, said electric circuit including:

a differential amplifier having a common ground electrically connected to said first conductive electrode means of each of said grip sensors and a pair of additional inputs respectively electrically connected to said second electrode means of each of said grip sensors for providing an output corresponding to a difference between the heart pulse signals from said grip sensors;

a filter circuit means having an input from said differential amplifier for eliminating noises from the heart pulse difference signal applied thereto from said differential amplifier;

a digital computer means responsive to an input from said filter circuit means for calculating a heart pulse rate;

a display means associated with said digital computer means for displaying the calculated heart pulse rate;

an AC-DC converter connected between said differential amplifier and said digital computer means for converting an AC signal from said differential amplifier into a corresponding DC signal; and

said digital computer means including means sensitive to the DC signal from said AC-DC converter for causing said display

means to start displaying the calculated heart pulse rate thereon.

2. The apparatus of claim 1, wherein said electrical circuit includes an alarm unit connected to said digital computer means and means for presetting upper and lower limit values for the calculated heart pulse rate into said digital computer means, and wherein said digital computer means includes means for causing said alarm unit to provide a warning alarm when the calculated heart pulse rate exceeds the preset upper limit value or falls below the preset lower limit value.

3. The apparatus of claim 2, wherein said electric circuit includes means for presetting a desired exercise time into said digital computer means, and wherein said digital computer means includes means for causing said alarm unit to provide a warning alarm when the elapsed exercise time exceeds the preset exercise time.

4. The apparatus of claim 1, which further comprises a digital printer means associated with said digital computer means for printing out the calculated heart pulse rate at predetermined time intervals.

5. The apparatus of claim 4, wherein said digital printer means contains a timer for printing out the calculated heart pulse rate together with elapsed exercise time.

* * * * *

(12) **EXPARTE REEXAMINATION CERTIFICATE** (7853rd)

United States Patent

Lekhtman

(10) **Number: US 5,337,753 C1**

(45) **Certificate Issued: Nov. 9, 2010**

---

(54) **HEART RATE MONITOR**

(75) Inventor: **Gregory Lekhtman**, Montreal (CA)

(73) Assignee: **Biosig Instruments Inc.**,
Montreal, Quebec (CA)

Reexamination Request:

No. 90/010,366, Dec. 19, 2008
No. 90/010,612, Jul. 17, 2009

Reexamination Certificate for:

Patent No.: **5,337,753**
Issued: **Aug. 16, 1994**
Appl. No.: **07/895,936**
Filed: **Jun. 9, 1992**

(51) **Int. Cl.**

A61B 5/024 (2006.01)
A61B 5/0408 (2006.01)
A61B 5/0245 (2006.01)
A61B 5/22 (2006.01)

(52) **U.S. Cl.** **600/519**; 600/520

(58) **Field of Classification Search** ..... None
See application file for complete history.

(56) **References Cited**

US PATENT DOCUMENTS

4,051,522	A	9/1977	Healy et al.
4,233,965	A	11/1980	Fairbanks
4,248,244	A	2/1981	Charnitski et al.
4,444,200	A	4/1984	Fujisaki et al.
4,898,182	A	2/1990	Hawkins et al.

OTHER PUBLICATIONS

Goldman and Klatz, *The "E" Factor;* pp. 240-247; 1988.

Specimen of U.S. Trademark Registration No. 1,156,243; 4 pp.; registered Jun. 2, 1981.

Strong; *Biophysical Measurements;* pp. 264-295; Jun. 1971.

U.S. Trademark Registration No. 1,156,423 to Biosig Inc., Jun. 2, 1981.

De Vel, "R-Wave Detection in the Presence of Muscle Artifacts," *IEEE Transactions on Biomedical Engineering,* vol. BME-31, Nov. 1984, pp. 715-717.

Thakor, "Electrical Interference in Biopotential Recording," *Encyclopedia of Medical Instrumentation,* 1988, pp. 1014-1017.

Trademark Specimen, dated Nov. 14, 1978, filed by Biosig Instruments.

Primary Examiner—Alexander J Kosowski

(57) **ABSTRACT**

An elongate hollow cylindrical member houses electronic circuitry and has disposed on its surface, on either end, a live electrode and a spaced common

electrode. The electronic circuitry includes a difference amplifier, and electromyogram signals detected by the electrodes are applied to opposite polarity inputs of the difference amplifier. As the electromyogram signals are of substantially equal amplitude and phase, the electromyogram signals will be subtracted from each other in the difference amplifier to provide a substantially zero output due to electromyogram signals at the output of the difference amplifier. However, electrocardiograph signals, being of opposite phase, will be added in the difference amplifier so that the output of the difference amplifier is substantially due to only the electrocardiograph signal.

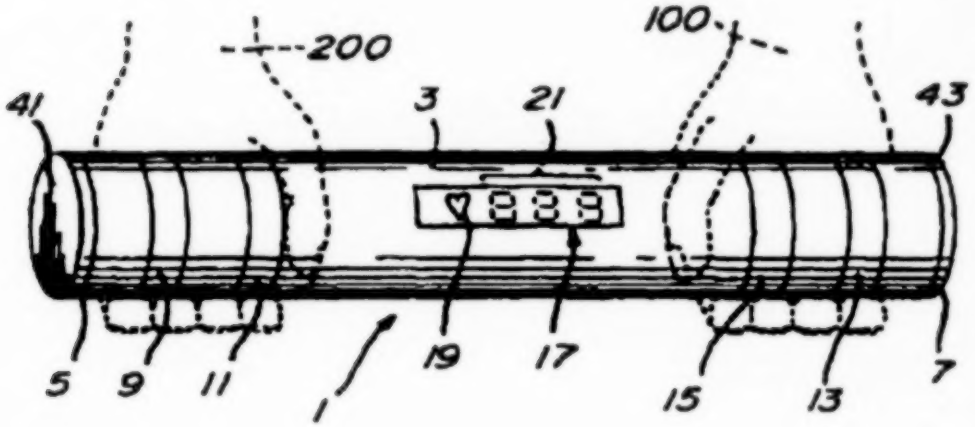

EX PARTE REEXAMINATION CERTIFICATE ISSUED UNDER 35 U.S.C. 307

NO AMENDMENTS HAVE BEEN MADE TO THE PATENT

AS A RESULT OF REEXAMINATION, IT HAS BEEN DETERMINED THAT:

The patentability of claim **1-16** is confirmed.

* * * * *

UNITED STATES DISTRICT COURT FOR THE SOUTHERN DISTRICT OF NEW YORK

BIOSIG INSTRUMENTS, INC., Plaintiff. v. THE NAUTILUS GROUP, INC., Defendant.	Case No. 04 CIV. 6654 (AKH)

EXPERT REPORT OF HENRIETTA GALIANA, Ph.D

I, Henrietta Galiana, Ph.D, have been retained by counsel for Biosig Instruments, Inc. to act as an expert witness in this lawsuit. I expect to testify regarding the matters and opinions stated in this report, if asked about these matters and opinions by the Court or by the parties' attorneys.

I. SUMMARY

1. I am the chairman of the Department of Biomedical Engineering at McGill University, and have served on the University faculty since 1984, after receiving a Ph.D in Electrical Engineering (focused in Biomedical Engineering.) I have spent most of my

career studying biosignal acquisition and processing, working primarily with non-invasive surface electrodes. Surface electrodes are conductive materials that when placed on the skin of a subject, can be used to detect muscle activity (EMG), eye movements (EOG), brain activity (EEG), or electrical heart signals (ECG or EKG). Over the course of my career, I have measured and analyzed these types of signals in many different contexts—as a researcher, in a peer review capacity, as a participant and organizer of conferences, and as a supervisor of post graduate theses research and post doctoral fellows.

2. As part of my work on this matter, I studied U.S. Patent No. 5,337,753 (the '753 patent; Exhibit 1), the records of the communications with the Patent Office during the patenting process, the report of Dr. Joseph Dyro relating to the '753 patent, among the other documents and things referred to in this Report.

3. I believe that the '753 patent describes the patent's invention in a manner enabling a person of ordinary skill in the art to readily make the invention. Indeed, I handed the patent's Figure 1 and 2 alone (schematic circuit diagram) to one of my research assistants, and within two hours he built a working model of the very aspects of the invention that Dr. Dyro's report alleges to be unworkable.

4. The '753 patent describes an operative invention. Following the direction of the patent, my research assistant readily built a working model of the invention which substantially reduces to zero biosignals (EMG) emitted by the two hands of a subject and noise from external interference, while amplifying electrical signals (ECG) emitted by the subject's heart.

5. I studied the expert report of Dr. Dyro and considered his deposition testimony, and disagree with his theoretical conclusion that the '753 patent describes neither an operative invention, let alone one that could be made by a person of ordinary skill in the art from a reading of the patent. My testing of a working model of the invention built by my research assistant, establishes that the invention is in fact operative, and that the patent's description is sufficiently detailed to permit the invention to be reconstructed in a reasonable time by a person of ordinary skill in the art, and without the need for any significant experimentation.

6. Dr. Dyro's theoretical conclusions appear to me to be based on unsupported assumptions. For example, he states that EMG emitted from two hands of a subject will be amplified, not reduced by a differential amplifier. I attach data to this report demonstrating exactly the opposite occurs when following the instructions in the patent. That is, my testing demonstrates *that with the circuit connections in the patent*, the EMG from both hands and from electrical power noise are both reduced to substantially zero by the differential amplifier.

7. While an individual muscle fiber's electrical signal might be random, a skin contact sensor such as described in the '753 patent, can aggregate a multitude of electrical signals emitted by the muscle fibers that lie beneath the skin in the vicinity of the contact sensor. In addition, the contact sensor will react differently depending on its interconnections with an electronic circuit. As my test results demonstrate, the aggregate EMG signal detected by each of the surface electrodes on a subject's hands must be substantially the same in both amplitude and phase,

in part due to the fact that the invention connects both hands to the same point of common potential and uses closely spaced electrodes under each hand. As a result, the EMG signals from two hands become substantially correlated and can be eliminated by a differential amplifier, just as the '753 patent describes. In other words, my testing demonstrates that the invention works precisely as the '753 patent explains, and that the '753 patent contains a written description of the invention and the manner of making it to a clear level of detail sufficient to have enabled a person of ordinary skill in the art in 1992 to make the invention without any material experimentation required.

II. EDUCATION AND EXPERIENCE

8. I have been involved in the fields of electrical and biomedical engineering since 1961, when I began studying electrical engineering at McGill University in Montreal, Canada. In 1966, I received an undergraduate degree in Electrical Engineering, (Honors Stream), from McGill, and thereafter spent two years as a biomedical engineering research assistant in McGill's Electrical Engineering Department, and three years as a research staff engineer at the Massachusetts Institute of Technology (M.I.T.). After taking time off to raise a family, I returned to McGill in 1977 as a doctoral student in Biomedical Engineering. I received a Ph.D in Biomedical Engineering from McGill in 1981, and spent the next three years as a Post-Doctoral Fellow at McGill's Aerospace Medical Unit in the Department of Physiology. In 1984, I became an Assistant Professor in the Department of Biomedical Engineering, and the next year was given Associate Memberships in McGill's Departments of Electrical Engineering and Otolar-

yngology (OTL). I was promoted to full professor in 1994, and in 2007 was appointed Chair of the Biomedical Engineering Department.

9. My accomplishments in the field of biomedical engineering were recognized by the Institute of Electrical an Electronics Engineers (IEEE) when it conferred upon me the status of IEEE Fellow in 2002, which according to IEEE standards is conferred by the Board of Directors in recognition of "unusual distinction in the profession" and "an extraordinary record of accomplishments." (Appendix 2) In any given year, the distinction of Fellow is conferred upon no more than one tenth of one percent of the membership.

10. A major area of my expertise is in biosignal acquisition and processing. (understanding how the human body generates and transmits electrical signals, and how to detect, process and record those signals). My curriculum vitae is attached as Appendix 3 to this Declaration. I believe that I have considerable experience that is directly pertinent to the issue of how the '753 patent processes electrocardiograph (ECG) and electromyogram (EMG) signals and an appreciation of how the invention of the '753 patent works.

11. In the course of my undergraduate and graduate training, I studied courses in electrical engineering, mechanical engineering, electrophysiology, physiology, circuit theory and analysis, physics, statistics, and signal processing.

12. I was involved in designing and I teach graduate level courses in bioinstrumentation, biomedical engineering, and modeling and identification of biomedical systems. These courses involve detection,

measurement, and processing of biosignals, including ECG and EMG, among others.

13. In the course of graduate level research supervision, I routinely guide the design of test protocols for biosignal data acquisition, for calibrating the devices involved, and for evaluating the resulting data. For example, I am involved in supervising graduate work involving fetal monitoring of ECG during childbirth. This requires the extraction of a small fetal ECG against the background of the mother's muscle noise during contractions and the mother's ECG. I have also become involved in projects outside the University. Also, in collaboration with The Montreal Children's Hospital, I am currently involved in investigating methods to process noisy signals from neonatal respiration monitors, to robustly identify episodes of potentially deadly apnea. We have already developed robust automated algorithms to detect the presence of apnea in the presence of movement artifacts (EMG noise), and to provide an early warning to the nursing staff I have presented lectures worldwide and published scientific articles that involve the processing and interpretation of various types of biosignals for the better understanding of processes in physiological systems, leading to relevant bio-system models and their application to clinical screening.

14. Throughout my career, I have regularly used differential amplifiers to process and record biosignals, to eliminate unwanted signals and enhance signals of interest. I am very familiar with the use of differential amplifiers.

15. This is the first time that I have been retained to serve as an expert in any legal proceeding.

16. I am a past president of the IEEE Engineering in Medicine & Biology Society, (EMBS) and this year received EMBS's 2008 Career Service Award. I am also the Associate Editor of IEEE Transactions on Neural Systems and Rehabilitation Engineering (TNSRE) and an *ad hoc* reviewer for multiple neuroscience and movement control journals.

17. I am a Fellow of the Engineering Institute of Canada, and I serve on grant review committees for the Natural Sciences and Engineering Research Counsel (NSERC, Canada) and the Canadian Institutes for Health Research (CIHR), and served on the U.S.'s National Science Foundation's review Panel for Collaborative Research in Computational Neuroscience (2008).

A. INFORMATION CONSIDERED

18. The documents that I reviewed and rely upon are cited in this report. In forming the opinions that are expressed in this report, I have relied on the information in these documents, those provided by Dr. Dyro, as well as my own general knowledge. At trial, I may also present demonstrative exhibits to illustrate my testimony. I have attached as Appendix 4 a more comprehensive list of documents I considered or reviewed in the preparation of this report.

B. THE LEVEL OF ORDINARY SKILL IN THE ART

19. For purposes of this analysis, I accept Dr. Dyro's statement of a person of ordinary skill in the art in 1992, assuming that person had a minimum competence in the nature of biosignals and their acquisition.

C. OPINIONS TO BE EXPRESSED AND THE BASES AND REASONS THEREFORE

20. I have studied the expert report of Dr. Dyro, and believe that his conclusions about lack of operability of the '753 invention, lack of enablement, and lack of written description are incorrect.

21. There can be no doubt that the '753 patent describes an operative invention. Dr. Dyro's opposite conclusion is based on the incorrect premise that EMG signals detected by surface electrodes on opposite hands of a subject can not be substantially equal to each other in phase and amplitude, and as a result will be amplified rather than reduced by a differential amplifier. While Dr. Dyro expresses a theory, I have directly tested the circuit described in the '753 patent and demonstrate in data included in this report (as discussed later in greater detail) that two *detected* EMG signals on opposite hands can indeed have substantially the same amplitude and phase, and that a difference amplifier will then reduce those EMG signals to substantially zero. This result is attributed to the interconnection of four electrodes (two for each hand) with a differential amplifier as described in the '753 patent.

III. BACKGROUND

A. Basic Principles of Differential or Difference Amplifiers

22. In referring to the components of signals used as inputs of differential amplifiers, the term "in-phase" is often used to describe whether the amplitude of two signals is the same (or nearly-so), while synchronized in their zero-crossings. This term is indeed relevant in describing the timing of

peaks and troughs between pure sinusoidal signals. For more complex signals (such as ECG and EMG), the tem "in-phase" is accepted in the art as referring to two signals that have a synchrony in the times of their zero-crossings with amplitudes of the same polarity. "Out-of-phase" describes two signals with synchronized zero crossings but opposite polarity. This more general definition is accepted by persons of ordinary skill in the art to characterize or quantify similarities/ dissimilarities in either pairs of sine waves, or pairs of more complex noisy signals (*e.g.*, ECGs and EMGs) (Appendix 5).

23. Consider two signals applied to the signal input ports of a difference amplifier:

Signal1 = m1 + n Signal2= m2 + n

where *n* represents noise common to both signals and where m 1 is the opposite of m2 (ml = -m2) Because ml and m2 are equal and of opposite signs, they both reach zero amplitude at the same time (timings of their zero crossings are the same) but they do so moving in opposite directions. As a result the signal pair is referred to as being *out of phase*. By definition, a differential amplifier is designed to amplify the difference (by a factor A) and reduce the sum of the inputs by a factor B, much smaller than A. In other words, the difference between ml and m2 will be greatly amplified by a factor A.

24. On the other hand, the common signal *n* will not be amplified and instead pass through the amplifier with a gain B much smaller than A (usually B= 1). In order to further eliminate noise 'n', that noise must also be carried on a reference electrode connected to what is referred to as a "common reference port" on the differential amplifier. Using the com-

mon reference signal, the differential amplifier compares the input signals to the reference signal, and substantially rejects the noise component to the extent they are common. Because differential amplifiers process signals based on the instantaneous amplitude (reflecting the polarity, timing of zero crossing, and magnitude), and not necessarily the more limited characteristics of a sine wave, it is improper in the context of differential amplifiers, to limit the definition of phase to that used in sine waves. Rather, a more general definition of phase and magnitude (as referred to in ¶ 22 above) is commonly understood by persons of ordinary skill in the art to apply to the operation of differential amplifiers.

25. While it is common to speak of the "rejection" or "elimination" of noise by a differential amplifier, persons of ordinary skill in the art understand that complete elimination is never achievable due to physical limits in electronic components. Shared noise (*i.e.*, common mode) will always 'leak' through on the output of any differential amplifier, and this is characterized by what is referred to in the art as the common-mode-rejection-ratio (CMRR) Appendix 6.

26. The CMRR is defined as the ratio of the difference gain over the sum gain, (or A/B above). Typical bio-applications require a CMRR of 10,000-100,000; while the common mode is typically of gain 1. With such high CMRR, one can see why *one skilled-in-the-art refers to a 'substantially zero' response to common signals* on the two terminals, simply because it is substantially smaller than the response to opposite signals on the two terminals. This does not and is never expected to mean that the

noise component will be attenuated to perfect zero by the differential amplifier.

27. As a result, amplification of desired signals, and relative attenuation (rejection) of undesired signals is dependent on appropriate selection of recording sites and circuit connections. Desired signal components should appear with opposite polarity on the two differential amplifier input ports, while noise (*i.e.*, undesired signals) should appear of substantially equal magnitude (amplitude) and phase on the same two input ports, *and on the common reference port*. The location of the *reference* electrode and its connection to the amplifier circuit will therefore also influence the nature of common signals on the two input signals amenable to cancellation.

28. Dr. Dyro provides one example in his report (Dyro report, Figure 7, reproduced as Fig 2. A, below), which he relies on to support his view that a differential amplifier can only amplify EMG signals. *See* Dyro Report at ¶ 65. However, the circuit of Dyro's Figure 7 is designed for the *express purpose of amplifying*, not removing EMG signals. This is exactly the opposite purpose of the '753 patent which seeks to substantially *reduce* EMG.

29. I have reproduced below Dyro's Fig. 7, labeled as Fig. 1 A, and created my own modified version as Fig. 1 B for illustrative purposes. The purpose of the device in Fig. 1 A is to amplify the difference between EMGs detected at ml and m2. To do this, the author identifies the placement of the reference electrode on electrically "unrelated tissue". Because the tissue is unrelated, it will not carry any signals related to ml and m2, but it will carry environmental noise common to the noise in EMG1 and EMG2. As discussed earlier, the differential amplifi-

er will substantially cancel this common noise, and will only amplify the differential EMG signal (*i.e.*, m1-m2).

Fig. 1A

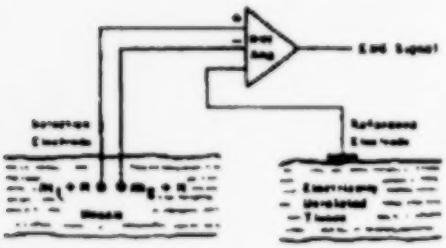

Fig. 1B

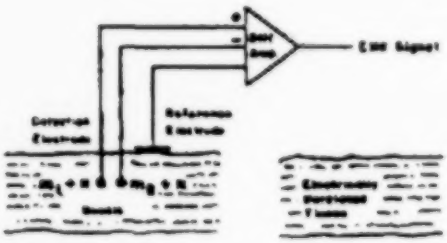

30. In contrast, the invention of the '753 patent places reference electrodes in close proximity to the signal electrodes on electrically "related tissue". Note that in Fig. 1 of the '753 patent, closely spaced signal and reference electrodes are gripped by the same hand (*i.e.*, electrically related tissue). As a result, the reference and signal electrodes will have a large common component (*i.e.*, common EMG), and that commonality will be treated as noise, substantially eliminated by the differential amplifier.

31. For Dr. Dyro's analysis to even begin to be pertinent, he would have had to consider the significance of the placement of the reference electrode in his Figure 7, and how the signal processing would change if the reference electrode were moved closer to the signal electrodes, such as I indicate in my modification to Dyro's Figure 7, in Figure 1 B.

32. As can be seen in Fig. 1 A, the author was attempting to reduce what is known as "cross talk" between the reference electrode and the biosignal electrodes. All of the applications that Dr. Dyro considered, like Fig 1 A above, presumed the absence of

cross talk between the reference electrodes and between the signal electrodes themselves. With the invention however, both of these types of cross talk are present (*i.e.*, because the contact electrodes are closely spaced on electrically related tissue, and because the common electrodes electrically link the two hands.). The role of reference signals in designing circuits is well known in the field of biosignal acquisition. *See, e.g.*, Appendix 7, Column 1, 11. 30-65.

1. ECG Characteristics

33. The heart achieves its pumping action by rapid and synchronized depolarization starting in the atria (SA node) and spreading to the ventricles (via highly compact and conductive fibers). Because the heart is not aligned in the center of the body and has a tilt leftward from apex to bottom, ECG potentials have opposite polarity, when observed on opposite sides of a line tilted from left shoulder to right thorax/waist Appendix 8. Thus, ECG signals will have opposite polarity in the two hands.

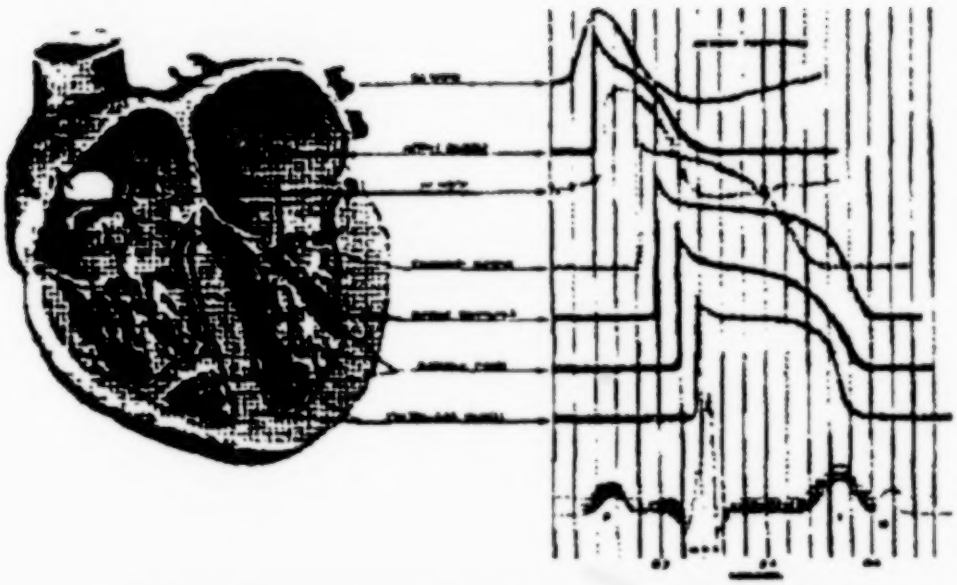

Figure 4.16 Representative electric activity from various regions of the heart. The bottom trace is a scalar ECG, which has a typical QRS amplitude of 1–3 mV. (© Copyright 1989 CIBA Pharmaceutical Company. Division of CIBA-GEIGY Corp. Reproduced, with permission, from *The Ciba Collection of Medical Illustrations*, by Frank H. Netter, M.D. All rights reserved.)

Figure 2: Spreading wave of activation in the heart, and association with peaks in the ECG. Lower ECG trace is contaminated by 60Hz power line noise.

34. Depending on the site, ECGs measured with surface electrodes will have amplitudes ranging from 1 mV to 10mV with a bandwidth of 0.05- 1 00Hz for standard 12-lead ECG Appendix 9.

35. A schematic of the portions of an ECG wave from (www.wikipedia.org/wiki/EKG) is accurate and is contained in Appendix 10, reproduced below. Every beat of the heart emits an electrical pulse causing a wave pattern known as an electrocardiogram (ECG) wave. Conventionally, the different portions of the ECG wave are identified by letters, as shown below. The figure below illustrates the key phases of

an ECG waveform, labeled as the P, QRS and T waves: these components are related to the state of activation in different parts of the heart, and are an integral part of the ECG, as opposed to noise.

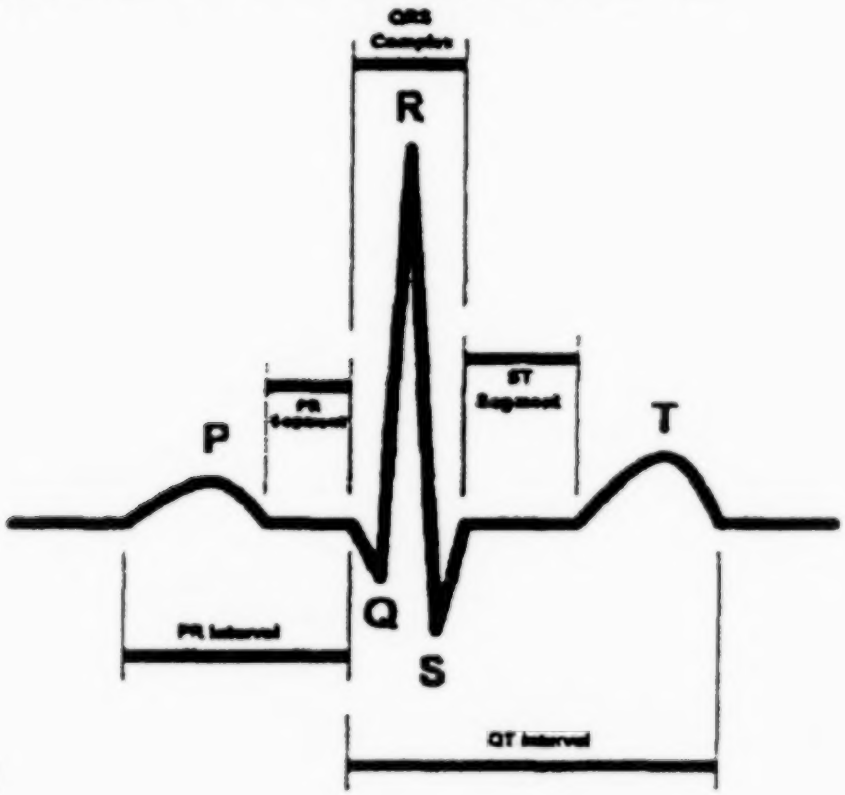

Fig. 3

The entire waveform is not needed to achieve high accuracy in all ECG applications. For example for simple monitoring of heart rate or pulse rate, only the "R" peak of the QRS complex is needed, since each R peak corresponds to one heart beat. Therefore, and as noted in the literature, while clinical applications require high fidelity in the range of 0.05-100 Hz, and intensive care units use devices with a fidelity of 0.50 - 50 Hz , a typical heart rate monitor only passes frequencies around 17 Hz with a strong resonance peak (Q factor). Appendix 11 [citing Tompkins 1993]. In other words, heart rate monitors

ignore most of the heart rate signal other than an area around the peak of the R wave.

36. All skeletal muscles, including hand muscles, emit their own electrical signals known as electromyograms (EMGs). As Figure 4 below illustrates, the EMG signal (red) can completely mask the peak of the R wave (black), making it difficult to differentiate the R wave peaks from the EMG noise.

Fig. 4

The significance of noise in an electronic signal is defined in terms of the signal under measurement. In Figure 4 above, since the EMG noise masks the ECG signal under measurement, the noise is considered significant. When EMG noise is so much lower than the R-wave peaks that the noise does not interfere with the ability of a circuit to detect the R wave

peaks, persons in the art commonly refer to the noise as "substantially zero."

2. Mathematical Simulation Demonstrating That Cross Talk Enables EMG Elimination

37. Dr. Dyro expresses an incomplete understanding of the nature of stochastic signals as they pertain to EMG. He does not believe that it would ever be possible to eliminate an EMG noise using a differential amplifier. My testing of a circuit constructed in accordance with the '753 sufficiently demonstrates otherwise. *See infra.* I have also used a mathematical simulation program (MATLAB) widely accepted by persons of ordinary skill in the art to demonstrate that even when two signals are completely random at their sources, cross talk between the signals at the electrode level will enable a differential amplifier to substantially cancel the noise (EMG).

38. As illustrated in Figure 5 below, I generated two uncorrelated random signals filtered to 300 Hz to emulate the bandwidth that characterizes EMG signals detected by surface electrodes. I label these two signals Surface EMG 1 and Surface EMG2, below, and assume first that there is no crosstalk between the electrodes' signals. Within each of EMG 1 and EMG2, I embedded small pulses of opposite polarity, simulating an R wave pulse. As illustrated below (Figure 5), these small pulses are completely masked by the random noise in Surface EMG 1 and Surface EMG2, consistent with Figure 4. The two signals are then processed by a differential amplifier, and the output appears in the bottom panel. As is evident, the differential amplifier simulation was unable to extract the pulse.

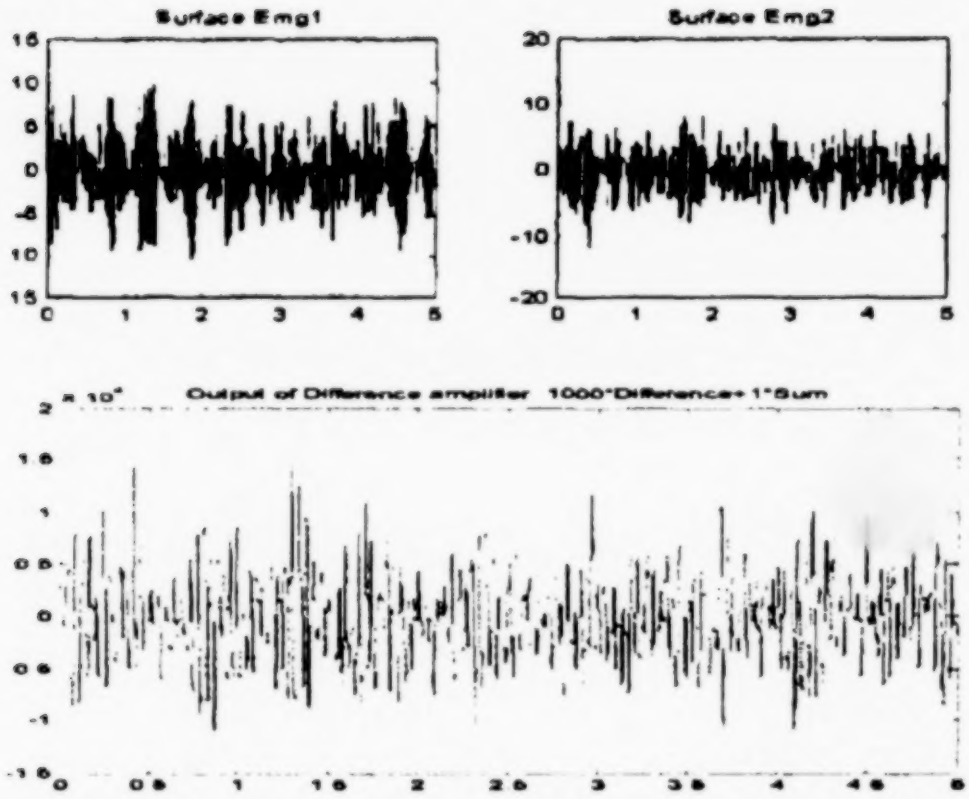

Figure 5: Two random signals with no correlation and no cross talk are not eliminated by a differential amplifier.

39. Subsequently, the same uncorrelated Signal EMG 1 and Signal EMG2 were processed to simulate the cross talk that would occur if surface electrodes measuring them were placed next to each other. As can be seen in Figure 6 below, the presence of cross talk is not readily detectable by visual inspection of the surface EMG signals - they still appear as random noise. However, this time, the differential amplifier simulation easily reduces the background EMG noise to reveal the previously hidden simulated R wave spike.

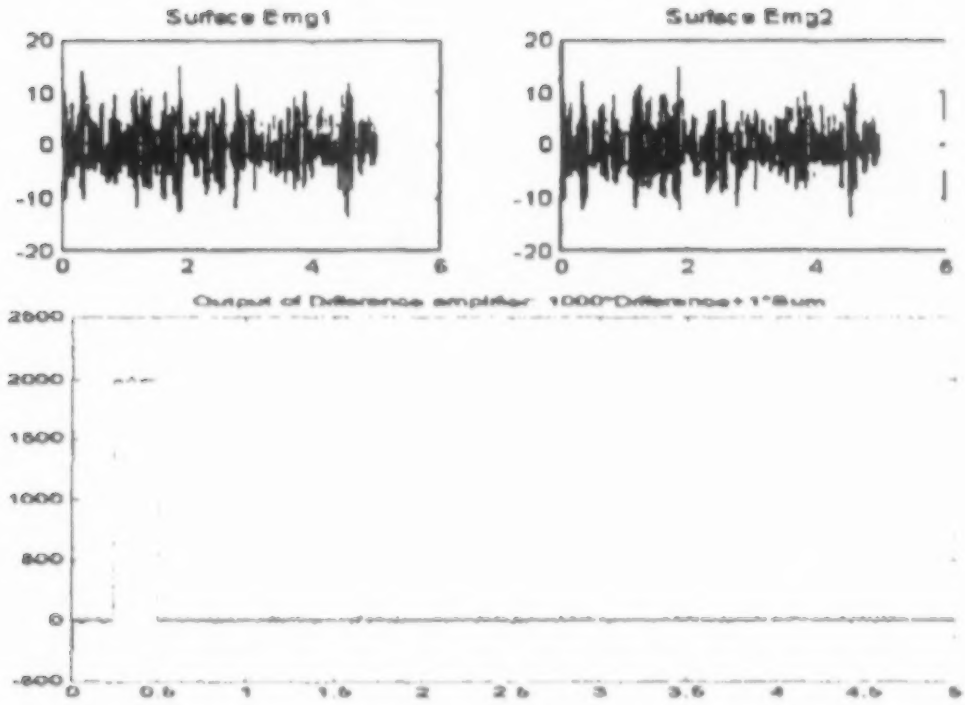

Figure 6: When two random signals have a significant component of correlation (cross- talk), the differential amplifier now can amplify and unmask a small pulse that was imbed in them with opposite sign, while rejecting the large noise levels seen in the top panels. (The same pulse was imbedded in Figure 5, but remained unseen).

40. Thus, Dr. Dyro's untested expectation that two EMG signals will always be amplified by a differential amplifier is wrong.

3. Other Factors Affecting Correlation between Detected EMG's

41. While the simulations in Figures 5 and 6 above assumed absolutely no correlation between the tissue sources, and assumed complete randomness as

a worst case scenario, in the real world, EMG signal sources are neither completely random nor completely uncorrelated. Appendix 18, p.24-26; Appendix 19, p. 390

42. Depending on its physical characteristics, a contact sensor grasped by a user simultaneously receives an aggregate of many electrical signals emitted from many muscle fibers beneath the skin in the range of the contact sensor, in a 3D volume. Thus, the contact sensor performs averaging that reduces randomness (low bandwidth noise has some autocorrelation).

43. In addition, if, as is illustrated in the '753 patent, contact sensors are located close together on electrically related tissue, there is cross talk between the sensors, as discussed earlier in this report, because their accessible 3D volumes overlap. Further, because the human body is a volume conductor, any two sites on the body where EMG is measured may also exhibit some component of co-modulation (common signal components) as the result of receiving similar motor neural drives from the brain (Appendix 12; see also any classical textbook on Neuroscience such as Kandel & Schwartz), and as the result of signal transmission between the electrodes through the conductance of tissue and skin. (Appendix 17).

44. Additionally there is the contribution of reflex loops and shared motor commands from the CNS and spinal cord in particular tasks (*e.g.*, gripping with both hands in the context of '753 patent). As a result of the brain's bilateral symmetry in movement control, when EMG is symmetrically detected on opposite sides of the body during a task that requires bilateral contraction of symmetrically disposed mus-

cle groups, those EMG signals will exhibit an increased synchrony in their timing (phase) and activation (amplitude) levels because they share a motoneural drive supported by symmetrical premotor circuits in the spinal cord. (Appendix 12 and Appendix 13).

45. It has also been demonstrated by early simulations that increased muscle fiber recruitment, associated with summation of a larger number of activation impulses under an electrode, can cause an increase in the probability of synchronous fiber activations and with it an increase in the EMG amplitude detected at the surface. Yet, little change in the dominant frequency of activity will be associated with the increased power in the EMG. (Appendix 13). So co-activation of muscle groups in a limb or across limbs is likely to also increase the common component in their EMG signals.

46. All the above comments are in the context of traditional EMG techniques, using two surface electrodes for each muscle, a separate differential amplifier for each EMG channel, and a shared reference on *unrelated* tissue. However when implementing the disclosure of the '753 patent, the reference is *deliberately* shared not only on related tissue, but also between the hands via a common reference connection. As a result, there will be even greater commonality beyond that which occurs through natural phenomena.

4. Bioamplifiers- Design in Presence of Biosignal Interactions

47. Someone of ordinary skill in the art of biosignal acquisition would recognize differential amplifier 23 in the '753 patent as a bioamplifier. Indeed, Dr.

Dyro acknowledged the same in his deposition. (Appendix 14 at p. 123).

48. In 1992, a person of ordinary skill in the art of biosignal acquisition would have known that a bioamplifier contains three stages for the detection of a desired signal: a differential amplifier to improve the saliency of a desired signal above the 'noise' (read unwanted) signals, a band-pass filter that removes unwanted low-frequencies caused by such factors as electrode drift and high frequencies not related to the signals of interest, and a final additional amplification of the 'clean' signal to levels required by the monitoring device and application. (Appendix 15).

49. In the context of the '753 patent, the desired signal is the ECG, specifically the rate of occurrence of the peak of the "R" wave. The unwanted signals include the 60Hz electrical noise, and muscle EMGs that can vary with movement. It would be reasonable for one skilled in the art to select the first stage of an instrumentation amplifier with bandwidth of about at least 1 kHz, to pass all of the EKG waveform, and allow proper rejection of common signals in the bandwidth of undesired EMG signals (up to at least 500 Hz with surface electrodes). A second stage would further filter and amplify the result to restrict the signal to the EKG bandwidth (e.g., .05-100 Hz), and remove any electrode drift, and residual electrical noise and residual EMG above this bandwidth. The final stage varies with the application, and in the case of pulse rate detection would apply a band pass filter to isolate the peak of the R wave (e.g., centered around about 17 Hz). In the case of the '753 patent, the last two stages can be applied simultaneously, with a bandpass filter depicted in the patent Fig. 2.

5. Implementation of invention as described in '753 Patent

50. With the invention of the '753 patent, the common electrodes of opposite hands are connected to a single common potential. (Appendix 1 at col 5, 11. 34-36). With this arrangement, I found that the detected EMG from the two live electrodes must have substantially the same magnitude and phase, since a substantially zero EMG component appeared in the output of the difference amplifier. (*i.e.*, A difference amplifier subtracts signals that are substantially the same, thereby removing unwanted signals. Thus, to determine the similarity of input signals, one need only look to a difference amplifier's output. Since a difference amplifier reduces to substantially zero input signals that are of substantially equal magnitude and phase, my observation of substantially zero EMG signal at the output of the difference amplifier definitively establishes that the input EMG signals were of substantially equal magnitude and phase.) On the other hand, the output of the difference amplifier produces an amplified ECG signal, confirming that the ECG detected by the two live electrodes was in phase and of opposite polarity. I disagree with Dr. Dyro's assertion that claim 1's reference to 2 EMGs with "substantially equal magnitude and phase" requires any particular percentage of similarity. I saw no such support for that assertion in the references he sites. The proper interpretation of that term, as would be understood by one of ordinary skill in the art, is that the signals should be similar enough to achieve a substantially zero EMG output, as described in paragraph 36 of this Report.

51. I demonstrated the foregoing principles using an electrical circuit corresponding to the one illus-

trated in Figures 1 and 2 of the '753 patent, which I recognize as an indication in the patent as how to make the invention work. Construction of this working model involved parts and miscellaneous materials available in our lab, costing less than $50, excluding the available power sources and oscilloscope. The focus was on the first stage of the patent diagram in Figures 1 and 2, since that is the part deemed to be unworkable by Dr. Dyro. Specifically, I tested the electrical circuit depicted in Appendix 16 to this report, and reproduced results in the photographs of Figure 7, below.

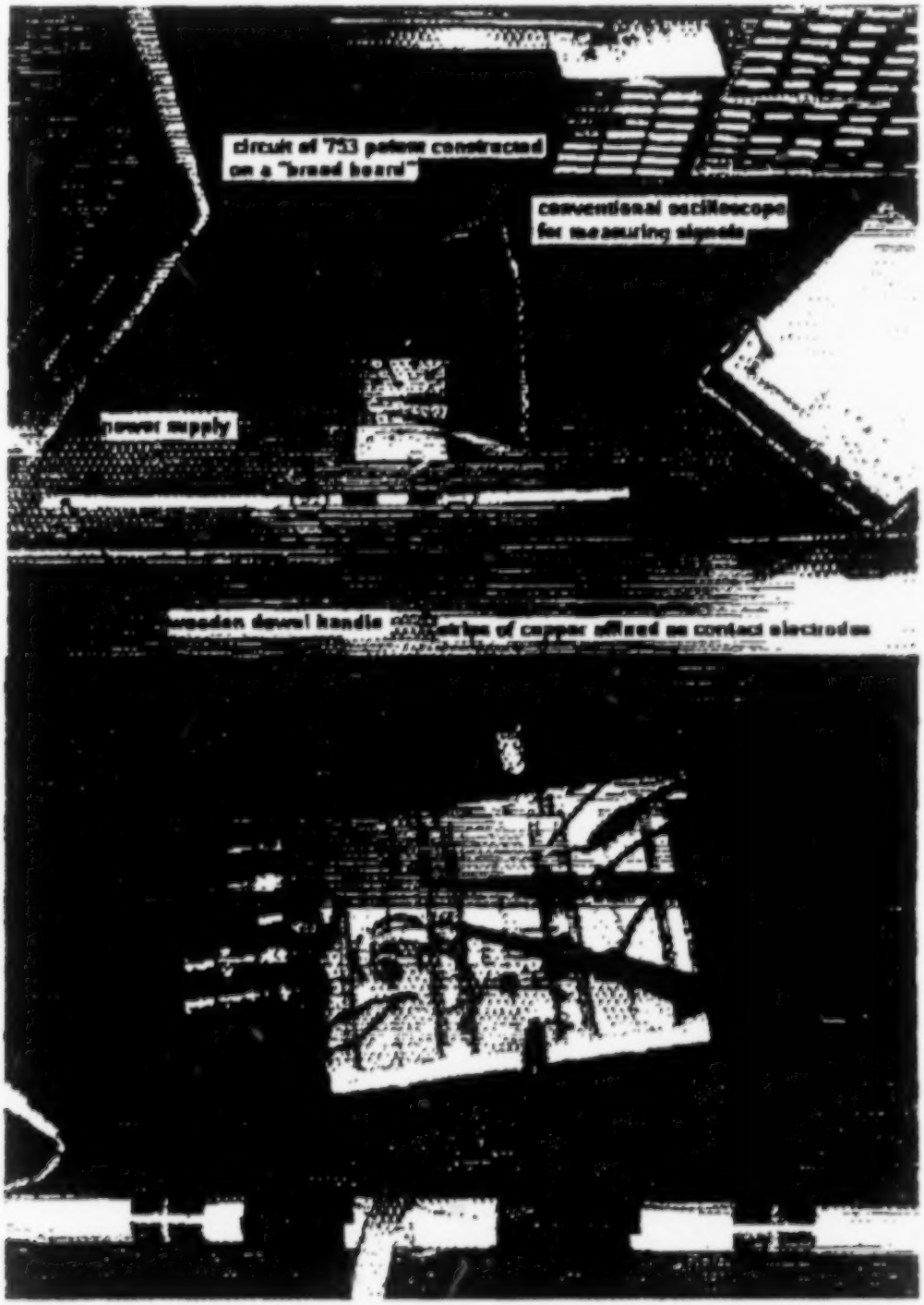

Figure 7: Photographs of the 'breadboard' implementation of the '753 patent, including a simple dowel arrangement for the 4 copper electrodes held by the two hands. The circuit was limited to that

part of Figure 2 in the patent representing electrode connections and the instrumentation (difference) amplifier.

52. The above-illustrated apparatus (Figure 7) was built by my lab assistant, at my direction. Specifically, I handed him Figures 1 and 2 of the '753 patent, and asked him to build the invention. Using a 7/8 inch broomstick-like wooden dowel, wire, copper foil, glue, and electrical tape, all found in our lab, he constructed the handle with wired contact electrodes, as illustrated above. He constructed the circuit using off-the-shelf components plugged into a conventional "bread board", all of which are common items found in our lab, and commonly available on the market. He then connected the circuit to an oscilloscope to enable me to monitor measured signals. He completed all this work in about two hours. I tested the invention immediately thereafter, and without any adjustment or revision, the apparatus worked just as described in the '753 patent.

53. While the circuit is unique to the extent I have not seen reference to it before working on this case, the construction of the circuit itself is quite simple. The pertinent portion of the circuit recited in claim 1 of the '753 patent is straightforward, requiring a single difference amplifier wired to four contacts on a handle. Based on my experience working with students and persons of ordinary skill in the art over the last 25 years, I have no doubt that using the '753 patent as a guide, the circuit could have been built within a matter of hours by a person of ordinary skill in the art in 1992, and without any significant experimentation.

54. Just as is illustrated in Figure 2 of the '753 patent, the electrical circuit that I tested includes an

elongate member with four contact sensors (two for each hand). One outer contact sensor for each hand was connected to an input of the difference amplifier. The two internal contacts from the two hands were connected to a point of common potential, as illustrated in Figure 2 of the patent. A three channel oscilloscope was connected to both the inputs and the output of the differential amplifier for comparison purposes. An actual image of the oscilloscope traces in Figure 8 below demonstrates operation of the invention. (red markings added for discussion purposes). These traces reflect normal operation of the circuit under normal conditions (with external noise controlled to ensure an unbiased analysis).

Figure 8: Inputs & Output of differential amplifier in the '753 patent

Figure 8: Inputs & Output of differential amplifier in the '753 patent

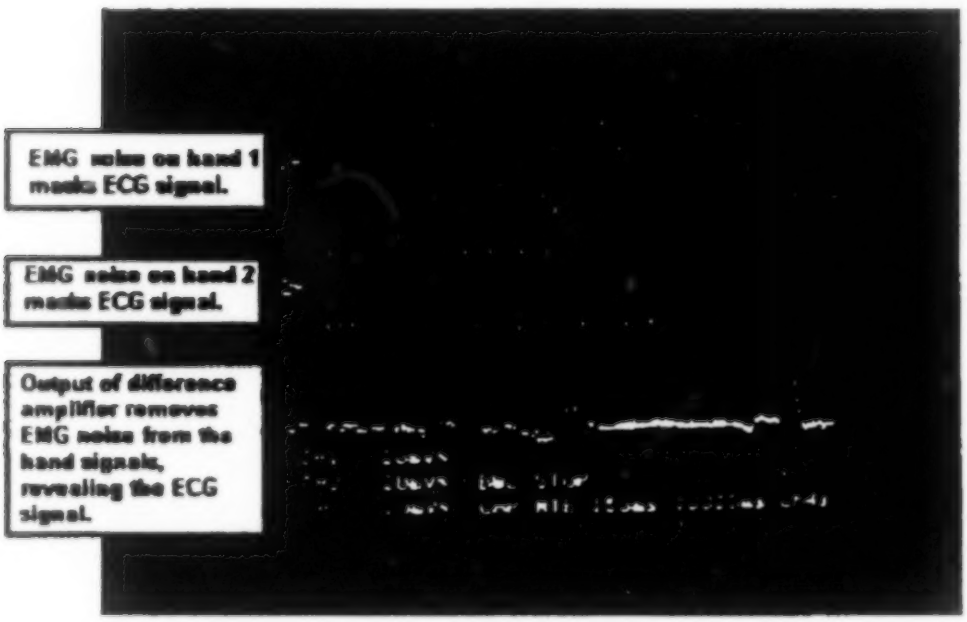

55. Signals 1 and 2 (*i.e.*, the top two traces identified by the numerals 1 and 2 at the left side of the screen) contain the combined ECG, EMG, and ambi-

ent noise from right and left hands (outer electrodes) before the signals enter the differential amplifier. As can be seen, the first and second signals appear to be random noise. It is impossible to discern an ECG signal from either of the right and left hand contact sensor signals. The same is not true of the third signal at the *output* of the differential amplifier. In the third trace, the differential amplifier outputs an ECG signal containing substantially no EMG noise. This is the result of the differential amplifier canceling the EMG noise and amplifying the ECG signal just as described in the '753 patent. A depiction of a clean ECG signal (superimposed as a red reference wave), demonstrates how little noise actually remains (the green bleeding above and below the red reference wave demonstrates the inconsequential amount of residual noise). The residual EMG noise is so negligible compared to the ECG signal under measurement that EMG does not interfere at all with the ability to detect the peaks of the R waves. As a result, the residual EMG noise is referred to in the art as being "substantially zero."

56. In addition, in 1992, many electrical engineers were still using analog oscilloscopes in which a "flying dot" moved across the screen without leaving a trace. When that common oscilloscope is used, it is much more difficult to visually detect small deviations from an expected trajectory. Because the EMG signal is reduced to substantially zero by the invention, a person of ordinary skill in the art in 1992 viewing a "flying dot" on an analog oscilloscope would have had a difficult time discerning appreciable deviation from the expected ECG signal, and would have characterized the EMG as substantially zero. Moreover, a person of ordinary skill in the art in 1992, implementing the patent, would have un-

derstood the difference amplifier depicted by reference numeral 23 in Figure 2 to be a bioamplifier, which by definition, includes filtering to isolate the signal of interest, *i.e.*, the ECG signal (¶¶ 46-47, *supra*; Appendix 14 at p. 207-08). As a matter of elementary biosignal processing, it is known that the bandwidth of an ECG signal does not typically extend beyond 150 Hz, while that of an EMG signal can reach over 1000 Hz., and for hea1i rate applications, the bandwidth can be as low as 20Hz (*see* ¶¶ 44-45, *supra*). As a result, a person of skill in the art attempting to enhance an ECG for purposes of counting heartbeats, would choose a bioamplifier configured for ECG amplification (*e.g.*, including built-in filtering to restrict the bandwidth to that of the ECG and amplify as needed.) When such filtering is applied, as is illustrated in the following traces in Figure 9, below, the substantially zero EMG approaches absolute zero. (The undulations in the third trace below are part of the ECG signal, not EMG).

Figure 9: Effect of Bioamplifier Filtering

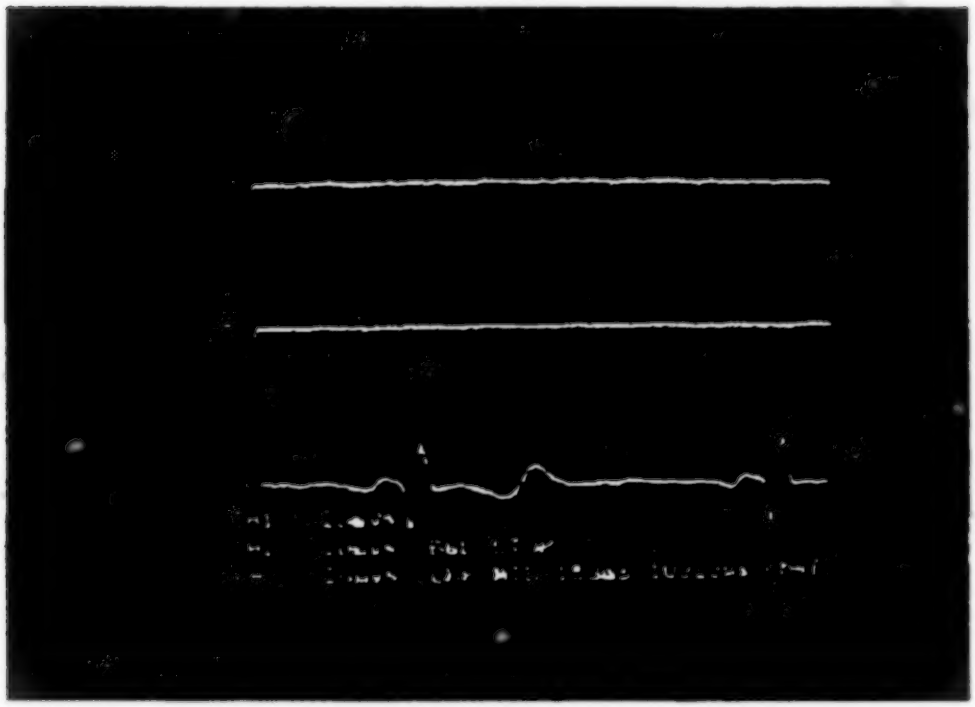

Because the circuit was built in rough fashion on a "bread board", I expect the residual noise in the traces illustrated above and in paragraph 54 to be higher than if built in a more permanent manner on a printed circuit board. The ability of even a rough circuit to cancel EMG to the level illustrated in the above traces demonstrates the effectiveness of the underlying principles of the invention.

57. In order to verify that the noise cancellation was not all attributable to 60Hz interference, I took the measurements of Figures 8 and 9 in a 'shielded' room at a nearby hospital. Such a room is surrounded by a copper mesh in the floor, walls, and ceiling, to block electromagnetic interference. Hence, in this case, the recorded input signals to the differential amplifier would be dominated by EMG activity. The output 'cancels' substantially the EMGs and highlights the desired ECG.

58. In any case, even at the immediate output of the differential amplifier before any filtering, the first oscilloscope image above demonstrates substantial elimination (reduction to zero) of unwanted EMG signals from the hands, leaving a clear ECG signal. I tested the circuit many times, and the traces above are generally reflective of my repeated testing. I also experimented with the circuit to see how changes might affect performance. When a reference point was chosen other than on related tissue, the output of the differential amplifier was noisy and ECG R waves were not readily discernable. The same result occurred when the two hands were not connected to a common reference point.

59. The device described in the '753 patent achieves the desired goal and is fully functional: it substantially reduces to zero the EMG signals from the hands, while amplifying the desired ECG signals.

60. Based on my experience in the field for over 20 years, my knowledge of the level of ordinary knowledge in the art, my review of the '753 patent, and my circuit testing and mathematical modeling as detailed in the preceding paragraphs of this report, I have no doubt that 1) the '753 patent describes an operative invention; 2) the description in the '753 patent is sufficiently detailed to have been fully understood by a person of ordinary skill in the art in 1992; and 3) the patent's description would have enabled a person of ordinary skill in the art in 1992 to make the invention in a matter of hours without significant experimentation required.

IV. DR. DYRO'S CONCLUSIONS ARE NOT SCIENTIFICALLY SOUND

61. I carefully considered Dr. Dyro's Report and reviewed all of the exhibits he relied upon. The exhibits he cites do not support his conclusions. There is no document in his report that even remotely suggest that if common electrodes on two hands are connected to a common source of potential that amplitude and phase of EMG signals from those two hands will not be correlated, enabling cancellation using a differential amplifier.

62. Dr. Dyro cites no reference for purposes of discussing the effects of connecting common electrodes on two hands to a point of common potential, despite that it is a feature of the '753 patent.

63. Dr. Dyro cites no reference for purposes of discussing the effects placing signal electrode and reference electrode on electrically related tissue, despite that it is a feature of the '753 patent.

64. I attended Dr. Dyro's deposition and heard him testify that he did not consider the effect of this common connection (Appendix 14 at p. 193), and did not consider the effect of placing the common and live electrodes on electrically related tissue. (Appendix 14 at p. 248). My testing demonstrates that these features have a significant impact on the signal out of the differential amplifier, and Dr. Dyro's failure to consider these features of the patent render his opinion unscientific and unreliable.

65. Moreover, sound engineering principles would require an engineer asked to evaluate the operability of a circuit-based device (such as described in the '753 patent) to first test the circuit before rendering opinions, particularly in this case where the

circuit's construction is quite simple enabling it to be built in a matter of hours with off-the-shelf parts. His failure to test is a departure from my understanding of accepted engineering practice.

66. There is no scientifically accepted methodology associated with the incorrect conclusion in Dr. Dyro's report that it is impossible to cause EMG signals to have substantially equal amplitudes and phase when the wiring of Figure 2 of the patent is followed, nor is there any scientifically accepted methodology in his report to support his incorrect conclusion that with the wiring illustrated in the patent, a substantially zero EMG signal can not be output from a difference amplifier.

67. I do not believe that the methodology of Dr. Dyro's report would be considered sound in the scientific community. It is not based on sufficient facts or data and it is not the product of reliable principles or methods. Rather, it is a statement of theoretical extrapolation not supported by the documents cited. It is purely speculative in its conclusions about how the invention of the patent would work, and is not grounded in science. Even when Dr. Dyro speculated in his deposition that the output of the differential amplifier in figure 2 of the '753 patent would amplify EMG, he was completely wrong, as my testing outlined in this report demonstrates.

V. MISCELLANEOUS

68. I am being compensated for my work on this matter at a rate of $400 per hour for all work I perform other than testifying. My compensation for testifying is $700 per hour. My compensation is not based on the outcome of this matter.

69. I reserve the right to amend or supplement this report based on further preparation in this action, including my review of any expert reports, expert testimony or any other reports and evidence submitted on behalf of Nautilus.

70. Attached hereto are true and correct copies of the Appendix references cited in this Report.

I make this declaration under penalty of perjury of the laws of the United States.

Dated: September 19, 2008

s/

Henrietta Galiana, Ph.D

UNITED STATES DISTRICT COURT
SOUTHERN DISTRICT OF NEW YORK

----------x

BIOSIG INSTRUMENTS, INC.,

Plaintiff

v. 10 CV 7722(AKH)

NAUTILUS, INC.,

Defendant.

----------x

New York, N.Y.
August 11, 2011
2:45 p.m.

Before:

HON. ALVIN K. HELLERSTEIN,
District Judge

APPEARANCES

BARROWAY TAPAZ
Attorneys for Plaintiff
BY: PAUL MILCETIC

HEIDELL PITTONI MURPHY & BACH
Attorneys for Plaintiff
BY: JOHN BONE

KLARQUIST SPARKMAN, LLP
Attorneys for Defendant
BY: JAMES GERINGER

NAUTILUS
Attorneys for Defendant
BY: ARK PORTER

JOHNSON GALLAGHER MAGLIERY, LLC
Attorneys for Defendant
BY: PETER J. GALLAGHER

[2] (Case called)

MR. MILCETIC: Paul Milcetic, of Barroway Topaz on behalf of Biosig, the plaintiff. And this is Mr. John Bone of Heidell Pittoni and he is also our local counsel behalf of the plaintiff.

THE COURT: Jenna Pellechia?

MR. MILCETIC: She went down to try to take care of a technical difficulty we're having.

THE COURT: When she comes back she's already been introduced.

MR. GERINGER: Good afternoon, your Honor. Jim Geringer, for Nautilus. With me is Mark Porter of Nautilus and Peter Gallagher, our local counsel.

THE COURT: How do you do?

MR. PORTER: Good afternoon, your Honor.

MR. GALLAGHER: Good afternoon, your Honor.

I have been given two books. Can he who presented this to me tell me what they are.

MR. MILCETIC: Your Honor, Paul Milcetic, on behalf of Biosig.

I think you are referring to the slides at that time parties –

THE COURT: Well, one loose leaf is Claimed Construction Hearing, referring to this.

MR. MILCETIC: Yes.

[3] THE COURT: That's the Nautilus presentation.

MR. MILCETIC: Nautilus presentation.

THE COURT: And then the other one –

MR. MILCETIC: Is the Biosig presentation.

THE COURT: I see.

MR. MILCETIC: And we've offered these paper copies for your benefit in part because I am not sure that, unless I on behalf of Biosig that we're going to be able to present slides, so if you could just follow along with the paper.

THE COURT: Well, here is what I think. Since we have a chart that gives me the language in the patent and the different assertions of how it should be interpreted, how the phrase should be interpreted let's go down phrase by phrase.

MR. MILCETIC: Sounds like a good idea, your Honor.

Would you like Biosig to start?

THE COURT: Well, the first phrase is a heart rate monitor for use by the user in association with exercise apparatus and/or exercise procedures comprising; and we'll stop there. I don't know that we need any interpretation, do we?

MR. MILCETIC: As far as Biosig –

THE COURT: Both agreed?

MR. GERINGER: Agreed, your Honor.

MR. MILCETIC: Agreed, your Honor.

THE COURT: And then it has an elongate member. So, Mr. Milcetic, what is an elongate member?

[4] MR. MILCETIC: Well, that's as we discussed I think at the last hearing, it's just simply a member or a rod or a stressed out member that you would, in the case of this invention, hold when you are exercising so that it would measure your heart rate. The parties have both agreed –

THE COURT: So you need two hands on it. So how about a rod sufficiently or cylinder – let's say cylinder – sufficiently wide so that the person whose heart rate will be monitored can fit both hands on the bar or on the cylinder; is that okay?

MR. MILCETIC: Your Honor, that's fine with Biosig as is what the parties agreed to here in this chart. Either one is fine with Biosig.

THE COURT: Does elongate mean a long handle in any meaning?

How do you feel about that, Mr. Geringer?

MR. GERINGER: I agree, your Honor. I would only suggest, perhaps, a cylinder sufficiently long so that a person whose heart rate will be monitored can grip the handle on both sides.

THE COURT: Good. Off the record.

(Discussion held off the record)

THE COURT: On the record.

MR. MILCETIC: Your Honor, on behalf of Biosig, the only thing I would mention on behalf of Biosig, your Honor, [5] is the concept of a cylinder. I don't know that it necessarily matters but we might just

want to refer to it – elongate member is a very broad term. It just refers to any –

MR. GERINGER: A cylinder or tube?

MR. MILCETIC: That's fine.

THE COURT: Well, we're not talking about two. We're talking about one.

MR. GERINGER: Tube, T-U-B-E.

THE COURT: Cylindrical tube?

MR. GERINGER: Sure.

THE COURT: Well, a cylinder can be a tube or I think it's enough to call it a cylinder.

MR. GERINGER: I don't foresee a lot of dispute on this point.

THE COURT: So we're past that. Then the next phrase electronic circuitry including a difference amplifier having a first interterminal of a first polarity and a second interterminal of a second polarity opposite the said first polarity. And the parties suggest that a difference amplifier is an electronic device that amplifies the difference between two cylinders.

MR. MILCETIC: Your Honor, on behalf of Biosig

—

THE COURT: Wait a minute.

(Pause)

THE COURT: I suggest the following: [6] Electronic circuitry having a difference or differential amplifier having the capability of measuring the difference in signal between each of two places for inputs.

MR. GERINGER: Your Honor, may I speak for Nautilus?

A diff amp doesn't just measure. It amplifies differences. It cancels what's the same. There can be a gain in a diff amp which we don't have to get into but measurement doesn't quite fit. It cancels what's the same and – I am sorry. It cancels what's the same. It amplifies the differences.

MR. MILCETIC: Your Honor, this is Paul Milcetic on behalf of Biosig. I would agree with what he just said. In other words, you might recall from the last hearing that the object or part of this invention is that you want to minimize your muscle signal so that it doesn't affect the accuracy of your heart rate. But you want to amplify the heart signal so that you can measure it accurately. So what the diff amp does is it will, as Mr. Geringer just pointed out, if two signals are the same it'll simply subtract them.

THE COURT: How about this? Electronic circuitry to cancel similarities and measure differences between each of two inputs on the cylinder.

MR. GERINGER: How about, to cancel similarities and amplify differences?

THE COURT: Good.

[7] MR. GERINGER: And we finish that sentence, your Honor, with to cancel similarities and amplify differences.

THE COURT: Between each of two inputs on the cylinder.

MR. MILCETIC: That's fine with Biosig.

MR. GERINGER: Agreed, your Honor.

THE COURT: And then the next set "elongate member".

MR. GERINGER: Your Honor, may I make a small suggestion?

THE COURT: Yes.

MR. GERINGER: On the cylinder might we say cylindrical handle simply because it gives people a better handle on what we're talking about?

THE COURT: It could be a handle or it could be something else. It could be just a bar.

MR. GERINGER: You've got to grip it.

THE COURT: That doesn't mean it's a handle.

MR. GERINGER: That's fine, your Honor. If it's clear enough, we'll proceed.

THE COURT: Can you say a cylindric bar?

MR. MILCETIC: That's fine with Biosig.

MR. GERINGER: That's fine, your Honor.

THE COURT: Set elongate member comprising a first half and a second half, so instead of elongate member called cylindrical bar and the rest will be the same.

[8] Next, a first live electrode and a face common electrode mounted on said first half in spaced relationship with each other.

Give me a moment.

(Pause)

THE COURT: The note I have from my law clerk is to ask if we're focusing only on disputed terms and only looking to plain meaning. And my purpose is to

put this set of claims in plain meaning that a juror can understand.

MR. GERINGER: Understood, your Honor.

THE COURT: That's our objective here.

MR. GERINGER: Agreed, your Honor. But from Nautilus' perspective by operation of law we believe that the claimed meaning we reached is informed by the full intrinsic record.

THE COURT: Yes, of course. Of course. But I am not making any what I might say differential instructions here. What I want to do is construe these sets of claims so that each of you could have your full array of arguments.

MR. GERINGER: Thank you, your Honor.

THE COURT: And that's the purpose I am trying to serve.

MR. GERINGER: Thank you, your Honor. I believe both parties also agree that we're looking for plain English here.

THE COURT: That's the whole point.

MR. GERINGER: Yes.

[9] MR. MILCETIC: This is Jenna Pellechia by the way.

MS. PELLECCHIA: Hello, your Honor.

I apologize for being late.

THE COURT: No problem. You were off on a mission.

MS. PELLECCHIA: Yes.

THE COURT: Mr. Milcetic, please elaborate on what we're talking about.

MR. MILCETIC: Okay. We're – you are talking about the first live electrode and the first common electrode?

THE COURT: Yes.

MR. MILCETIC: So you may or may not recall from the tutorial, so the recitation is the first live electrode and the first common electrode mounted on said first half in spaced relationship with each other.

THE COURT: All right. So I understand what a live electrode is. It's a conductor through which electricity can flow. You have that suggestion. What is the common electrode.

MR. MILCETIC: The common electrodes are in this patent. They're both essentially connected to a common potential. So they are the inner electrodes in the patent. So when you are holding the bar, they're the electrodes on the inside.

THE COURT: Well, does it make difference if it's inside or outside as long as it's the same.

MR. MILCETIC: Well, they're both connected to one [10] another and they're connected to ground.

THE COURT: So it wouldn't make any difference where they're existing, I guess.

MR. MILCETIC: That's true. We are not trying to incorporate anything. I am just trying to put this in context. So both electrodes are materials that conduct electricity and they're metal or other conductive material that are both on either side of the cylindrical handle or tube that we just described. And I think the parties agree that on meaning of the term "electrode". They agree that the common electrodes are connected to each other and to a common voltage such as ground. We both agree that the outs, again,

I'm just talking about the specific embodiment in the patent specification, the outside electrodes are the ones that are connected, that is the live electrodes are the ones connected to the differential amplifier.

So there's really no disagreement here –

THE COURT: Yeah, so why don't I accept the definition that both of you agree to, means the conductor through which electricity can flow. Each side of the handle has two electrodes, one live electrode and one common electrode. A live electrode is connected to an input of the difference amplifier. The common electrodes are connected to each other and to a common voltage such as ground.

Then I would take Biosig's definition of space [11] relationship as meaning a relationship according to a measured distance between two points, so that the first live electrode and the first common electrode have a certain distance between them and the second live electrode and the second common electrode have a different distance between them.

You say "another". What does "another" mean?

MR. MILCETIC: That was actually your phraseology. But I think both parties agree that the distance – in fact in the patent specification the distance is the same.

THE COURT: So having the same distance between them.

MR. MILCETIC: Or having a distance between them I don't think the patent claims refers to the size of the distance one way or another. They both have a difference between them, a relationship between them.

THE COURT: Having the same or a different distance between them.

MR. MILCETIC: That's fine with Biosig.

MR. GERINGER: Your Honor, for Nautilus –

THE COURT: Yes.

MR. GERINGER: – this is a very key term. I've put up on the screen our proposed –

THE COURT: I have it here. I don't need the screen.

MR. GERINGER: In our proposal we're quoting the file history. They distinguish the prior art in the file history by saying what that distance is. So, yes, a space relationship is [12] the distance between the electrodes but they made very clear – and we would be happy to walk through detail, your Honor – that they said the prior art had a particular space relationship of the electrodes with each other and that in the patent the electrodes had a different spaced relationship with each other.

So the primary disagreement here is that Biosig seeks a very general definition of spaced relationship with each other. Nautilus seeks the specific relationship articulated in the file history to distinguish prior art.

THE COURT: So let me focus. It's improper to say the same or a different distance because in the file wrapper it's clear there has to be a different distance.

MR. GERINGER: Yes. We would say having a distance between them that is greater than the width of each electrode.

MR. MILCETIC: Your Honor, on behalf of Biosig

THE COURT: One minute.

(Pause)

THE COURT: Go ahead.

MR. MILCETIC: There's nothing in this claim about the distance, the spaced relationship –

THE COURT: How should I interpret the file history?

MR. MILCETIC: Well, your Honor, what the Federal Circuit says is that we can narrow an otherwise plain meaning if there's a clear disavowing of scope.

[13] THE COURT: You don't think there has been?

MR. MILCETIC: No.

THE COURT: Point me to the language. I have the declaration from it.

MR. MILCETIC: Well, in particular I think the key part is if you take a look at page 7 of our – if you take a look the page 7 of our slides that we presented –

THE COURT: I'd rather go to the declaration.

MR. MILCETIC: Okay. We're dealing with the declaration. That is page 7 –

THE COURT: Rendering Lekhtman, L-E-K-H-T-M-A-N.

MR. MILCETIC: My understanding that is part of the declaration what's on page 7.

THE COURT: I don't want to go to a secondary source. Give me the primary source.

MR. GERINGER: We can give cites to the joint appendix. Do you have –

MR. MILCETIC: Sure.

MR. GERINGER: For example, your Honor, and I've put up on the screen our slides number 5 is an actual picture from that declaration, paragraph 79 and 80.

THE COURT: Look, I –

MR. GERINGER: JA 241.

THE COURT: I am an old style trial lawyer. I don't deal with secondary sources. Primary source of the [14] declaration, so paragraph 73 says during exercise detected the configuration the 200 patent will not eliminate the EMG which is – EMG?

MR. GERINGER: Muscles.

THE COURT: Electrimycardial – what's the "G" for?

MR. GERINGER: Probably from the "graph" that ends that word electromycardiograph.

THE COURT: Electromycardiograph or rather amplify it. That is why it will not work on exercise machines for anyone. Is that where you want me to go?

MR. GERINGER: That is one place, your Honor, but Joint Appendix 241.

THE COURT: Let me finish with this one.

MR. GERINGER: Yes. What paragraph are you reading, your Honor?

THE COURT: 73 and 74.

MR. GERINGER: Understood.

THE COURT: I can't use any of that. What's the next one?

MR. GERINGER: 79 and 80, your Honor, page 17, Joint Appendix 241. In particular 79 states it clearly.

THE COURT: What's the law about – from the file wrapper to contradict the claim?

MR. GERINGER: Your Honor, I think the Dupont case, the Hockerson/Halverson case and the Johnson case all say that [15] if you make a clear statement, it sticks. In each of –

THE COURT: Clear statement in a file wrapper –

MR. GERINGER: Yes.

THE COURT: – representation to the patent examiner?

MR. GERINGER: To distinguish prior art –

THE COURT: It trumps what you have in a claim.

MR. GERINGER: Yes, your Honor.

THE COURT: Sounds right, Mr. Milcetic.

MR. MILCETIC: I think it's correct that if you make –

THE COURT: So then take the language of 79 and apply it.

MR. MILCETIC: However, your Honor, we disagree.

THE COURT: Let me understand first Mr. Geringer's statement. And I think greater than the width is wrong. It should be greater or smaller than the width.

MR. MILCETIC: Biosig would be fine with that.

THE COURT: Mr. Geringer?

MR. GERINGER: I am looking at paragraph 69, your

Honor, of the declaration. Which would you –

THE COURT: Third line talks about narrower –

MR. GERINGER: Third line in the beginning in the middle of that paragraph where the fragment is in the 73 patents.

THE COURT: In the what?

[16] MR. GERINGER: The 753 Patent.

THE COURT: Sorry. I didn't hear it.

MR. GERINGER: So in paragraph 79 there is a long second sentence that says in the 200 Patent then follows through in and a comma, whereas in the 753 Patent the space between electrodes is wider than the width of each electrode, period. The distinction was that the prior art patent had the narrower. The patent in suit has the wider space in between.

THE COURT: Mr. Milcetic?

MR. MILCETIC: Well, number one, that's not a clear statement. And number 2 in the same declaration –

THE COURT: Which is the prior patent?

MR. GERINGER: 200 is the prior art.

MR. MILCETIC: It's the 200.

THE COURT: So you have to distinguish the current claimed invention from the prior art. So I think Mr. Geringer is correct. I adopt it.

MR. MILCETIC: Your Honor, may I make one comment?

THE COURT: Yes.

MR. MILCETIC: The question is whether or not there's clear disavowal here. And in this same declaration if you take a look at picture 26 which is JA 000331.

THE COURT: What page?

MR. MILCETIC: It's Joint Appendix 000331 which is a picture.

[17] THE COURT: You mean triple zero?

MR. GERINGER: 331.

MR. MILCETIC: 331, picture 26.

THE COURT: Picture 26.

MR. MILCETIC: This is also information that went before the Patent Office and it says that this picture shows the geometry of a star track and Schwinn brand by Nautilus which is the defendant in this case and both sensors are balanced by EMG sensors as per claim number one. You'll see there that the example that we're giving the Patent Office of something that's covered by the claim is where the spaces is smaller than the width of the [18] electrodes.

THE COURT: As a general matter in the printed words are more effective than the picture and I believe that Mr. Geringer states the teaching of the declaration that –

MR. MILCETIC: OK. Your Honor, the only other point that I would just want to get in the record is JA 246, paragraph 101 of this declaration. Paragraph 101 says, Nautilus and Unison used the teachings of the 753 Patent, that's this patent in suit in designing EMG balance detectors, so we've told the Patent Office that the Nautilus product is covered and showed them a picture of the Nautilus product where the space is less than the width of the electrodes. I find it surprising that the Patent Office would have allowed it on the idea that the space has to be wider than the width of the electrode.

THE COURT: You are reading paragraph 101 to me?

MR. MILCETIC: Yes. Paragraph 101, page 246 says Nautilus and Unison – Nautilus is the defendant in this case – used the teachings of the 753 Patent in designing EMG balance detectors for commercialized exercise equipment. So we've told the Patent Office that what Nautilus uses is covered. And in the picture that I just showed you we give an example of a Nautilus device that has the space that's smaller than the width of the electrodes. So why would the Patent Office have granted this patent on the notion that the space has to be greater than the width of electrodes?

MR. GERINGER: May I speak to that, your Honor?

THE COURT: Yes.

MR. GERINGER: This page does not distinguish prior art. Paragraph 79 and several others distinguish the prior art. The Patent Office examiner relied upon those distinctions. We can't unring the bell.

THE COURT: I don't know what the Patent Officer examiner relied on except looking at the written document.

MR. GERINGER: And, your Honor –

THE COURT: The written document in the claim is not specific as to greater or smaller or the same. The declaration in paragraph 79 is specific, that needs to be greater. And I think I have to go along with that. So I rule in favor of [19] Mr. Geringer.

MR. GERINGER: Thank you, your Honor.

THE COURT: So it's going to say space relationship means relationship according to the measured distance between two points. So that first live electrode and the first common electrode have a certain distance between them. And the second line electrode and the second common electrode have a different distance between them that is greater than the width of each electrode.

MR. GERINGER: Your Honor, if I may clarify, just by only so that we know. And the pictures in our patent are also illustrated. I would suggest that we say, space relationship means a relationship according to a measured distance between two points so that the first live electrode and the first common electrode have a distance between them that is greater than the width of each electrode, and the second live electrode and the second common electrode have a distance between them that is greater than the width of each electrode. So we're merely changing – we're merely adding the phrase "that is greater than the width of each electrode" twice. Once for this pair, the left pair, once for the right pair.

THE COURT: I accept that.

MR. MILCETIC: Your Honor, I will make one last comment just for the record and I respect your ruling. The only other point that I would make is that this claim doesn't [20] even reference the width of the electrode. In other words, there may be a statement among many other statements in a declaration that distinguish the prior art from these patent claims but it doesn't even reference the specific language that you are construing. The specific language you're construing talks about a space between two pieces of metal on the bar. And what you're doing is incorporating from the declaration a statement about the width, the size of the electrodes which there isn't even a hook in the claim language for that. So our position is again –

THE COURT: So the space between electrodes is wider than the width of each electrode. So I guess under the teaching of Mr. Geringer I should take exactly that language.

MR. GERINGER: That is Nautilus' position. Not every statement that you make in the declaration is something that gets incorporated into the definition.

THE COURT: It's a risk.

MR. MILCETIC: It's risk. I agree, your Honor.

And –

THE COURT: No question. Mr. Lekhtman said it. He meant to say it, so that the examiner could rely on it. And I have to see what the examiner did.

One minute.

(Pause)

THE COURT: We should incorporate Paragraph 69.

[21] MR. MILCETIC: Certainly, that would be fine with Biosig, your Honor.

THE COURT: The problem with this declaration is that it's inherently contradictory. A spaced relationship connotes a precise spatial measurement, otherwise it could be rendered and placed anywhere. Paragraph 79 teaches that that space relationship is wider, is greater than the electrode is wide. Paragraph 69 says it could be adapted for particular uses and, I guess, with particular people. And so paragraph 69 and paragraph 79 and the claim are inherently contradictory. Now, how am I to deal with that on a definition?

MR. MILCETIC: From Biosig's perspective, your Honor, I think I'd just go back to the statements that we made earlier about the Federal Circuit's case law and that is that the presumption is that you start with what's in the claim and then can you change what's in the claim if there's a clearness about it, if it's clear, if the evidence in front of you is unambiguous.

THE COURT: I think it's hard to read but it's clear once you think through it it's clear. 69 says the size, shape, material and spacing of the activity electrodes cannot be standardized for all exercise analysts. Analyses must be made on a machine's specific basis to find the best relationship between the electrocardiograph [22] and the electromyogram ratio for each machine. That's different from spaced relationship and it's different from paragraph 79.

MR. MILCETIC: Which is why Biosig's position is that you can't incorporate that.

THE COURT: What is the purpose of the declaration? This is gibberish.

MR. GERINGER: Your Honor, may –

THE COURT: And you are falling right into a trap, Mr. Milcetic, of an invalidity for ambiguity. You don't want to do that. I don't want to necessarily define the patent in such a way as to cause you to lose your patent.

MR. MILCETIC: I also don't mean to define it that way, obviously, your Honor. But if the declaration is ambiguous in certain respects that doesn't mean the patent is –

THE COURT: A lot of depends on the claim, depends on the materiality of the point. And the spaced relationship is important in this measurement as I think it is, then you have a problem. What you are telling me is that this patent can make it easy to measure the difference between the noise set off by the wave lengths of a muscular structure and the nerve system when exercising against the heartbeat.

MR. MILCETIC: Yes.

THE COURT: And that is the novelty of your patent. [23] And one of the ways of finding differentials is to define exactly how you place the different places to measure. Paragraph 69 says it's got to be done by trial and error. Paragraph 79 and the claim says it's a defined special relationship. Trial and error suggest you move it around till the find the optimum.

MR. MILCETIC: That's correct but I think that paragraph 79 was just pointing out one of many differences between the prior art and the accused product and it's something that is done to give the examiner context along with the other statements that we've made to the patent office including the picture of Nautilus' product which we say was covered by the patent.

THE COURT: So what you do is try tell the patent examiner to agree in advance that Nautilus is committing an infringement.

MR. MILCETIC: We're not asking you to try you now.

THE COURT: That's the nature of what you are asking and I am not going to do that either. My goal is not to define this patent in a way that precludes you from arguing the validity and in a way that precludes Mr. Geringer from denying infringement. And you want me to do both and I am not going to do it.

MR. MILCETIC: To be clear, your Honor, Biosig doesn't want you to do anything other than –

[24] THE COURT: Define the patent.

MR. MILCETIC: Define the patent. And our view is that what's in the claim refers to a space between two electrodes. Irrespective of what's in the declaration, any ambiguities or contradictions that might be in the declaration, that space, if you look to a dictionary, if you were doing anything to define that space, what you would do is you might say, all right, well, that space is three inches or five inches –

THE COURT: I'm going to conclude this point and we're going to rewrite this so that we incorporate the sense of 69 and 79 in the sentence. Says, in my present thought is that we're going to define the first phrase. The first live electrode and the first common electrode mounted on said first half in spaced relationship with each other. And we are going on to say, the spaced relationship arises from trial and error placements of the two electrodes on the cylindrical bar. Once placed they're in a space relationship. That spaced relationship must be greater than the width of each electrode. What I've done will confuse the ju-

ry and it may set up Mr. Milcetic for a ruling of invalidity. Fair warning. If you got a better thought, produce it. But that's where my mind is right now.

MR. MILCETIC: Produce it, meaning after this hearing or –

[25] THE COURT: After this hearing.

MR. MILCETIC: All right, your Honor.

THE COURT: Give it to Mr. Geringer. Mr. Geringer can draft his criticism or counter suggestion and I'll take it in a joint submission and any others that come about but there will not be successive letter writings. One chance to do that.

MR. MILCETIC: That's fine, your Honor.

THE COURT: Then you have essentially what I am going to say.

(Pause)

MR. MILCETIC: Your Honor?

THE COURT: Yes.

MR. MILCETIC: May I just make one other point?

THE COURT: Yes.

MR. MILCETIC: In terms of this paragraph 79 that your Honor had expressed that you are potentially interested in reading, incorporating that statement into claims because it's clear, just read the declaration. So the declaration around that says claim one of the 753 Patent differentiates from the 200 Patent. So we are trying to distinguish from the prior art as your Honor correctly noted. And then there's the paragraph 79 that you pointed to which you are interested in incorporating some of that lan-

guage. But then the prior paragraph 78 right before it, right before it says, in the illustrated embodiment of 753 [26] Patent the detector electrodes are relatively narrow and spaced apart and are very likely to be completely covered by the hand throughout an exercise routine, regardless of shifting hand position in the handle. And then we say in paragraph 79, although the handle of the 200 Patent had two electrode sectors for each hand, the configuration differs for that of the 753 Patent. In the 200 Patent the space between is narrower. But the prior paragraph says we're talking about the patent specifications, not the claims. Then you look at the next paragraph 80.

THE COURT: You are talking about the patent?

MR. MILCETIC: Specification, the embodiment.

THE COURT: I have a read the claims in the context of the specification.

MR. MILCETIC: Well, it's true. But the question is how much of this extraneous document are we going to read into the claims?

THE COURT: But it's not an extraneous document. That's how you got the patent. You had a lawsuit here.

MR. MILCETIC: For a second time.

THE COURT: You withdrew the lawsuit, said we have – with the patent examiner and you had those proceedings. So what do I make of this declaration. Should I forget about it?

MR. MILCETIC: No. There's a lot in this declaration and then if you just look two paragraphs down from that –

[27] THE COURT: That's what lawyers always do with documents. They can't take the whole document – they take it bit by bit and the other side and they show that it's ripped out of context. And that's what the argument has been. But this is a plain statement. I have to give it some effect to understand it cause as I say, I find that it's – that the relationship between the claims and the declaration and the prior art are confusing and it may affect the validity of the patent.

MR. MILCETIC: Why don't we give you the submission you asked for.

THE COURT: Yes.

MR. GERINGER: To be clear, your Honor, that submission you've asked for is that if Biosig can think of a way to synthesize paragraph 69 consistent with paragraph 79 –

THE COURT: I'll give it a wider scope if they can incorporate the teachings of the declaration and the claims in a way that's different, substantively different from the way I suggested, I'd like to see if and you'll have your chance to comment on it.

MR. GERINGER: Thank you, your Honor.

May I make that relevant, what I believe is relevant point on that, your Honor?

THE COURT: Yes.

MR. GERINGER: It's not just paragraph 79. Take [28] paragraph 42, for example, of the declaration. It said, we could distinguish it on site, paragraph 42 just this is JA 233, trial and error within certain bounds but what we submit will need to be consistent with this concept as well, your Honor, which is Mr. Lekhtman said, and his lawyers argue,

that you could distinguish the spacing on site. It is not that complicated for them.

THE COURT: Okay. Thanks.

MR. GERINGER: Okay. My next term, your Honor, if I may make a ruling is another agreed term that the two live electrodes are electrically connected – of a diff amp. Your Honor, the next few terms are agreed. Would you like to walk through for them or shall we?

THE COURT: No. I think I had enough those.

MR. GERINGER: The next disputed term, your Honor, is a term about phase. If I may make a suggestion, phase is complex and not as material as substantially equal and substantially zero. Which term would your Honor like to turn to next?

THE COURT: Well, in sequence what is the next; thing.

MR. GERINGER: The next is the whereby clause, your Honor, on page 4 of the document.

THE COURT: Whereby, the first electromyogram signal will be detected between said first live electrode and said first common electrode. And a second electromyogram signal of [29] substantially equal magnitude and phase to said first electromyogram signal will be detected between said second live electrode and second common electrode. So you are measuring the muscles and nerve system by each electrode.

MR. GERINGER: Correct, your Honor. This is a result that flows from the structure. If you have your electrodes balanced they will feed substantially equal muscle signals into the diff amp. And as we know equal things get cancelled in the diff amp. The elec-

trocardiograph, the heart is different from each side. Differences get amplified in the diff amp. So this whereby clause just feeds substantially equal muscles signals in on each side so that you can get substantially –

THE COURT: I don't think it needs to be interpreted, Mr. Geringer.

MR. GERINGER: Understood, your Honor, I agree. We could let this language speak for itself.

THE COURT: Mr. Milcetic.

MR. MILCETIC: Yes, it's fine, your Honor.

THE COURT: Okay.

MR. MILCETIC: I want to point out the term phase –

THE COURT: Well, it's an electronic term.

MR. MILCETIC: Okay. That's fine. We're willing to leave it alone. We can explain it. But your Honor's ruling on it is fine with us.

[30] THE COURT: Isn't phase the completion of a cycle on a graph?

MR. MILCETIC: Yeah. I mean that's a good way of getting at it. From our perspective in the simple terms, phase refers to the timing of signals. So there is the amplitude, the magnitude. That's the size of the wave and then there is the phase which is how they correspond to the time which is on the "S" axis. So if you shift something out of phase then you essentially could get opposite signals. So it refers to the – yeah, to the –

THE COURT: You can flatten a wave or elongate the wave.

MR. MILCETIC: It's, actually, more moving it in time basically. We're thinking about moving it ahead in time. So if I have a – yeah. I know this a secondary source but if you – we used the dictionary for our definition. Turn to page 10 of our slide.

MR. BONE: Do you want to us put it on the screen?

THE COURT: The jury doesn't have to understand this.

MR. MILCETIC: It doesn't, your Honor.

MR. GERINGER: Please.

MR. MILCETIC: I was just going to say that the –

THE COURT: I would say that you can think of an electrical signal as a wave. As the wave moves forward it rises and falls and then comes back to a mean and repeats [31] itself and repeats itself and repeats itself. Each repetition is a phase. That is how I would interpret the word.

MR. MILCETIC: I think that would be fine with us. I mean I think the size of the wave that you think about is magnitude.

THE COURT: Right.

MR. MILCETIC: And the –

THE COURT: All right. So we can incorporate that definition in magnitude and phase.

The next is so that when said first electromyogram signal is applied to said first – signal is applied to said second term, the first and second electromyogram signals will be subtracted from each other to

produce a substantially zero electromyogram at the output said difference amplifier.

MR. GERINGER: Your Honor, if we're not going to construe the phrase before we're really in some ways these just run together.

THE COURT: I agree. Mr. Milcetic.

MR. MILCETIC: Fine with us.

THE COURT: Okay.

MR. GERINGER: Your Honor, just on the phase point, if I could just ask for clarification what we've decided, I have put up on the monitor Figure 3 of the patent which shows some of this cyclicalness that I think your Honor is referring to, right.

[32] THE COURT: Right.

MR. GERINGER: What will we use for phase, your Honor?

THE COURT: In this diagram put before me you can put an "A" and a "B" where the beginning of the phase is and end of the phase is. So the beginning would be where the first rise in the signal is shown and the end of the phase is the very beginning of the second rise in the signal.

MR. GERINGER: Agreed, your Honor, like waves of the seashore. Excuse the metaphor if it doesn't help. So actually it would be okay with Nautilus if one were to just annotate that picture, your Honor.

THE COURT: All right. We'll do that. What's next?

MR. GERINGER: Means for measure – it's means plus function. Did I skip one?

THE COURT: I am at page 6.

MR. GERINGER: Right. Your Honor, so we didn't construe this "so that" clause. The next clause also is a and whereby much like –

THE COURT: Well, we have to define electromyogram.

MR. GERINGER: Correct. It's a heart signal, your Honor. The heart's electrical signal. The parties agree on that definition.

THE COURT: Okay.

MR. GERINGER: Would your Honor like me to move to the next?

[33] THE COURT: Yes.

MR. GERINGER: It's also a "so that". So again it follows as a result, the parties haven't offered an agreement here to try to put it in plainer English.

THE COURT: I think we're finished, actually.

MR. GERINGER: Just the "means plus" function, your Honor. It's a complicated area in patent law.

THE COURT: Where is it?

MR. GERINGER: There are two means plus function elements. They come up exactly next and they start off –

THE COURT: What page?

MR. GERINGER: Page 7 of docket 19-1, see "Means for Measuring Time Intervals Between Heart Pulses, Etc". and then on the next page we see "Means For Calculating The Heart Rate". So these are two means plus function clauses. If I may say a

word, your Honor, in general about means plus function clauses?

THE COURT: Yes.

MR. GERINGER: Section 112 paragraph 6 of the Patent Act is special. It says you can use means plus function language. If you do the Court will look to the specification and find the structure for that function. The parties here agree on the functions that are being recited here. They do have some disagreements on the structure that performs those functions. You need to go to the spec and decide what structure forms is linked to those functions.

[34] THE COURT: I don't know that's necessary in the definition. It's an argument under a different heading. And I don't know that you have to define anything here any more.

I think I'm finished.

MR. GERINGER: Markman is an intertive process, your Honor. If we're done for the day, we're done.

THE COURT: I think we're done for the day.

MR. MILCETIC: Your Honor, if we are done, we're done. I do agree with Mr. Geringer.

THE COURT: That's profound.

MR. MILCETIC: Those means plus function, we are supposed to look at the specification and determine what a corresponding structure is but if we're done, we're done.

THE COURT: What do you want me to do?

MR. MILCETIC: We could be done.

MR. GERINGER: Frankly, your Honor –

THE COURT: All right. We're done so what's next?

MR. GERINGER: You can declare what you want us to do.

THE COURT: You are going to submit – by the end of next week I'll have a ruling out. Where do we go? What's next?

MR. GERINGER: Your Honor, you said that you'll have a ruling out by the end of next week?

THE COURT: I hope.

MR. GERINGER: So you are not waiting on a joint [35] letter from our argument?

THE COURT: I'll look at your letter.

MR. GERINGER: Okay. We will get the letter on by what date, your Honor, a week from today?

THE COURT: A week from today. That means Mr. Milcetic has to give it to you by Monday and you both have to submit by Wednesday.

MR. GERINGER: Two pages or less, your Honor, page each?

THE COURT: Take what time you need but I don't see how it could be much longer than that.

MR. MILCETIC: Then was next, your Honor, is, frankly, your Honor –

THE COURT: Friday or Monday.

MR. MILCETIC: Thank you, your Honor.

THE COURT: What's next?

MR. GERINGER: Your Honor, once we have your ruling, certainly, the parties will confer. It may be

that Biosig needs to change allegations. We'll have to look at your ruling but besides as we always do –

THE COURT: I don't believe there's going to be changes in allegations the third time around.

MR. GERINGER: I don't make that decision.

THE COURT: I'm not going to assume Mr. Milcetic is going to change his mine.

[36] MR. GERINGER: Okay, your Honor. Then the next step will be if that the parties as you've said will see what arguments they can make based on your ruling and make –

THE COURT: The basic question is you are going to seek a motion for judgment on the pleadings where you are going to go into discovery.

MR. GERINGER: I'll seek a motion on judgment on pleadings, your Honor, because none of the accused devices have the – because the accused devices electrode spacing is like the prior art that is distinguished.

THE COURT: You don't have to.

Mr. Milcetic, what would you like to do next?

MR. MILCETIC: Well, your Honor, we would –

THE COURT: I think Mr. Geringer wants to do a motion, might as well meet him and try to defeat him.

MR. MILCETIC: Oh, absolutely. Obviously, we would oppose.

THE COURT: So when you write to me you'll give me a briefing schedule.

MR. MILCETIC: Yeah, that's fine.

MR. GERINGER: Letter by Wednesday with briefs, proposed briefing schedule.

THE COURT: Now, is there any need to preserve any discovery?

MR. GERINGER: Your Honor, we are preserving [37] documents.

THE COURT: How about witnesses? Are you making sure no one gets sick or dies?

MR. GERINGER: Unfortunately, your Honor, since this case began Nautilus has shrunk dramatically. We don't plan any further shrinkage.

THE COURT: Why are you looking at general counsel? He is not the first to know.

MR. GERINGER: So we don't anticipate any material changes in the future is always unknown.

THE COURT: That's what we do.

MR. MILCETIC: Your Honor, the only –

THE COURT: I think if there's a cause of action here we're going to know that by the end of December or earlier. Then we'll move ahead.

MR. MILCETIC: So, your Honor, does that mean no discovery until that time?

THE COURT: I think so. Don't you think so? Why waste money if there's no claim? If there's a claim then we'll go ahead.

MR. MILCETIC: We're find with that. I mean that makes – that's a fine from our perspective to do it that way.

THE COURT: So the briefing should be completed within two months.

MR. GERINGER: We will be sure to propose a schedule [38] that conforms to that, your Honor.

THE COURT: That means I'm going to get the motion by the end of October.

MR. GERINGER: Completed within two months. Perhaps, start in September and finish by mid-October you have the briefing complete by mid-October?

THE COURT: Yes. By the end of October. All right, then that means we'll be able to meet in November some time and plan the case to finish up by June.

All right. Thanks very much.

(Adjourned)

DECLARATION OF GEORGE YANULIS FOR BIOSIG INSTRUMENTS, INC.

(Plaintiff) v. NAUTILUS, INC. (Defendant)

Filed in: UNITED STATES DISTRICT COURT SOUTHERN DISTRICT OF NEW YORK

Case 1:10-cv-07722-AKH
Document 32 Filed 09/29/11

Plaintiff: BIOSIG INSTRUMENTS, INC.,

Defendant - NAUTILUS, INC.,

----------x

Case 1:10-cv-07722-AKH

BIOSIG INSTRUMENTS, INC. v. NAUTILUS, INC.

MY PROFESSIONAL BIOGRAPHY

I hold a bachelor of arts degree in pre-medicine from Syracuse University, a Master of Engineering in Biomedical Engineering with an emphasis in electrical engineering and biomedical signal transducer theory and design, a Master of Science in Bioengineering from the University of Pittsburgh with an emphasis in artificial organ devices, and a Doctor of Engineering in biomedical engineering from Cleveland State University.

I presently consult in the field of medical devices for Medical Device Consultant at the Laughlin Engineering Firm, LLC. My job includes consulting on ethical and quality engineering services, providing expertise in both clinical and preclinical medical device trials, preparing and reviewing FDA product

submissions, and product development. I also am an adjunct professor in engineering science at the College of Staten Island. I teach courses and laboratory courses for the engineering and physics departments.

My experience includes working with medical devices, heart rate monitors, and analyzing heart rates. For example, I have conducted cardiac pacing research studies. I have also conducted cardiovascular signal monitoring and analysis. I have further participated in the surgical implant of cardiac pacing devices including over seventy-five surgical implant procedures at the Cleveland Clinic's Atrial Fibrillation Innovation Center. Based on my education and experience I believe that I am an expert in the field of the invention claimed in U.S. Patent No. 5,337,753 as that patent claims certain heart rate monitors. My curriculum vitae is attached as Exhibit A and the '753 patent is attached as Exhibit B.

I have been retained by Biosig Instruments, Inc. as an expert witness in to consult on the technical issues raised in its patent infringement case (US Patent 5,337,753) against Nautilus, Inc. I have been asked to provide preliminary opinions regarding certain infringement issues. I understand that there has not been any discovery in the refiled case and that there was limited discovery in the previous case. I also understand that there monitoring equipment to Nautilus in either the previous or the refiled case. I also understand that that there has not yet been discovery of Nautilus' heart rate monitor venders' documents. I further understand that the documents produced by Nautilus do not include information on all of the relevant products and the production of technical documents was limited. I understand that I will be able to prepare final opinions once discovery

of the factual issues is complete, so I provide my opinions based on the limited information that is currently available to me, It would be helpful to my analysis to have testimony from Nautilus personnel, former employees, and manufacturers of the Nautilus equipment. It would be helpful to my analysis to have documents from Nautilus and manufacturers of components of the heart rate monitors used in the Nautilus equipment. These documents and testimony are relevant to my analysis and will provide insight into the operation of the heart rate monitors used in the exercise equipment sold by Nautilus. These documents and testimony, I understand, will provide a greater level of detail regarding how the heart rate monitors in the Nautilus exercise equipment measure and calculate heart rates. A greater level of detail regarding the structure with which the Nautilus equipment performs the functions of measuring and calculating heart rates will allow me to perform a more detailed infringement analysis. For example, flow charts, source code, and product specifications will describe the electrical components and signal processing in the heart rate monitors, which is something that cannot readily be determined from the devices themselves.

I have also been asked to provide certain opinions regarding the validity of Biosig's '753 patent and in particular opinions regarding indefiniteness and validity regarding certain references that Nautilus raised.

SUMMARY OF MY OPINIONS

Based on my experience and the reasons discussed below, I believe the '753 Patent is valid. Further, from the limited information presently available to me, it is my opinion that the Nautilus products

have structure for performing the function of the claimed means for measuring and means for calculating as those functions were defined by the Court. It is also my opinion that it is more likely than not the Nautilus products have the same or equivalent structure as that claimed in the Biosig patent for performing those functions.

To arrive at my opinions, I carefully reviewed the Biosig Patent, its specification and file history, discovery produced by Nautilus in a previous litigation with Biosig and publicly available information. I also reviewed the Claim Construction Order issued by the Court, and compared the construed elements to the accused Nautilus devices. It is also my opinion that the Biosig patent claims are not indefinite as it is my opinion that the claim scope is understandable by a person of ordinary skill in the art.

It is also my opinion that the Biosig patent claims are not invalid in view of the Fujisaki patent or the Fujisaki patent in light of either the E-Factor book or the Charnitski patent.

* * *

PATENT VALIDITY ISSUES

Based on my experience and a detailed review of the prosecution history for the '753 Patent, as well as the prior art asserted by Nautilus, I believe the '753 Patent is valid.

I was asked whether the patent claims are definite or whether they were indefinite. I understand that the test for indefiniteness is whether a skilled artisan could not discern the boundaries of the claim based on the claim language, the specification, and the prosecution history as well as his knowledge in the relevant art area. I further understand that

claims not amenable to construction or insolubly ambiguous are indefinite.

I was asked whether the '753 patent claims are "indefinite" because they do not distinguish the Fujisaki patent or whether the claim scope is not susceptible to meaning. The Fujisaki patent was the subject of two reexamination proceedings instituted by Nautilus in which the PTO confirmed the patentability of the claims without amendment. The reasons for allowance in the reexamination explain why the claims are distinguishable as Fujisaki does not disclose the "whereby clause" that explains how EMG signals are removed for better determination of heart rate. I agree with the Patent Office that Fujisaki does not disclose those limitations. I also find that Fujisaki does not disclose the means for calculating limitation as there is no algorithm for performing validity checks on the data as claimed in the corresponding structure in the '753 patent.

I find that a person of ordinary skill in the art could readily discern the claim scope of the '753 patent claims, including the spaced relationship construction adopted by the Court. A person of ordinary skill in the art has a relevant technical degree such as a biomedical engineering degree and a few years experience in the relevant field of medical devices involving heart rate measurements. The person of ordinary skill could easily discern the claim scope because the EMG signals have to be substantially removed, and a person of ordinary skill in the art can test for that just as Dr. Lehktman did during the reexamination proceedings. His testing showed that Fujisaki did not substantially remove EMG signals. A person of ordinary skill in the art knows how to test to determine whether EMG signals are substan-

tially removed. The '753 patent does not use any terminology that one of ordinary skill in the art would not readily understand.

ANTICIPATION ISSUES

I understand that anticipation is determined by comparing the construed patent claims to a prior art reference. In order for there to be anticipation, it is my understanding that the reference must disclose each claim limitation arranged as claimed.

It is my opinion that the patent claims are not anticipated by Fujisaki et al. I agree with the patent office that the claims are patentable over Fujisaki et al. As I described above, the Fujisaki patent does not disclose at least the claimed EMG whereby clause or the means for calculating. Fujisaki discloses using each time interval measured and does not disclose validity checks on the data, much less those claimed in the '753 patent algorithms.

During the reexamination procedures, the Patent Office rejected certain claims as anticipated by U.S. Patent No. 4,444,200 (Fujisaki et al.) (and later as obvious over Fujisaki et al. in view of the De Vel reference both of which were submitted by Nautilus). Biosig distinguished Fujisaki et al as not teaching the "critical aspect of claim 1" namely that electromyogram signals of substantially equal magnitude and phase are detected between the electrode pairs so that the differential amplifier will subtract them to produce a substantially zero EMG signal at the output of the difference amplifier. Biosig explained that the detection and removal of the electromyogram signals are a function of the electrode size, shape, spacing, material, and circuitry. Fujisaki et al. was silent regarding removing EMG signals. Fur-

ther, Fujisaki et al. did not disclose the detection and removal of EMG signals as claimed because Fujisaki et al. disclosed large rod- shaped electrodes in combination with small spacing and circuitry that did not produce the desired result. I agree with this patent office which agreed with Biosig's positions.

OBVIOUSNESS ISSUES

I understand that test for obviousness is whether the invention was obvious to a person of ordinary skill in the art and includes a consideration of the level of skill in the art, the scope and content of the prior art, the differences between the claimed invention and the prior art, and what I understand is referred to as secondary factors of nonobviousness such as commercial success.

Nautilus alleges obviousness over Fujisaki et al patent (JA977) and the '244 Charnitski patent (JA583). Charnitski is a 3 electrode system, not a 4 electrode system, so there is no discussion of how to combine and modify it with Fujisaki, which discloses a 4 electrode system, to achieve the invention. The following figure contrasts the electrode system in both patents.

FUJISAKI PATENT

FIG. 1

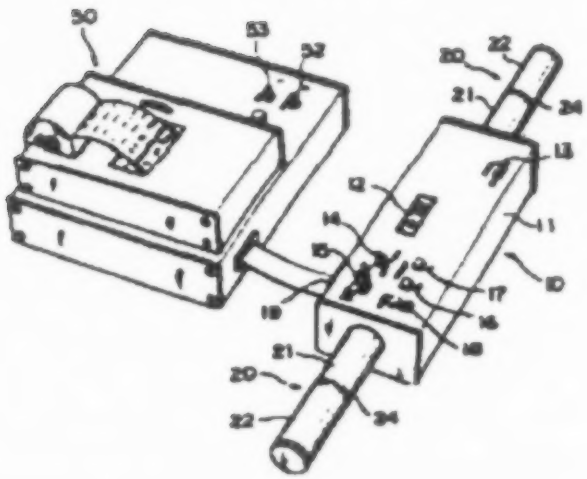

CHARNITSKI PATENT

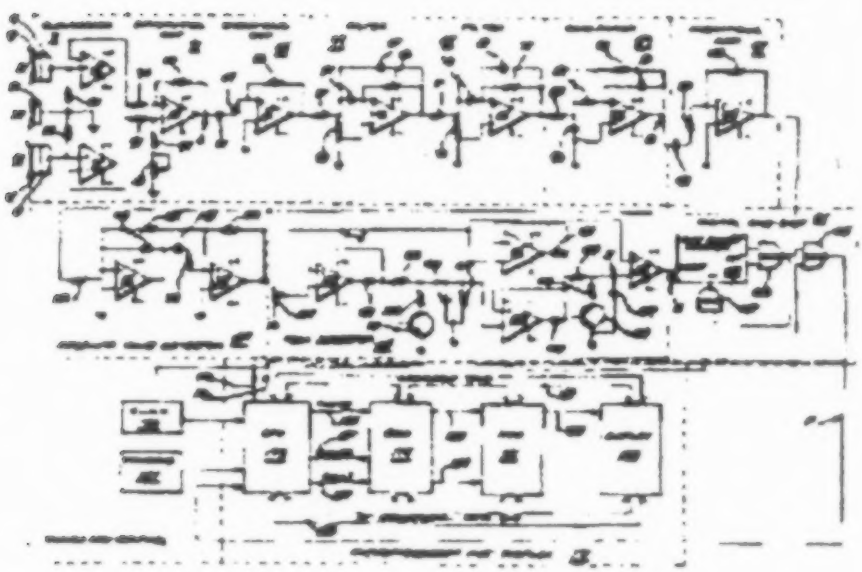

Additionally, in the Charnitski patent there is disclosed a heart rate indicator having electrodes for coupling to the electrical impulses corresponding to

each beat of the heart of a living subject, which electrodes are connected to an electronic circuit for producing a burst of alternating electronic signal in response to each electrical impulse produced at each heart beat. The electronic circuit in turn is connected to a detector circuit for detecting the peak amplitude of each burst of alternating signal and to produce an electrical pulse related in time thereto, the detector circuit in turn being connected to a microcomputer which measures the time between pulses and selectively converts the measured times into a number representing heart beat rate, the microcomputer being in turn connected to a display for displaying the number representing heart beat rate. But this is not obvious to one skilled in the art that this heart rate indicator can be combined with Fujisaki to form the claimed invention. Since it is a three electrode configuration it differs technically, as it lacks the claimed electrode arrangement. There is no explanation in either Fujisaki or Charnitski as to how to combine the two systems, and since they are different electrode configurations, one of ordinary skill would not have combined them. Accordingly, it is my opinion that the claims are not obvious in view of these references.

It is also my opinion that the '753 patent claims are patentable over Fujisaki and the E-Factor book (JA569). The Patent Office considered both references during the reexamination proceedings and confirmed the patentability of the patent claims over these references. I agree with the patent office that the claims are valid over these references. As described above, Fujisaki does not teach at least the EMG whereby clause and the claimed means for calculating. Combining the E-Factor Book with Fujisaki does not render the invention obvious because the E-

Factor book does not disclose the removal of EMG signals as claimed. For example, similar to Fujisaki, the E-Factor book does not disclose the validity algorithm that is claimed. Also, the E-Factor book does not disclose the circuitry for processing heart rates and does not disclose how the four electrodes pictured are connected. Thus, it does not disclose the configuration of electrodes as claimed. Also, the E Facto book does not disclose the differential amplifier connected to the electrodes as claimed. There is no teaching as to how to combine the two references to form the claimed invention, and one of ordinary skill in the art would not find it obvious in light of these references.

I declare under penalty of perjury that the foregoing is true to the best of my knowledge and belief.

Dated: 12/15/2011 s/
George Yanulis

Biosig Instruments, Inc. v. Nautilus, Inc., 10-CV-7722 (AKH)

Summary Judgment Hearing
February 22, 2012
(U.S. Patent 5,337,753 C1)

Nautilus Presentation

INDEFINITENESS

How can a designer tell what's safe?

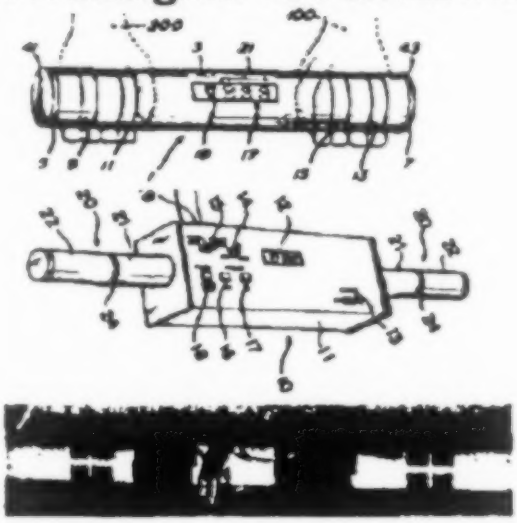

THE INTRINSIC EVIDENCE IS INSOLUBLE.

A POSA cannot use the claim construction to exclude the physical (non-software) structure of Fujisaki '200 from the scope of claim 1.

The reexamination file history doe not clarify anything. But unless a POSA can safely ignore the file history – something neither party argues – Fujisaki's physical structure must be distinguished somehow. How?

(N.B., Biosig has never argued that its statements in the patent office record are "mistakes.")

'753

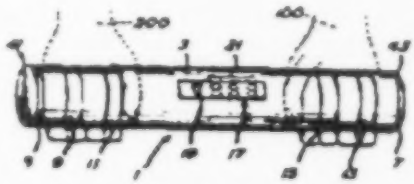

IN?

Fujisaki

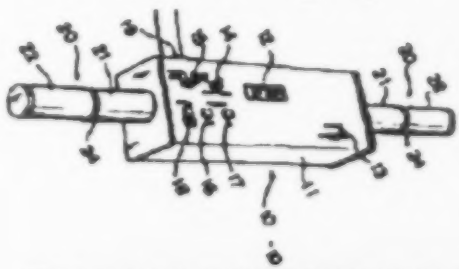

IN?
OUT?

Galiana

IN?
OUT?

INDEFINITENESS

- How is a POSA to distinguish the physical (non-software) attributes of Fujisaki?

Both have 4 contact electrodes:

2 connected to ground

2 connected to a diff amp

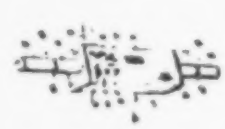

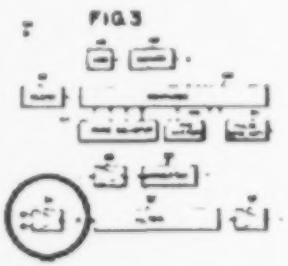

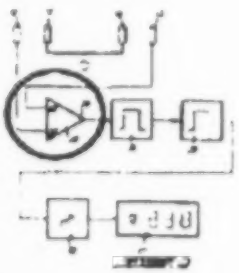

Biosig's "Test"

- **WHERE** is this test found?
  - Only in the Reexamination file history
  - It's not in the '753 patent or the original file history
  - It's not in any publication cited by Biosig
- **WHAT** is the test?
  - it depends on *user behavior*. The user holds the bar in "relaxed," "non-relaxed," and "grasping" grips
  - the ECG/EMG ratio at the output of the diff amp must be 2 or greater for all grips
- **WHEN** was this test created?
  - June 2009, 17 years after the patent application was filed
- **WHY** this test instead of Dr. Galiana's?
  - When Biosig wanted to demonstrate the claim, it cited Dr. Galiana's structure:

How Biosig Implemented the '753 Circuit in 2008, Before Reexamination

Figure 7: Photographs of the 'breadboard' implementation of the '753 patent, including a simple dowel arrangement for the 4 copper electrodes held by the two hands. The circuit was limited to that part of Figure 2 in the patent representing electrode connections and the instrumentation (difference) amplifier.

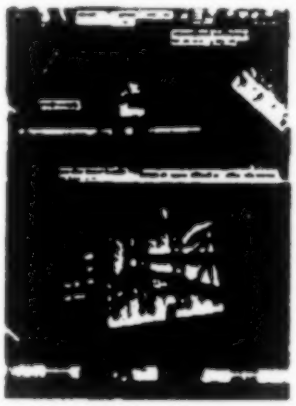

Report of Dr. Henrietta Galiana, at JA 1049

7

Dr. Galiana – How *Easy* It Was in 2008 ...

52 The above-described apparatus (Figure 7) was built by my lab assistant, at my direction. Specifically, I handed him Figures 1 and 2 of the '753 patent, and asked him to build the apparatus. Using a 7/8 inch broomstick-like wooden dowel, wire, copper foil, glue, and electrical tape, all found in our lab, he constructed the handle with metal contact electrodes, as illustrated above. He constructed the circuit using off-the-shelf components plugged into a conventional "bread board", all of which are common items found in our lab and commonly available on the market. He then connected the circuit to an oscilloscope to enable me to monitor measured signals. He completed all this work in about two hours. I tested the apparatus immediately thereafter, and without any adjustment or revision, the apparatus worked just as described in the '753 patent.

JA 1049-50

53 While the circuit is unique in the manner I have just used reference to it below working on this case, the construction of the circuit itself is quite simple. The pertinent portion of the circuit recited in claim 1 of the '753 patent is straightforward, requiring a simple difference amplifier wired to four contacts on a handle. Based on my experience working with students and persons of ordinary skill in the art over the last 25 years, I have no doubt that using the '753 patent as a guide, [redacted] by a person of ordinary skill in the art in 1992, and without any [redacted]

8

Biosig's "Test"

- HOW is the test applied? The POSA must guess:
  - Who is an acceptable subject?
  - Does the scale of the device matter?
  - What does it mean to hold a device in a "relaxed" way versus "non-relaxed" and "grasping"?
- Must the POSA know the intended use of the device? What if it's used by someone walking? Or in a doctor's office?

> Biosig Admission at JA 255, ¶ 138: "the ECG/EMG ratio for the model of the [Fujisaki '200] device while held with relaxed hands can provide acceptable heart rate measurements"

9

INDEFINITENESS UNDER *IPXL*

(Claim 1 recites user action in an apparatus claim)

IPXL invalidated Claim 25 of U.S. Patent 6,149,055 to Gallo, which recited, in a system that included a keyboard as input means,

> **"wherein ... the user uses the input means"**
>
> (430 F.3d at 1384)

Claim 1 of the '753 patent-in-suit recites a heart rate monitor

> **"wherein, said elongate member is held by said user"**
>
> (i.e., "the cylindrical bar is held by the user" with her left and right hands)
> (Dkt. 32 at 2)

Both claims recite a system "wherein"
"the user" must act in order to provide input

10

* * *

EX PARTE REEXAMINATION COMMUNICATION TRANSMITTAL FORM

REEXAMINATION CONTROL NO. *90/012,104.*

PATENT NO. *5,337,753*.

ART UNIT *3992*.

* * *

DECISION DENYING _EX PARTE_ REEXAMINATION

1. No substantial new question of patentability affecting claim 1 of United States Patent Number 5,337,753 (Lekhtman) is raised by the present Request for *ex parte* reexamination for the reasons set forth below.

References Cited in the Request

2. The following references have been cited in the Request filed 01/25/2012.

- **Fujisaki '200** – (U.S. Patent No. 4,444,200)
- **Bioelectronic Measurements** – (Dean A. DeMarre and David Michaels, "Bioelectronic Measurements," Prentice-Hall, Inc., 1983 (ISBN 0-13-076398-5), pages 1-35 and 41-50)
- **Fujisaki Declaration**

* * *

DISCUSSION REGARDING SUBSTANTIAL NEW QUESTION OF PATENTABILITY

7. The Request, on pages 24-26, alleges the following substantial new questions of patentability

(SNQs) based on the above identified cited references:

SNQ 1- FUJISAKI '200 IN VIEW OF THE FUJISAKI DECLARATION

The Request (pp. 24-25) alleges that Fujisaki '200 as understood in the new light of the Fujisaki Declaration raises a substantial new question of patentability to claim 1 of the Lekhtman '753 patent. It is noted that the Fujisaki '200 reference has been extensively discussed and used to form bases of rejections in both the 90/010,366 and merged 90/010,366/90/010,612 reexamination proceedings. The Fujisaki Declaration was not previously discussed by the examiner nor applied to claim 1 in the prior examination or reexaminations of the Lekhtman '753 patent.

The Request asserts that Fujisaki '200 in view of the Fujisaki Declaration is new because the Fujisaki Declaration is "new evidence that the heart rate monitor disclosed in Fujisaki '200 is enabled." It is also asserted that the Fujisaki Declaration is evidence that the heart rate monitor in Fujisaki '200 "was manufactured and sold and provided useful, accurate, and precise heart rate information" (see Request, p. 24).

The new light cast upon Fujisaki '200 by the Fujisaki Declaration has been thoroughly considered. However the teaching that the heart rate monitor as disclosed in Fujisaki '200 was enabled with "useful accuracy and precision" does not appear to be relevant/important to the claim language that was paramount to the determination of patentability in the prior examination or reexaminations of the Lekhtman '753 patent. As noted above, the Fujisaki '200

reference was utilized extensively in rejections in the prior reexaminations whereby the heart rate monitor of the Fujisaki '200 reference had been considered fully enabled for performing the functionality described in Fujisaki '200. Thus, there is not a substantial likelihood that a reasonable examiner would have considered the teachings important in deciding whether or not the instant claim is patentable. Accordingly, Fujisaki '200 in view of the Fujisaki Declaration does not raise an SNQ as to claim 1 of the Lekhtman '753 patent.

Additionally, the examiner notes that 35 U.S.C. 301 states as follows:

"Any person at any time may cite to the Office in writing *prior art consisting of patents or printed publications* which that person believes to have a bearing on the patentability of any claim of a particular patent."

The examiner notes that the submitted Fujisaki Declaration is not considered a patent or printed publication, and therefore is not a valid prior art reference for reexamination. Affidavits or declarations or other written evidence may be considered where they explain the contents or pertinent dates of prior art patents or printed publications in more detail, but a rejection in such circumstances cannot be based on the affidavits or declarations as such, but must be based on the prior art patents or printed publications. (MPEP 2258(I)(E)).

* * *

Oscilloscope **'753 Patent Figure 2 (JA1109)**

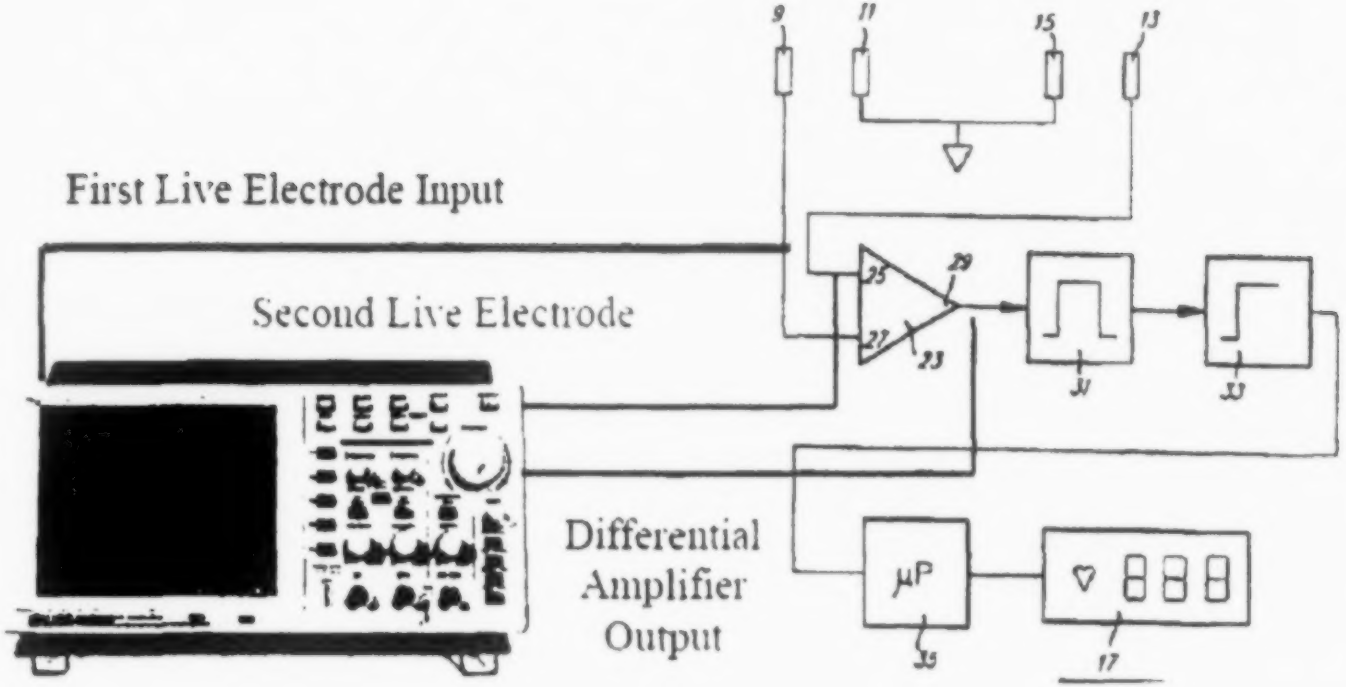

PETITIONER'S BRIEF

RECORD
AND
BRIEFS

No. 13-369

Supreme Court, U.S.
FILED
FEB 24 2014
OFFICE OF THE CLERK

IN THE
Supreme Court of the United States

NAUTILUS, INC.,

Petitioner,

v.

BIOSIG INSTRUMENTS, INC.,

Respondent.

On Writ Of Certiorari
To The United States Court Of Appeals
For The Federal Circuit

BRIEF FOR PETITIONER

THOMAS G. HUNGAR
MATTHEW D. MCGILL
JONATHAN C. BOND
GIBSON, DUNN & CRUTCHER LLP
1050 Connecticut Avenue, N.W.
Washington, D.C. 20036
(202) 955-8500

JAMES E. GERINGER
JEFFREY S. LOVE
JOHN D. VANDENBERG
Counsel of Record
PHILIP WARRICK
KLARQUIST SPARKMAN, LLP
One World Trade Center
Suite 1600
121 S.W. Salmon Street
Portland, OR 97204
(503) 595-5300
john.vandenberg@klarquist.com

Counsel for Petitioner

Library of Congress
Law Library

QUESTIONS PRESENTED

Section 112, ¶ 2, of the Patent Act requires that a patent specification "conclude with one or more claims particularly pointing out and distinctly claiming the subject matter which the applicant regards as his invention." 35 U.S.C. § 112, ¶ 2. "The statutory requirement of particularity and distinctness in claims," this Court has held, "is met only when they clearly distinguish what is claimed from what went before in the art and clearly circumscribe what is foreclosed from future enterprise." *United Carbon Co.* v. *Binney & Smith Co.*, 317 U.S. 228, 236 (1942). The Federal Circuit, however, holds that a claim satisfies Section 112, ¶ 2, even if "'reasonable persons will disagree'" over the claim's meaning and scope, so long as the claim is "'amenable to construction'" and the construction of the claim adopted by the court is not "'insolubly ambiguous.'" Pet. App. 13a, 22a (citations omitted). The questions presented are:

1. Does the Federal Circuit's acceptance of ambiguous patent claims with multiple reasonable interpretations—so long as the ambiguity is not "insoluble" by a court—defeat the statutory requirement of particular and distinct patent claiming?

2. Does the presumption of validity dilute the requirement of particular and distinct patent claiming?

PARTIES TO THE PROCEEDING AND RULE 29.6 STATEMENT

Petitioner, which was defendant-appellee below, is Nautilus, Inc.

Respondent, which was plaintiff-appellant below, is Biosig Instruments, Inc.

Nautilus, Inc., has no parent corporation, and no publicly held corporation owns 10% or more of its stock.

TABLE OF CONTENTS

Page

OPINIONS BELOW 1

JURISDICTION 1

CONSTITUTIONAL AND STATUTORY PROVISIONS INVOLVED 1

INTRODUCTION 1

STATEMENT 5

SUMMARY OF ARGUMENT 20

ARGUMENT 22

I. THE PATENT ACT REQUIRES THAT THE SCOPE OF PATENT RIGHTS BE CLEARLY DEFINED AND FORBIDS AMBIGUOUS PATENT CLAIMS 22

A. THE PATENT ACT'S PLAIN TEXT FORECLOSES CLAIMS WHOSE SCOPE IS AMBIGUOUS 23

B. THIS COURT'S PRECEDENT CONFIRMS THAT PERMITTING AMBIGUOUS PATENT CLAIMS CONTRAVENES THE STATUTE'S PURPOSES 27

C. THERE IS NO VALID JUSTIFICATION FOR THE FEDERAL CIRCUIT'S DEPARTURE FROM THE STATUTORY DEFINITENESS STANDARD 37

II. RESPONDENT'S CLAIMS ARE INDEFINITE UNDER THE CORRECT STATUTORY STANDARD 47

CONCLUSION 52

APPENDIX: Constitutional And Statutory Provisions Involved ..... App. 1a

U.S. Const. art. I, § 8, cl. 8 ..... App. 1a

Act of Apr. 10, 1790, ch. 7, § 2, 1 Stat. 109, 110 ..... App. 1a

Act of Feb. 21, 1793, ch. 11, § 3, 1 Stat. 318, 321 ..... App. 2a

Act of July 4, 1836, ch. 357, § 6, 5 Stat. 117, 119 ..... App. 3a

Act of July 8, 1870, ch. 230, § 26, 16 Stat. 198, 201 ..... App. 4a

Pub. L. No. 82-593, § 112, 66 Stat. 792, 798 (1952) ..... App. 5a

35 U.S.C. § 111(a) (2011) ..... App. 6a

35 U.S.C. § 112 (2011) ..... App. 7a

35 U.S.C. § 161 (2011) ..... App. 8a

35 U.S.C. § 162 (2011) ..... App. 9a

35 U.S.C. § 251 (2011) ..... App. 9a

35 U.S.C. § 282 (2011) ..... App. 10a

TABLE OF AUTHORITIES

Page(s)

CASES

Allison Engine Co. v. *United States ex rel. Sanders*,
553 U.S. 662 (2008) 26

Bonito Boats, Inc. v. *Thunder Craft Boats, Inc.*,
489 U.S. 141 (1989) 28

Eibel Process Co. v. *Minn. & Ontario Paper Co.*,
261 U.S. 45 (1923) 36, 44

Enzo Biochem., Inc. v. *Applera Corp.*,
605 F.3d 1347 (Fed. Cir. 2010) 31, 38

Evans v. *Eaton*,
20 U.S. (7 Wheat.) 356 (1822) 7, 30, 32

Exxon Research & Eng'g Co. v. *United States*,
265 F.3d 1371 (Fed. Cir. 2001) 37, 43, 46

Festo Corp. v. *Shoketsu Kinzoku Kogyo Kabushiki Co.*,
535 U.S. 722 (2002) 28, 34

Gen. Elec. Co. v. *Wabash Appliance Corp.*,
304 U.S. 364 (1938) 3, 22, 26, 27, 28, 32, 34, 35, 36, 41, 42, 50, 51

Halliburton Oil Well Cementing Co. v. *Walker*,
329 U.S. 1 (1946) 36

Hearing Components, Inc. v. *Shure Inc.*,
600 F.3d 1357 (Fed. Cir. 2010) 38

Keystone Bridge Co. v. *Phoenix Iron Co.*,
95 U.S. 274 (1877) 7, 33, 34

Markman v. *Westview Instruments, Inc.*,
517 U.S. 370 (1996) 5, 6, 7, 34, 36, 42

Mayo Collaborative Servs., Inc. v.
Prometheus Labs., Inc.,
132 S. Ct. 1289 (2012) 28

Merrill v. *Yeomans*,
94 U.S. 568 (1877) 8, 32, 35

Microsoft Corp. v. *AT&T Corp.*,
550 U.S. 437 (2007) 5

Microsoft Corp. v. *i4i Ltd. P'ship*,
131 S. Ct. 2238 (2011) 40, 41, 42

Minerals Separation, Ltd. v. *Hyde*,
242 U.S. 261 (1916) 46

Permutit Co. v. *Graver Corp.*,
284 U.S. 52 (1931) 28

Praxair, Inc. v. *ATMI, Inc.*,
543 F.3d 1306 (Fed. Cir. 2008) 38

Radio Corp. of Am. v. *Radio Eng'g Labs., Inc.*,
293 U.S. 1 (1934) 40

Russello v. *United States*,
464 U.S. 16 (1983) 26

Sandifer v. *U.S. Steel Corp.*,
134 S. Ct. 870 (2014) 23

United Carbon Co. v. *Binney & Smith Co.*,
317 U.S. 228 (1942) 3, 22, 29, 33, 34,
35, 36, 39, 43, 51

United States v. *Adams*,
383 U.S. 39 (1966) 35

United States v. *Armilio*,
705 F.2d 939 (8th Cir. 1983) 41

United States v. *Berardi*,
629 F.2d 723 (2d Cir. 1980) 41

United States v. *Farnham*,
791 F.2d 331 (4th Cir. 1986) 41

United States v. *Giacalone*,
587 F.2d 5 (6th Cir. 1978) 41

United States v. *Hausmann*,
711 F.2d 615 (5th Cir. 1983) 41

United States v. *Larranaga*,
787 F.2d 489 (10th Cir. 1986) 41

United States v. *Martinez*,
855 F.2d 621 (9th Cir. 1988) 41

United States v. *Watson*,
623 F.2d 1198 (7th Cir. 1980) 41

Universal Oil Prods. Co. v. *Globe Oil & Ref. Co.*,
322 U.S. 471 (1944) 32, 35, 43

Warner-Jenkinson Co. v. *Hilton Davis Chem. Co.*,
520 U.S. 17 (1997) 45

White v. *Dunbar*,
119 U.S. 47 (1886) 7, 30, 32

Winans v. *Denmead*,
56 U.S. (15 How.) 330 (1854) 42

STATUTES

Act of Apr. 10, 1790, ch. 7, 1 Stat. 109 6

Act of Feb. 21, 1793, ch. 11, 1 Stat. 318 6

Act of July 4, 1836, ch. 357, 5 Stat. 117 .....7, 24

Act of July 8, 1870, ch. 230, 16 Stat. 198 8

Leahy-Smith America Invents Act,
Pub. L. No. 112-29, 125 Stat. 284
(2011) 2, 17, 26

Pub. L. No. 82-593, 66 Stat. 792 (1952).....8, 24

28 U.S.C. § 1254 1

28 U.S.C. § 1295 1

28 U.S.C. § 1331 1

28 U.S.C. § 1338 1

35 U.S.C. § 111 23

35 U.S.C. § 112 (2011).....2, 5, 8, 15, 16,
20, 23, 36, 44, 51

35 U.S.C. § 154 5

35 U.S.C. § 161 (2011).....26

35 U.S.C. § 162 (2011).....26

35 U.S.C. § 282 (2011).....16, 21, 23, 39, 43

35 U.S.C. § 311 12

OTHER AUTHORITIES

Natasha N. Aljalian, *The Role of Patent Scope in Biopharmaceutical Patents*, 11 B.U. J. Sci. & Tech. L. 1 (2005) 30

James Bessen & Michael J. Meurer, *Patent Failure* (2008) 30

Robert C. Faber, *Faber on Mechanics of Patent Claim Drafting* (6th ed. 2013).....31

Federal Trade Comm'n, *The Evolving IP Marketplace: Aligning Patent Notice and Remedies with Competition* (2011).....29

Robert D. Fish, *Strategic Patenting* (2007) 31

Herbert Hovenkamp, *Patents, Property, and Competition Policy*, 34 J. Corp. L. 1243 (2009).....30

Samuel Johnson, *A Dictionary of the English Language* (6th ed. 1785) 24

Ex Parte Lund, LLC, No. 2010-5851, 2010 WL 1904319 (B.P.A.I. May 10, 2010).....12

Ex Parte Miyazaki, No. 2007-3300, 2008 WL 5105055 (B.P.A.I. Nov. 19, 2008) 29, 45

Moy's Walker on Patents (4th ed. update 2013) 6

Kelly Casey Mullally, *Legal (Un)certainty, Legal Process, and Patent Law*, 43 Loy. L.A. L. Rev. 1109 (2010) 30

Craig Allen Nard, *Legal Forms and the Common Law of Patents*, 90 B.U. L. Rev. 51 (2010) 7

David Pressman, *Patent it Yourself* (16th ed. 2012) 31

Jeffrey G. Sheldon, *How to Write a Patent Application* (2005) 31

Harry Surden, *Efficient Uncertainty in Patent Interpretation*, 68 Wash. & Lee L. Rev. 1737 (2011) 30, 44

U.S. Patent & Trademark Office, *Manual of Patent Examining Procedure* (8th ed. Rev. 9, Aug. 2012) 4, 5, 29, 38, 44, 45

Noah Webster, *A Dictionary of the English Language* (Goodrich & Porter eds. 1872) 24, 25, 50

Webster's New International Dictionary (2d ed. 1949) 24

Webster's Third New International Dictionary (2002) 25

George F. Wheeler, *Creative Claim Drafting: Claim Drafting Strategies, Specification Preparation, and Prosecution Tactics*, 3 J. Marshall Rev. Intell. Prop. L. 34 (2003) 31

BRIEF FOR PETITIONER

Petitioner Nautilus, Inc., respectfully submits that the judgment of the court of appeals should be reversed.

OPINIONS BELOW

The court of appeals' opinion (Pet. App. 3a-32a) is reported at 715 F.3d 891. The court of appeals' order denying rehearing and rehearing en banc (Pet. App. 1a-2a) is unreported. The district court's order granting summary judgment for petitioner (Pet. App. 38a-39a) is unreported. The transcript of the summary-judgment hearing before the district court is reprinted at Pet. App. 50a-106a. The district court's order denying reconsideration of its summary-judgment order (Pet. App. 33a-35a) is unreported.

JURISDICTION

The district court had jurisdiction under 28 U.S.C. §§ 1331 and 1338(a). The court of appeals had jurisdiction under 28 U.S.C. § 1295(a)(1). The court of appeals entered its judgment on April 26, 2013. Pet. App. 3a. A timely petition for rehearing en banc was denied on June 28, 2013. Pet. App. 2a-3a. This Court has jurisdiction under 28 U.S.C. § 1254(1).

CONSTITUTIONAL AND STATUTORY PROVISIONS INVOLVED

All pertinent constitutional and statutory provisions are reprinted in the Appendix at 1a.

INTRODUCTION

Federal patent claims mark the boundaries between the exclusive rights of the inventor and the territory open to others for further innovation. For

well over a century, Congress has required that the metes and bounds of patent claims must be clear. Since 1870, the Patent Act has mandated that a patent claim "*particularly* poin[t] out and *distinctly* clai[m]" the patentee's invention. 35 U.S.C. § 112, ¶ 2 (2011) (emphases added). That emphatic language leaves no doubt that Congress intended to confer a federal monopoly for a patented invention *only if* the invention's scope is clearly defined.[1]

This Court has consistently construed that statutory command to foreclose ambiguous patent claims whose scope is not reasonably certain. A claim whose scope, read in light of the specification by one skilled in the art, is susceptible of more than one reasonable interpretation falls short of that standard. Not only the statute's language, this Court has explained, but the fundamental purposes that Congress enacted the provision to achieve, compel holding patent claims to a high standard of definiteness. Patent claims define the patentee's rights against the public at large, and accordingly must provide clear notice to all of what they encompass. Clear boundaries thus are critical to apprise the public of what is still fair game and what is off-limits. "The inventor must 'inform the public during the life of the patent of the limits of the monopoly asserted, so

---

[1] Section 112 was amended in minor respects (including redesignation of its paragraphs as subsections) by the Leahy-Smith America Invents Act, Pub. L. No. 112-29, § 4(c), 125 Stat. 284, 296 (2011), but those amendments do not apply here. The amendments apply only to a "patent application that is filed on or after" September 16, 2012, *see id.* § 4(e), 125 Stat. at 297; the application for the patent in dispute here was filed in 1992, J.A. 40. This brief refers throughout to the version of Section 112 in effect prior to the America Invents Act.

that it may be known which features may be safely used or manufactured without a license and which may not.'" *Gen. Elec. Co.* v. *Wabash Appliance Corp.*, 304 U.S. 364, 369 (1938) (citation omitted). If a claim's limits are imprecise, the result is a "zone of uncertainty" that inhibits innovation by others almost as much as a flat prohibition. *United Carbon Co.* v. *Binney & Smith Co.*, 317 U.S. 228, 236 (1942). Patent drafters, well aware of this, have powerful incentives to draft claims that are ambiguous to discourage others from innovating better solutions within this zone of uncertainty.

Faithfully construing and enforcing the statutory mandate of Section 112, ¶ 2, that claims "particularly poin[t] out and distinctly clai[m]" the invention are crucial to the patent system's proper functioning. Other inventors and entrepreneurs cannot invest with confidence in developing new inventions if they cannot know what existing patents cover. And courts faced with patent claims that plausibly might be given any of multiple reasonable interpretations must expend already-scarce time and resources ascertaining what the purported invention is before they can adjudicate whether that invention meets the other criteria for a patent. Applying Section 112, ¶ 2, as written, in contrast, to forbid ambiguous claims whose scope is susceptible of multiple reasonable interpretations, enables efficient investment by others in new innovation, and makes courts' work much easier. Indeed, the Patent and Trademark Office ("PTO") applies that test every day. The Patent Act, in short, sets a high standard of clarity that patent claims must meet, and there is every reason to give the statutory standard full effect.

Under the rule of law followed below, in contrast, a patent claim is good enough under Section 112, ¶ 2, so long as it is "'amenable to construction,'" and so long as the claim, as "'construed'" by a court, is not "'insolubly ambiguous.'" Pet. App. 13a (citations omitted). As the PTO has aptly summarized Federal Circuit law, "the validity of a claim will be preserved if *some meaning* can be gleaned from the language." U.S. Patent & Trademark Office, *Manual of Patent Examining Procedure* § 2173.02(I) (8th ed. Rev. 9, Aug. 2012) ("*MPEP*") (emphasis added). The Federal Circuit has explained, moreover, that in its view a claim can be clear enough to satisfy Section 112, ¶ 2, "'even though . . . reasonable persons will disagree'" over the claim's scope. Pet. App. 22a. On that basis, both the Federal Circuit majority and concurring opinions concluded that the disputed claims in respondent Biosig Instruments, Inc.'s patent are sufficiently definite, even though the opinions interpreted the claims' scope in two very different ways.

Both the "insolubly ambiguous" standard and the result it yielded here are fundamentally at odds with the Patent Act's text, Congress's purposes, and this Court's teaching. The approach followed below, moreover, inflicts tremendous harm on the patent system. The "insolubly ambiguous" standard strengthens a patent drafter's existing incentives to draft some ambiguous claims in the hope of creating a *de facto* penumbra enlarging the patentee's monopoly beyond its invention. And that standard foments frequent disputes about claims' proper construction, inviting litigants to advocate strained, litigation-motivated interpretations of a claim with no fear that doing so will cause a court to question whether the claim itself is indefinite. The "insolubly ambigu-

ous" test thus encourages the very abuses that Congress added the claim requirement to prevent.

The court of appeals' interpretation of Section 112, ¶ 2, is untenable, and its misapplication of the statute here well illustrates its error. This Court should repudiate the "insolubly ambiguous" standard, which departs from the statute's prohibition on ambiguous claims, and it should reaffirm the standard established by Section 112, ¶ 2, and consistently applied by this Court. And, to provide much-needed guidance to lower courts in applying the statutory standard, the Court should illustrate its application here by holding respondent's claims indefinite.

STATEMENT

1. A federal patent confers on the patentee the exclusive right to make, use, or sell the patented invention in the United States for a fixed period. *See* 35 U.S.C. § 154(a)(1); *Microsoft Corp.* v. *AT&T Corp.*, 550 U.S. 437, 455 (2007). The "scope of a patent grant" is "define[d]" by the patent's "'claims'"—statements at the end of the patent's specification that must "'particularly poin[t] out and distinctly clai[m] the subject matter which the applicant regards as his invention.'" *Markman* v. *Westview Instruments, Inc.*, 517 U.S. 370, 373 (1996) (quoting 35 U.S.C. § 112, ¶ 2; other internal quotation marks omitted).

Patent claims are the basic unit of analysis both in determining whether a patent should issue and in ascertaining whether an issued patent has been infringed. The PTO, charged with issuance of patents, *see* 35 U.S.C. § 153, determines whether the statutory requirements for a patent are satisfied with respect to each claim in a patent. *See MPEP* § 2103.

And, once a patent has issued, the claims mark the boundaries of the patentee's exclusive rights. A patentee who alleges that his rights have been infringed must demonstrate "that the patent claim covers the alleged infringer's product or process." *Markman*, 517 U.S. at 374 (internal quotation marks omitted).

2. Although patent claims were unknown at English law, *see Markman*, 517 U.S. at 378-79, they have been an integral feature of our federal patent law for more than 170 years. And the core requirement that claims now embody—requiring an inventor himself to identify his asserted invention clearly and particularly—dates to the beginning of the Republic.

a. The first American patent statutes required a patent's written description of the invention to mark the invention's boundaries and distinguish it from the prior art. The Patent Act of 1790, Act of Apr. 10, 1790, ch. 7, 1 Stat. 109, mandated that a patentee submit a "specification in writing, containing a description . . . of the thing or things, by him . . . invented or discovered," which "shall be so particular" as "to distinguish the invention or discovery from other things before known and used." *Id.* § 2, 1 Stat. at 110. Congress was even more emphatic when it revised the statute three years later, requiring an inventor to "deliver a written description of his invention . . . in such full, clear and exact terms, as to distinguish the same from all other things before known." Act of Feb. 21, 1793, ch. 11, § 3, 1 Stat. 318, 321.

b. Over time, many patentees began identifying the claimed invention's scope separately in the patent. *See* 1 *Moy's Walker on Patents* § 4:2 (4th ed.

update 2013); Craig Allen Nard, *Legal Forms and the Common Law of Patents*, 90 B.U. L. Rev. 51, 66-67 (2010). In its next major revision of the Patent Act, Congress made this practice mandatory. The Patent Act of 1836 required that a patentee—in addition to submitting a "written description of his invention" sufficient to "enable" others "to make, construct, compound, and use" it—must *also* "particularly specify and point out the part, improvement, or combination, which he *claims* as his own invention or discovery." Act of July 4, 1836, ch. 357, § 6, 5 Stat. 117, 119 (emphasis added) ("1836 Act").

Congress codified patent claims as a "statutory requirement," and required them to specify the invention particularly, "for the very purpose of making the patentee define precisely what his invention is," and by doing so, to protect the "public" from "unjust" expansion of patent rights. *White* v. *Dunbar*, 119 U.S. 47, 52 (1886). Patents with unclear boundaries enable a patentee to "practis[e] upon the credulity or the fears of other persons, by pretending that his invention is more than what it really is." *Evans* v. *Eaton*, 20 U.S. (7 Wheat.) 356, 434 (1822). Congress also sought to "reliev[e] the courts from the duty of ascertaining the exact invention of the patentee by inference and conjecture, derived from a laborious examination" of the specification and the prior art. *Keystone Bridge Co.* v. *Phoenix Iron Co.*, 95 U.S. 274, 278 (1877). This task was "cast upon the Patent Office" (now the PTO), where the "claim is, or is supposed to be, examined, scrutinized, limited, and made to conform to what [the patentee] is entitled to." *Ibid.* In the ensuing years, courts increasingly relied on patents' claims in ascertaining the invention's scope. *See Markman*, 517 U.S. at 379.

c. Congress cemented this change in 1870, explicitly requiring that a patent include "claims," distinct from the patent's written description of the invention, that both identify the purported invention and distinctly claim its scope. Act of July 8, 1870, ch. 230, § 26, 16 Stat. 198, 201 ("1870 Act"). The 1870 Act mandated that a patent application "particularly point out and distinctly claim the part, improvement, or combination which [the patentee] claims as his invention or discovery." *Ibid.* And it expressly distinguished the patent's claims from the remainder of the specification. *See ibid.* ("said specification *and claim* shall be signed by the inventor and attested by two witnesses" (emphasis added)). The "distinct and formal claim" thus became "of primary importance, in the effort to ascertain precisely what it is that is patented." *Merrill* v. *Yeomans*, 94 U.S. 568, 570 (1877).

Congress carried over this requirement that a patentee "particularly point out and distinctly claim" his invention into the modern patent statute, enacted in 1952, which (with irrelevant changes) remains in force today. *See* Pub. L. No. 82-593, § 112, ¶ 2, 66 Stat. 792, 798 (1952) ("1952 Act"). Section 112 of the 1952 Act provided that the patent's "specification shall conclude with one or more claims particularly pointing out and distinctly claiming the subject matter which the applicant regards as his invention." *Ibid.*, *codified as amended at* 35 U.S.C. § 112, ¶ 2 (2011).[2]

---

[2] As noted above, Section 112, ¶ 2, of Title 35 has since been amended and redesignated as Section 112(b), but those amendments are not applicable to this case and do not change the statutory standard. *See supra* at 2 n.1.

3. This case concerns a patent—issued to Gregory Lekhtman in 1994, and later assigned to respondent Biosig—for a heart-rate monitor for use in connection with exercise equipment, exercise activities, or both (the "Lekhtman Patent"). *See* Pet. App. 4a; J.A. 40. The nature and parameters of Lekhtman's invention are disputed, but in essence it consists of a hollow cylinder or baton, which a user holds with both hands; electronic circuitry housed in the cylinder detects electrical signals produced by heartbeats and measures the user's heart rate. *See* Pet. App. 4a-6a; J.A. 52-67. The issued patent illustrated the outside of the device as follows:

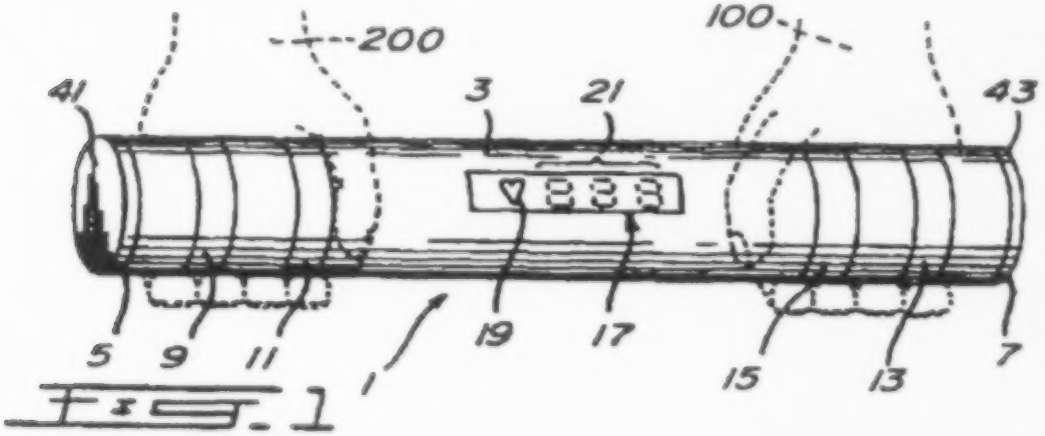

J.A. 42; *see also id.* at 68 (illustration of monitor in patent application). The monitor is called a "contact" monitor, because it provides contacts with the user's hands.

Contact heart-rate monitors were not new when Lekhtman applied for the patent in 1992. Among others, Lekhtman himself had received a patent for another monitor years earlier. *See* C.A. J.A. 267. According to Lekhtman, however, his prior monitor failed to remove electrical signals emitted by a user's skeletal muscles during exercise—known as electro-

myogram or "EMG" signals (hereinafter "muscle signals")—generated, for example, when the user moved his arms or squeezed the monitor. Pet. App. 4a; J.A. 52. And "[b]ecause [muscle] signals are of the same frequency range as electrical signals generated by the heart"—known as electrocardiograph or "ECG" signals (hereinafter "heart signals")—"[muscle] signals can mask [heart] signals," making it difficult to measure heart rates accurately. Pet. App. 4a.

Lekhtman's new monitor purportedly solved this problem. According to the patent, his monitor "process[ed] [heart] signals from which [muscle] signals are substantially removed," thus enabling determination of the heart rate. Pet. App. 5a; *see* J.A. 53, 62-63. *How* Lekhtman's monitor claimed to achieve this is at the center of the parties' dispute here.

The Lekhtman Patent first recited a list of features of his monitor: Two surface electrodes are mounted on each side of the cylinder—on each side, one "live" electrode, and one "common" electrode, "in *spaced relationship* with each other." J.A. 53 (emphasis added). The patent did not specifically define or further elaborate on this "spaced relationship," or suggest that it was a term of art. The common electrodes on each side are connected to each other and to a point of common potential, such as ground. *Ibid.* The two live electrodes are connected to a "difference amplifier"—a standard device used in electric circuits that outputs the difference between two input signals. *Id.* at 54. The user would hold the monitor, with one hand on each side, and the electrodes would detect the heart and muscle signals emitted by each hand. *Id.* at 62; *see also id.* at 52-54.

This basic structure of four surface electrodes wired in this manner to a difference amplifier closely

resembled a similar heart-rate monitor covered by an earlier patent, issued to Iwao Fujisaki and others in 1984 (the "Fujisaki Patent"). *See* Pet. App. 9a; J.A. 180. After reciting these structural features of Lekhtman's design, however, the Lekhtman Patent continued: "*whereby*, a first [muscle] signal will be detected between" the live and common electrodes on one side of the cylinder, "and a second [muscle] signal, *of substantially equal magnitude and phase* to [the] first [muscle] signal will be detected" between the live and common electrodes on the other side of the cylinder. J.A. 62 (emphases added). These muscle signals, the patent explained, would be fed into the "difference amplifier," where—because they would be equal in magnitude and phase—they would cancel each other out. *See ibid.* The heart signals detected from each hand, however, would (according to the Lekhtman Patent) be "of substantially equal magnitude but of *opposite* phase," and so would not be cancelled out, but amplified, when fed into the difference amplifier. *Id.* at 63 (emphasis added); *see also id.* at 52-54. The patent did not specify whether the muscle signals' magnitude and phase would be equal *because of* the specific configuration of Lekhtman's monitor—such as the placement and size of the various electrodes or how the electrodes are connected—or instead for reasons *unrelated* to the monitor's design (*e.g.*, because muscle signals in a person's hands are always equal due to laws of nature).

As relevant here, the Lekhtman Patent claimed (in claim 1) this monitor, purportedly capable of detecting heart signals (by removing muscle signals) to measure one's heart rate. Pet. App. 6a-7a; *see* J.A. 61-63. The patent also included a claim (claim 11) for the same monitor "mounted on an exercise apparatus." Pet. App. 7a; *see* J.A. 66; *see also id.* at 51 (il-

lustrations of monitor mounted on stationary bicycle and stair-climbing machine). The PTO issued the patent, including these claims, in 1994. *Id.* at 40.

4. This litigation stems from a dispute between Biosig—assignee of the Lekhtman Patent—and Nautilus's alleged predecessor-in-interest, the Stairmaster Company. Pet. App. 8a, 53a. Biosig alleges that "in the 1990's," it "disclosed the patented technology" to Stairmaster. J.A. 26. According to Biosig, Stairmaster began making and selling exercise equipment that included heart-rate monitors that infringed the Lekhtman Patent, without securing a license from Biosig. *Ibid.* Biosig alleges that Nautilus, after acquiring Stairmaster's assets, continued to make and sell infringing equipment. *Ibid.*; *see* Pet. App. 8a, 53a. Based on these allegations, Biosig sued Nautilus for patent infringement in 2004 in the Southern District of New York. Pet. App. 8a, 53a.

In 2008, while Biosig's original suit was pending, Nautilus asked the PTO to reexamine the Lekhtman Patent, asserting, *inter alia*, that Lekhtman's monitor was anticipated by and obvious in light of the Fujisaki Patent. C.A. J.A. 418-518.[3] The PTO agreed to reexamine the Lekhtman Patent. *Id.* at 362-69. The parties voluntarily dismissed Biosig's suit without prejudice while the reexamination proceedings were pending. Pet. App. 9a. Upon reexamining the Lekhtman Patent, the PTO issued a preliminary de-

---

[3] Third parties may not seek reexamination on the ground that an original claim in a patent issued by the PTO is indefinite. *See* 35 U.S.C. § 311; *Ex Parte Lund, LLC*, No. 2010-5851, 2010 WL 1904319, at *2 (B.P.A.I. May 10, 2010). The reexamination proceedings in the PTO here thus did not address whether respondent's previously issued claims are indefinite.

termination in April 2009 (known as an "office action") rejecting (as relevant) claims 1 and 11 as anticipated by and obvious over the Fujisaki Patent, respectively. *Ibid.*; *see* C.A. J.A. 346-56.

Biosig submitted a lengthy response to the PTO defending the validity of the Lekhtman Patent. C.A. J.A. 184-343. The response included a 33-page declaration by Lekhtman, executed in 2009, in which he attempted to distinguish his monitor from Fujisaki's. J.A. 141. Lekhtman asserted, for example, that the size and spacing of the electrodes in his design differed from Fujisaki's. In Fujisaki's device, the electrodes are "wide" and "closely spaced," with the space between electrodes "narrower than the width of each electrode." *Id.* at 158-59. Consequently, "the surface areas of contact between the hand and each detector will vary from person to person and for a given person will vary as the position of the hands changes during heavy exercise." *Id.* at 158. As a result, the muscle signals "detected at the left and right hands cannot be substantially equal" using Fujisaki's device. *Ibid.* Lekhtman asserted that in his device, in contrast, the two electrodes touched by each hand are "relatively narrow and spaced apart," with the space between electrodes "wider than the width of each electrode." *Id.* at 159.[4]

---

[4] Despite this description, elsewhere in Lekhtman's declaration he quoted approvingly the view of an expert retained by Biosig for litigation, Dr. Henrietta Galiana, who described Lekhtman's device as having "*closely* spaced electrodes" and whose "mock-up" of Lekhtman's "invention" had a spacing between electrodes *narrower* than the width of each electrode. J.A. 166-68 (emphasis added).

Lekhtman contended in his 2009 declaration, moreover, that the spacing of electrodes in his monitor was crucial to its functioning. "[C]are must be taken," he explained, "to configure the system so that" the muscle signals effectively cancel one another out, producing "substantially zero [muscle signal] contribution at the output of the differential amplifier." J.A. 165. Lekhtman's declaration outlined a test—not mentioned in his patent—by which he asserted that one could determine, by "trial and error," while grasping the monitor in three different ways, "the optimum configuration of the spacing, size, shape and materials" for the electrodes in his device, which he asserted would vary from one application to another. *Id.* at 155-56, 158, 175-76.

In light of this new information, Nautilus submitted a second request for reexamination, again contending that Lekhtman's monitor was not patentable given the Fujisaki Patent. Pet. App. 9a. The PTO again agreed to reexamine the Lekhtman Patent and consolidated the two reexamination requests. *See* C.A. J.A. 166-81. In 2010, it issued a decision confirming the validity of the Lekhtman Patent. Pet. App. 9a; J.A. 78, 197-200.

5. In October 2010, after the PTO reexamination proceedings concluded, Biosig recommenced its infringement suit against Nautilus in the district court. The court conducted a hearing to construe disputed terms in the claims of the Lekhtman Patent. Pet. App. 10a. Among other terms, the parties disputed the meaning of the "spaced relationship" between the live and common electrodes on each side of the monitor. Based on Lekhtman's submissions to the PTO during the reexamination proceedings, the district court tentatively concluded that the "spaced

relationship must be greater than the width of each electrode," and the exact spacing would be determined through "trial and error." J.A. 255-56.

Biosig objected to this interpretation, however, asserting that the appropriate spacing between electrodes (and the optimal size, shape, and material) varies depending on the exercise machine in which Lekhtman's monitor is used. Though expressing misgivings about Biosig's reading, and noting that it might render the patent fatally ambiguous and thus invalid, *see* J.A. 256-57, the district court modified its interpretation and construed "spaced relationship" to mean "a defined relationship" between the live and common electrodes, which could be "the same or . . . different" on each side. Pet. App. 43a-44a.

6. Nautilus then moved for summary judgment, arguing (as relevant) that the Lekhtman Patent was indefinite, and thus invalid, under 35 U.S.C. § 112, ¶ 2, because the term "spaced relationship" as used in the patent was ambiguous and failed to "particularly poin[t] out and distinctly clai[m]" Lekhtman's invention. *Ibid.*; Pet. App. 10a. Biosig defended the patent, asserting—based on Lekhtman's 2009 declaration, and a new declaration by another expert, Dr. George Yanulis—that one skilled in the art could determine the appropriate "spaced relationship" through trial-and-error testing. Pet. App. 18a-20a.

After a hearing, Pet. App. 50a-106a, the district court concluded that the Lekhtman Patent was indefinite. *Id.* at 101a-103a. The term "spaced relationship," it held, "did not tell [the court] or anyone what precisely the space should be," and did not provide "any parameters as to what the space should be," or even indicate "whether the spaced relationship on the left side should be the same as the spaced

relationship on the right side." *Id.* at 72a-73a. Although the claim, the court noted, referred to the desired *result—i.e.*, detecting substantially equal muscle signals from each hand, such that the muscle signals would cancel one another out, leaving only heart signals, *see id.* at 94a—there was "nothing in the specifications or the claim or the file history to teach" one skilled in the art that a particular "proper spacing . . . should be used" to cancel out the muscle signals. *Id.* at 103a. The district court accordingly granted summary judgment, holding (as relevant) that claims 1 and 11 are indefinite under Section 112, ¶ 2, and therefore invalid. *Ibid.*

7. A divided panel of the court of appeals reversed. Pet. App. 4a. The panel majority and concurrence reached conflicting conclusions as to what the disputed claims mean. Yet both the majority and concurrence nevertheless determined that the claims are not indefinite. *Id.* at 15a-25a; *id.* at 29a-32a (Schall, J., concurring).

a. A patent claim's compliance with Section 112, ¶ 2, the majority noted, presents a "legal issue" that appellate courts "revie[w] without deference." Pet. App. 12a-13a (quoting 35 U.S.C. § 112, ¶ 2). Applying circuit precedent, the majority held that a patent claim satisfies Section 112, ¶ 2, so long as the claim is "'amenable to construction'" and the claim as "'construed'" by a court is not "'insolubly ambiguous.'" *Id.* at 13a (citations omitted). A claim may be definite "even though . . . reasonable persons will disagree" over the correct interpretation of the claim. *Id.* at 22a. "[E]mbracing this standard" of indefiniteness, the majority reasoned, "accord[s] respect to the statutory presumption of patent validity," codified in 35 U.S.C. § 282 (2011), and "protect[s] the inventive

contribution of patentees" whose "drafting of their patents has been less than ideal." Pet. App. 22a (internal quotation marks omitted).[5]

Applying this standard, the majority held that claims 1 and 11 of the Lekhtman Patent are not indefinite. Pet. App. 15a-25a. The term "spaced relationship" is "amenable to construction," it concluded, as shown by the fact that the district court itself construed that term before ruling that it was indefinite. *Id.* at 15a. Nor is "spaced relationship" "insolubly ambiguous." *Id.* at 25a. Although the patent did not "specifically define" the term or provide "actual parameters, *e.g.*, that the space between the live and common electrodes is one inch," one could infer from the patent specification at least some "inherent" limitations on the proper spacing between the electrodes, which "may be sufficient to understand the metes and bounds of 'spaced relationship.'" *Id.* at 16a. "For example," the majority suggested, the space between the live and common electrodes on each side of the monitor "cannot be greater than the width of a user's hands," since the electrodes must be in contact with the same hand. *Ibid.* And it would not be "feasible" if the "distance between the live and common electrodes" were "infinitesimally small," as that would "effectively merg[e] the live and common electrodes into a single electrode." *Ibid.*

---

[5] Section 282, like Section 112, was amended in minor respects by the America Invents Act in 2011, *see* Pub. L. No. 112-29, §§ 15(a), 20(g), 125 Stat. at 328, 334, but those amendments do not apply here. None of the amendments apply to proceedings commenced before September 16, 2011, *see id.* §§ 15(c), 20(*l*), 125 Stat. at 328, 335; this proceeding was commenced in October 2010, *see* J.A. 7, 23, 31.

Within these broad "inherent parameters," Pet. App. 16a, the majority explained, the monitor's *function* of removing muscle signals, so that heart signals can be measured, was "highly relevant in ascertaining the proper bounds of the 'spaced relationship.'" *Id.* at 17a; *see id.* at 16a-21a. Removing muscle signals was (according to the majority) Lekhtman's central purported innovation over the prior art—and the basis on which he attempted, during the PTO reexamination proceedings, to distinguish his invention from Fujisaki's monitor. *See id.* at 16a-17a. And evidence that Biosig submitted during the reexamination proceedings and in this litigation indicated (in the majority's view) that the configuration of the electrodes was essential to accomplishing that function. *See id.* at 18a-20a. In other words, the "'whereby' clause" in the patent—which stated that the muscle signals would be substantially equal, and thus would cancel one another out—"describes the *function* of substantially removing [muscle] signals that *necessarily follows* from the previously recited structure," including the "spaced relationship." *Id.* at 17a (emphases added). The term "spaced relationship," the majority reasoned, thus refers to the spacing necessary for substantially removing muscle signals. *See id.* at 17a-18a.

One skilled in the art, the majority determined, would be able to determine that spacing—essentially by trial and error. *See* Pet. App. 18a-21a. Lekhtman's 2009 declaration explained that an artisan, starting with some configuration of electrodes, could measure the muscle signals from each of the user's hands, and then "adjus[t]" the "spacing, size, shape and materials of the electrodes" until the difference between the muscle signals was "close to zero." *Id.* at 19a. Lekhtman asserted that when he applied for

the patent in 1992, one skilled in the art could have used a common device—an oscilloscope—"to measure the signals" and determine whether adjustments were necessary. *Ibid.* Lekhtman's declaration described tests he had performed illustrating how this could be done, and results reported by another Biosig expert who tested a purported embodiment of Lekhtman's invention. *Id.* at 19a-20a. A 2011 declaration of Biosig's expert in this litigation, Dr. Yanulis, "confirmed" Lekhtman's assertions. *Id.* at 20a.

Thus, the majority concluded, because "a skilled artisan could apply a test and determine the 'spaced relationship' as pertaining to the function of substantially removing [muscle] signals," the patent adequately specified the "metes and bounds of 'spaced relationship.'" Pet. App. 21a. "Nothing more rigorous," it held, "is required under § 112, ¶ 2." *Ibid.*

b. The concurrence, too, concluded that the disputed claims are not indefinite, but it interpreted the claims quite differently. Pet. App. 29a-32a (Schall, J., concurring). It agreed with the majority's articulation of existing circuit "law on indefiniteness," *id.* at 29a, and that the claims here are sufficiently definite under that standard. *Id.* at 30a-31a. The term "spaced relationship" "plainly was amenable to construction," since neither party "dispute[d] that the district court" itself "did, in fact, construe the 'spaced relationship' limitation." *Id.* at 30a. And the district court's "construction," the concurrence concluded, "provided sufficient clarity to one of skill in the art as to the 'metes and bounds' of the 'spaced relationship' limitation." *Id.* at 31a; *see also id.* at 29a-30a. The term, as construed, thus was not insolubly ambiguous, given the "'inherent parameters'" on that spacing that the majority had inferred from the patent—

i.e., that the space between electrodes must be greater than zero and no wider than the user's hand. *Id.* at 31a. The "spaced relationship," the concurrence opined, means any "fixed spatial relationship between" the electrodes within these "'inherent'" limits. *Ibid.*

In the concurrence's view, however, that is *all* that the term "spaced relationship" means. Pet. App. 31a-32a. According to the concurrence, the majority erroneously "presume[d] a functional linkage between the 'spaced relationship' limitation and the removal of [muscle] signals" that was not supported by the patent itself: Nothing in the claims imposed a "functional limitation" on the "spaced relationship" described in the claims. *Ibid.* Put differently, according to the concurrence, the patent did not claim that any particular spacing between electrodes—within the broad inherent parameters the majority noted—is essential to the monitor's ability to function. Thus, the term "spaced relationship" did not limit the claims to those heart-rate monitors that incorporated the trial-and-error spacing required by the majority's construction of the same claim term.

8. Nautilus sought rehearing en banc, asking the court of appeals to revisit its "insolubly ambiguous" test. C.A. Dkt. #46. Its request was denied. Pet. App. 2a.

SUMMARY OF ARGUMENT

I. The Patent Act requires that patent claims must "particularly poin[t] out and distinctly clai[m]" the invention. 35 U.S.C. § 112, ¶ 2. The ordinary meaning of the statute's words—both when enacted and today—is that claims must identify the invention clearly, plainly, singly, and not confusedly. That

mandate forecloses an ambiguous patent claim, whose scope, even to one skilled in the art reading the claims in light of the specification, is susceptible of multiple reasonable interpretations. Decisions of this Court dating back more than a century, moreover, make clear that the statute must be construed, consistent with its plain meaning, to bar ambiguous claims, which directly undermine the claim requirement's fundamental purposes: providing the public with fair notice of the scope of the inventor's exclusive rights, and enabling courts to adjudicate whether an invention is patentable without first having to canvass the prior art and compare it with the patent specification to ascertain what the purported invention *is*.

The court of appeals rejects this standard. It applies a much more lenient test, under which it will uphold a claim as definite so long as it is merely "'amenable to construction,'" and the claim as construed by a court is not "'insolubly ambiguous.'" Pet. App. 13a, 22a (citations omitted). That test is directly at odds with the text of Section 112, ¶ 2, the statute's purposes, and this Court's case law construing it. None of the court of appeals' justifications for its lax approach to enforcing Section 112, ¶ 2, withstands scrutiny. The presumption of patent validity, 35 U.S.C. § 282, which establishes a higher standard of proof for *factual* issues in challenges to a patent's validity, has no bearing on the standard set by Section 112, ¶ 2, to answer the undisputedly *legal* question whether a patent claim is definite. The Federal Circuit's worries that enforcing the statute as written will hamstring inventors or will invalidate every patent claim whose construction is disputed are unfounded and do not justify the court's departure from Congress's emphatic command.

II. Under the correct understanding of Section 112, ¶ 2, respondent's claims do not "particularly poin[t] out and distinctly clai[m]" the invention and are therefore indefinite. The majority and concurring opinions below—which adopted conflicting interpretations of the scope of the claims—readily demonstrate that the claims are subject to at least two reasonable interpretations and are therefore fatally ambiguous. Respondent's claims closely resemble others that this Court has previously held invalid for indefiniteness—the scope of which likewise was ambiguous even to one skilled in the art. *See, e.g.*, *United Carbon*, 317 U.S. at 236; *Gen. Elec.*, 304 U.S. at 369. The record compels the same conclusion here.

ARGUMENT

I. THE PATENT ACT REQUIRES THAT THE SCOPE OF PATENT RIGHTS BE CLEARLY DEFINED AND FORBIDS AMBIGUOUS PATENT CLAIMS.

The plain language of Section 112, ¶ 2—bolstered by more than a century of Supreme Court precedent recognizing Congress's purposes in enacting the provision—requires that patent claims delineate the purported invention with clarity and precision. An ambiguous claim whose scope is susceptible of multiple reasonable interpretations to one skilled in the relevant art falls short of the statutory standard. The court of appeals, however, expressly permits such claims, flouting the statutory mandate and this Court's teaching, and thwarting the purposes that Congress enacted the claim requirement to achieve.

A. The Patent Act's Plain Text Forecloses Claims Whose Scope Is Ambiguous.

The Patent Act's plain language requires claims to be clear and precise, and leaves no room for claims that are ambiguous. Section 111 of the Act requires an inventor seeking a patent to submit an application that contains, among other things, a "specification" of his asserted invention. 35 U.S.C. § 111(a)(2). Section 112 sets forth what the specification must contain. *Id.* § 112. With irrelevant exceptions, a patentee's failure to comply with Section 112's "requirement[s]" establishes a "defense" to the validity of the patent. *Id.* § 282, ¶ 2(3)(A), (4). Section 112, ¶ 1, requires that the specification "contain a written description of the invention, and of the manner and process of making and using it, in such full, clear, concise, and exact terms as to enable any person skilled in the art to which it pertains, or with which it is most nearly connected, to make and use the same, and . . . set forth the best mode contemplated by the inventor of carrying out his invention." *Id.* § 112, ¶ 1. That mandate is immediately followed by Section 112, ¶ 2—at issue here—which provides that "[t]he specification *shall* conclude with one or more claims *particularly pointing out and distinctly claiming* the subject matter which the applicant regards as his invention." *Id.* § 112, ¶ 2 (emphases added).

The "'ordinary, contemporary, common meaning'" of Section 112, ¶ 2's key words at the time that Congress first added them to the statute, as reflected in "[d]ictionaries from the era," *Sandifer* v. *U.S. Steel Corp.*, 134 S. Ct. 870, 876 (2014) (citation omitted), leaves no doubt that the scope of a patent claim must be clear and known and that ambiguous claims are forbidden. In 1870, when Congress first added the

requirement that patentees "shall particularly point out and distinctly claim" their invention, 1870 Act, § 26, 16 Stat. at 201, the word "particularly" meant, *inter alia*, "singly," "distinctly," or "[i]n a particular manner." Noah Webster, *A Dictionary of the English Language* 522 (Goodrich & Porter eds. 1872) ("Webster's 1872"). "Particular," in turn, meant, among other things, "[r]elating to a part or portion of any thing, or to a single person or thing," or "[c]learly distinguishable from others of its kind." *Ibid.* And "distinctly" was defined as "clearly," "plainly," or "[w]ith distinctness." *Id.* at 217; *see also ibid.* (defining "distinctness" as "[t]he quality or state of being distinct," and "distinct," *inter alia*, as "[h]aving the difference marked," "distinguished," and "[s]o separated as not to be confounded with any other thing; not confused").[6]

The words "particularly" and "distinctly" carried the same meaning when Congress recodified the claim requirement in Section 112 in 1952. 1952 Act, § 112, ¶ 2, 66 Stat. at 798; *see Webster's New International Dictionary* 1783 (2d ed. 1949) (defining "particularly" as, *inter alia*, "[i]n detail or in particulars," "individually," and "expressly"); *id.* at 756 (defining "distinctly" as, *inter alia*, "not confusedly; without

---

[6] The precursor to this provision of the 1870 Act—the provision added in 1836 requiring that a patentee "*particularly* specify and point out the part, improvement, or combination, which he claims as his own invention or discovery," 1836 Act, § 6, 5 Stat. at 119 (emphasis added)—carried the same emphatic meaning. *See, e.g.*, 2 Samuel Johnson, *A Dictionary of the English Language* s.v. "particularly" (6th ed. 1785) ("[d]istinctly," "singly"); 1 Johnson, *supra*, s.v. "distinctly" ("[n]ot confusedly," "without the confusion of one part with another," "[p]lainly," "clearly").

blending of one thing with another; hence clearly; obviously"). And they mandate the same high degree of clarity and precision today. *See Webster's Third New International Dictionary* 1647 (2002) (defining "particularly" as, *inter alia*, "in detail," "in the specific case of one person or thing as distinguished from others," "individually," and "specifically" (capitalization omitted)); *id.* at 659 (defining "distinctly" as, *inter alia*, "not confusedly," "without a blending or merging of one thing with another," "clearly," "obviously," and "unequivocally" (capitalization omitted)).

The plain import of Section 112, ¶ 2's "particularly point out and distinctly claim" requirement is thus that a patent claim's meaning must be "clea[r]" and "plai[n]," not ambiguous or "confused." Webster's 1872, at 217, 522. And the claim must "singly" identify one invention. *Id.* at 522. One skilled in the relevant art thus must be able to know from reading the claim's language in context what the one invention is that the patent encompasses. A claim cannot refer severally to any of multiple inventions and require a skilled artisan to guess which one is covered. Ambiguous claims—claims that read in context are susceptible to *more* than one reasonable interpretation—necessarily fall short of this standard established by the statutory text. If one skilled in the art cannot discern a claim's scope—the patent's metes and bounds—from reading the claim in context because he cannot tell which of two or more reasonable interpretations of the claim's scope is correct, the claim is *ipso facto* not "clear" or "plain." Such a claim, by definition, does not "singly" identify just one invention, and conveys only a "confused" understanding of the scope of the invention and thus of the patentee's exclusive rights.

Section 112, ¶ 2's objective standard of particularity and distinctness, moreover, does not vary depending on the ease or difficulty of drafting a claim to encompass a given invention. To satisfy Section 112, ¶ 2, a claim's scope must be clear and plain, full stop, or else it is invalid—regardless of whether it would have been burdensome for the patentee to provide greater clarity. If the text of Section 112 left any doubt, it is erased by another provision of the Patent Act that expressly lowers the standard for a certain sub-category of patents not applicable here. Section 161 of the Act permits patents for "new variet[ies] of plant." 35 U.S.C. § 161, ¶ 1. Section 162 permits the inventor to claim "the plant shown and described" in the specification, and provides that "[n]o plant patent shall be declared invalid for noncompliance with section 112 of this title if the description is as complete *as is reasonably possible*." *Id.* § 162, ¶¶ 1-2 (emphasis added).[7]

Congress thus well knows how to require only that a patent drafter has tried his best to satisfy Section 112, and has codified that lesser standard in another context. *Cf. Gen. Elec.*, 304 U.S. at 372 n.13 (noting that "[d]ifferent considerations may apply" in assessing definiteness of plant patents under the predecessor of Section 162). Congress's omission of any similar proviso in Section 112 confirms that it did not intend Section 112 to incorporate the same less stringent standard. *See Russello* v. *United States*, 464 U.S. 16, 23 (1983); *see, e.g.*, *Allison En-*

---

[7] Section 162, like Sections 112 and 282, was amended in 2011 by the America Invents Act, but the amendments do not apply to this case. Pub. L. No. 112-29, § 20(j), (*l*), 125 Stat. at 335; *supra* at 2 n.1, 17 n.5.

gine Co. v. *United States ex rel. Sanders*, 553 U.S. 662, 671 (2008) ("'[W]hen Congress includes particular language in one section of a statute but omits it in another section of the same Act, it is generally presumed that Congress acts intentionally and purposely in the disparate inclusion or exclusion.'" (citation omitted; alteration in original)). Except for those patents Congress has specifically excused, in short, the high standard of definiteness established by Section 112, ¶ 2's text must be obeyed.

B. This Court's Precedent Confirms That Permitting Ambiguous Patent Claims Contravenes The Statute's Purposes.

This Court's case law confirms that to achieve Congress's purposes in requiring "particular" and "distinct" patent claims, Section 112, ¶ 2, must be construed, consistent with its plain language, to forbid ambiguous claims. The claim requirement's core objectives, this Court has recognized, are to provide the public with clear notice of a patent's boundaries and to facilitate judicial determinations of patentability. Both purposes are undermined by allowing patent claims whose scope is uncertain.

1. The primary purpose of the Patent Act's requirement that patent claims "particularly point out and distinctly claim" the invention, reflected in a long and unbroken line of this Court's decisions, is to "protec[t] . . . the public" by providing clear notice of the patent's scope and preventing the patentee from exploiting ambiguity to expand his exclusive rights. *Gen. Elec.*, 304 U.S. at 369. The "federal patent laws . . . embod[y] a careful balance between the need to promote innovation and the recognition that imitation and refinement through imitation are both necessary to invention itself and the very lifeblood of

a competitive economy." *Bonito Boats, Inc.* v. *Thunder Craft Boats, Inc.*, 489 U.S. 141, 146 (1989). The statute grants patentees a temporary monopoly on their inventions, as an inducement to pursue innovation and to share their discoveries with the public. *See Mayo Collaborative Servs., Inc.* v. *Prometheus Labs., Inc.*, 132 S. Ct. 1289, 1305 (2012). But "[p]atent protection is . . . a two-edged sword," and poses risks and costs that can impede others' innovation. *Ibid.* As this Court has made clear, the patent system does not seek to discourage others from building on or designing around the patented invention. To the contrary, others "should be *encouraged* to pursue innovations, creations, and new ideas beyond the inventor's exclusive rights." *Festo Corp.* v. *Shoketsu Kinzoku Kogyo Kabushiki Co.*, 535 U.S. 722, 731 (2002) (emphasis added).

For such "encouragement of the inventive genius of others" to occur, "[t]he limits of a patent must be *known*." *Gen. Elec.*, 304 U.S. at 369 (emphasis added). Other inventors must be able to ascertain "which features may be safely used or manufactured without a license and which may not." *Ibid.* (internal quotation marks omitted); *see also Permutit Co.* v. *Graver Corp.*, 284 U.S. 52, 60 (1931). The need for clarity is if anything even greater than in written instruments, like private contracts, that merely define the rights of private parties among themselves; patent claims define the rights of the patentee against the entire public. Providing "clarity" to the public concerning a patent's scope thus "is essential to promote progress, because it enables efficient investment in innovation." *Festo*, 535 U.S. at 730-31. As the PTO has explained, it is of the "utmost importance" to "foster[ing] innovation and competitiveness" that "the boundaries of the inventive subject

matter protected by a patent" be defined "clearly and precisely." *MPEP* § 2173.

Unclear claims, this Court has held, thwart this objective by creating "[a] zone of uncertainty" regarding the patent's boundaries, "which enterprise and experimentation may enter only at the risk of infringement claims." *United Carbon*, 317 U.S. at 236. Uncertainty surrounding a patent's scope "discourage[s] invention only a little less than unequivocal foreclosure of the field," thus undermining the patent system's constitutional objective of fostering innovation. *Ibid.* The risk of liability if a court finds a new product or process to be infringing, as well as the cost of defending infringement allegations in litigation, provides a powerful disincentive to would-be inventors to pursue new innovations that reasonably *might* be deemed to fall within the scope of an ambiguous patent claim.

Federal agencies have come to the same conclusion, and have emphasized the chilling effect that unclear patent claims have on innovation. As the PTO has put it, "patents of ambiguous and vague scope . . . exact a cost on society due to their ambiguity that is not commensurate with the benefit that the public gains from disclosure of the invention." *Ex Parte Miyazaki*, No. 2007-3300, 2008 WL 5105055, at *6 (B.P.A.I. Nov. 19, 2008) (precedential). That cost is imposed because, as the Federal Trade Commission has explained, "[a]llowing multiple potential constructions" of a patent claim "to persist adds a penumbra to a patent's scope, discouraging rivals from entering where, with clearer notice, they could safely operate." Federal Trade Comm'n, *The Evolving IP Marketplace: Aligning Patent Notice and Remedies with Competition* 98 (2011). Commentators

likewise have repeatedly echoed this Court's teaching and these agencies' observations, underscoring the strong deterrent effect that ambiguous claims have on desirable innovation. *See, e.g.*, James Bessen & Michael J. Meurer, *Patent Failure* 47 (2008); Natasha N. Aljalian, *The Role of Patent Scope in Biopharmaceutical Patents*, 11 B.U. J. Sci. & Tech. L. 1, 12-13 (2005); Herbert Hovenkamp, *Patents, Property, and Competition Policy*, 34 J. Corp. L. 1243, 1256 (2009); Kelly Casey Mullally, *Legal (Un)certainty, Legal Process, and Patent Law*, 43 Loy. L.A. L. Rev. 1109, 1140 & n.130 (2010); Harry Surden, *Efficient Uncertainty in Patent Interpretation*, 68 Wash. & Lee L. Rev. 1737, 1743 (2011).

Patentees and patent drafters have long appreciated this chilling effect, and many have sought to exploit the uncertainty inherent in ambiguous patent claims to expand their *de facto* exclusive rights beyond the scope of their own inventions. Indeed, nearly two centuries ago, even before Congress codified the claim requirement, this Court recognized that a patent with unclear boundaries enables a patentee to "practis[e] upon the credulity or the fears of other persons, by pretending that his invention is more than what it really is." *Evans*, 20 U.S. (7 Wheat.) at 434. And since time immemorial, some patentees have striven to "twis[t]" and "tur[n]" claims "like a nose of wax . . . so as to make it include something more than" the inventor's actual contribution to the art. *White*, 119 U.S. at 51.

Not only do patent owners know how to exploit ambiguous patent claims once issued, but they have powerful economic incentives to draft at least some claims whose scope is ambiguous in the first instance. Drafters understand that unclear patent

claims discourage others from seeking better solutions to a problem, knowing that the penumbra that surrounds an ambiguous claim will make it harder for others to design around the claim with confidence. And drafters appreciate that such uncertainty, in turn, can raise the price of defending—and thus of settling—a patent-infringement lawsuit. Shape-shifting patents that can be stretched, due to their imprecision, plausibly to encompass entirely new, different inventions from those discovered by the patentee are thus now in great demand. And the skill of drafting "[b]road, to the point of inherently ambiguous," claims has become "a prized talent." *Enzo Biochem., Inc.* v. *Applera Corp.*, 605 F.3d 1347, 1348 & n.2 (Fed. Cir. 2010) (Plager, J., dissenting from denial of reh'g).

Indeed, patent treatises now admonish drafters deliberately to craft claims that are ambiguous, explaining that "[i]t is the claim drafter's job to have written the claims in the application to . . . cover competitive products which neither the inventor nor the attorney thought of or *could even have imagined* at the time." Robert C. Faber, *Faber on Mechanics of Patent Claim Drafting* 10–4 (6th ed. 2013) (emphasis added). One drafting guide, for instance, contains an entire subsection entitled "Include Ambiguous Claims," which offers drafters more than a dozen "strategies" for "intentionally writ[ing] ambiguous claims." Jeffrey G. Sheldon, *How to Write a Patent Application* § 6.5.19, at 6–114 (2005). And drafters are advised to "[a]void . . . like the plague" claim language that clearly identifies the "'gist of the invention'" or the "'factor'" that makes it "'unique.'" Robert D. Fish, *Strategic Patenting* 7–35 (2007); *see also* David Pressman, *Patent it Yourself* 204 (16th ed. 2012); George F. Wheeler, *Creative Claim Drafting: Claim*

Drafting Strategies, Specification Preparation, and Prosecution Tactics, 3 J. Marshall Rev. Intell. Prop. L. 34, 44-45 (2003).

Protecting the public from such strategies, this Court has long recognized, is the driving purpose of requiring that patent claims "particularly poin[t] out and distinctly clai[m]" the asserted invention. "The claim is required to be specific for the very purpose of protecting the public against extension of the scope of the patent." *Universal Oil Prods. Co.* v. *Globe Oil & Ref. Co.*, 322 U.S. 471, 484-85 (1944); *accord Gen. Elec.*, 304 U.S. at 372 (Patent Act "requires . . . that the inventor set out a definite limitation of his patent" "for the protection of the public"); *White*, 119 U.S. at 52 (patent "claim is a statutory requirement, prescribed for the very purpose of making the patentee define precisely what his invention is" in large part to prevent injustice to the public); *see also Evans*, 20 U.S. (7 Wheat.) at 434. "The public should not be deprived of rights supposed to belong to it, without being clearly told what it is that limits these rights." *Merrill*, 94 U.S. at 573. And "[t]he genius of the inventor, constantly making improvements in existing patents"—which is what "gives to the patent system its greatest value"—"should not be restrained by vague and indefinite" claims. *Ibid.* "[N]othing can be more just and fair, both to the patentee and to the public, than that the former should understand, and correctly describe, just what he has invented, and for what he claims a patent." *Id.* at 573-74.

Safeguarding other inventors from abuse is also a powerful reason to enforce Section 112, ¶ 2's command faithfully. To encourage innovation outside of a patent's boundary and protect the public from exploitation, as Congress intended, a claim must clear-

ly inform skilled artisans of the scope of the single invention covered by the patent—not a range of *multiple* inventions, any or all of which might be off-limits depending on what a court decides many years later. "To sustain claims so indefinite as not to give the notice required by the statute" thus "would be in direct contravention of the public interest which Congress therein recognized and sought to protect." *United Carbon*, 317 U.S. at 233.

2. This Court's cases dating back more than a century make clear that the requirement that claims "particularly" and "distinctly" identify the purported invention also serves a second, independent purpose: enabling courts—as well as the PTO—to determine more readily whether that invention is patentable. *See United Carbon*, 317 U.S. at 236; *Keystone Bridge*, 95 U.S. at 278. Until Congress required that the patent itself "particularly specify and point out" what the inventor "claims as his own invention or discovery," courts were burdened with a "duty of ascertaining the exact invention" based on their own "laborious examination of previous inventions, and a comparison thereof" with the invention asserted in the patent. *Keystone Bridge*, 95 U.S. at 278 (internal quotation marks omitted). The claim requirement "was inserted in the law for the purpose of relieving the courts" of this burden, saving them from "wad[ing] through the history of the art" to determine, "by inference and conjecture," how the product or process described in the patent differed from the prior art before ascertaining whether that product or process merited a patent. *Ibid.* The patentee himself now must identify what he believes to be his contribution to the art, and the task of "examin[ing], scrutiniz[ing]," and "limit[ing]" the claim so that it

"conform[s] to what [the inventor] is entitled to" is assigned to the PTO. *Ibid.*

A patent claim, however, must be "reasonably clear-cut" to achieve this end of "enabl[ing] courts to determine whether novelty and invention are genuine" without undertaking their own cumbersome, antecedent inquiry into what the invention is. *United Carbon*, 317 U.S. at 236. An ambiguous claim, whose scope one skilled in the art could reasonably interpret in multiple different ways, does not "relieve the courts" of this burden (*Keystone Bridge*, 95 U.S. at 278) at all. If the court cannot tell from reading the claim in context which of several possible inventions is asserted, the court is back at square one, and must "wade through the history of the art" and attempt to discern which interpretation of the claim reflects the patentee's actual invention. *Ibid.*

3. This Court's cases make clear that, to ensure that Congress's core objectives in requiring that claims "particularly poin[t] out and distinctly clai[m]" the invention are furthered and not thwarted, the statutory definiteness standard must be given full effect. "The statutory requirement of particularity and distinctness in claims," the Court has held, "is met only when they *clearly* distinguish what is claimed from what went before in the art and *clearly* circumscribe what is foreclosed from future enterprise." *United Carbon*, 317 U.S. at 236 (emphases added). Patent claims, therefore, must define "the exact scope of an invention." *Markman*, 517 U.S. at 373. The claim's boundaries thus must be "clearly" and "precisely" identified in the patent itself, so that it is "known" on the date it is issued what is covered and what is not. *United Carbon*, 317 U.S. at 232; *Gen. Elec.*, 304 U.S. at 369; *see also Festo*, 535 U.S. at

730-31; *Universal Oil*, 322 U.S. at 484-85; *Merrill*, 94 U.S. at 570. And the claim must clearly distinguish the invention from what has come before. *See Gen. Elec.*, 304 U.S. at 373. The patent law and "the principles which govern the exclusive rights conferred by it" thus "leave no excuse for ambiguous" or "vague" patent claims. *Merrill*, 94 U.S. at 573.

A claim whose scope, read in context, can bear two or more reasonable interpretations to one skilled in the relevant art—or that has no discernible meaning—is therefore impermissible. Such a claim does not provide the public with clear notice of "which features may be safely used or manufactured without a license and which may not." *Gen. Elec.*, 304 U.S. at 369 (internal quotation marks omitted). And it fails to identify what about the asserted invention "distinguish[es]" it "from what is old." *Id.* at 373; *see also United Carbon*, 317 U.S. at 232-36. "[I]t may be that" a patentee whose claim is ambiguous has "made the best disclosure possible" given the invention's subject matter. *Gen. Elec.*, 304 U.S. at 372 (internal quotation marks omitted). "But Congress requires, for the protection of the public, that the inventor set out a definite limitation of his patent; that condition must be satisfied before the monopoly is granted." *Ibid.*

That does not mean that claims are invalid merely because some interpretation is necessary to ascertain their single meaning to one skilled in the relevant art. Claims, of course, must be "construed in the light of the specifications." *United States* v. *Adams*, 383 U.S. 39, 48-49 (1966). A claim that appears ambiguous on its face thus may be clear when read in light of the specification. *See, e.g.*, *Merrill*, 94 U.S. at 569-73. But if despite applying appropriate inter-

pretive tools, a skilled artisan still would be faced with multiple reasonable readings of a claim's scope, the claim cannot be said to define "the exact scope of an invention," *Markman*, 517 U.S. at 373, with the clarity and precision that the statute requires. Likewise, terms of degree are not impermissible, *provided that* the patent specification provides sufficient information so that one skilled in the relevant art would necessarily understand what they mean without ambiguity. *See Eibel Process Co.* v. *Minn. & Ontario Paper Co.*, 261 U.S. 45, 65-66 (1923).

Moreover, the Court has made clear, the claim requirement's purposes forbid permitting patentees to cure otherwise fatal ambiguity or vagueness in their claims simply by adverting to the invention's intended *function*. Language in a claim that identifies what the inventor claims as his invention based only on the outcome it accomplishes, without delineating a particular structure by which his invention achieves that outcome, does *not* clearly distinguish the invention from what came before. And it does not put the public on notice of what alternative means of achieving that function are still available. *See United Carbon*, 317 U.S. at 234-36; *Gen. Elec.*, 304 U.S. at 373; *see also Halliburton Oil Well Cementing Co.* v. *Walker*, 329 U.S. 1, 12 (1946), *superseded by* 35 U.S.C. § 112, ¶ 6 (2011). Congress has embraced this important limitation: The Patent Act permits claims to refer to a "means" of achieving a given "function," *but* the claim is then confined under the statute to the *particular* apparatus the patentee has disclosed in the specification. 35 U.S.C. § 112, ¶ 6 ("such claim shall be construed to cover the corresponding structure, material, or acts described in the specification and equivalents thereof").

*****

Congress's purposes and this Court's precedent erase any doubt that Section 112, ¶ 2, means just what it says. A claim "particularly point[s] out and distinctly claim[s]" the invention only if it clearly and precisely defines the invention's boundary lines in a way that a reader skilled in the relevant art would understand. If the claim is instead ambiguous, such that readers could reasonably interpret the claim's scope differently, it is invalid.

C. There Is No Valid Justification For The Federal Circuit's Departure From The Statutory Definiteness Standard.

The court below rejects the straightforward standard compelled by Section 112's text and reinforced by this Court's precedent distilling Congress's intentions. According to the decision below, "[a] claim is indefinite only when it is not 'amenable to construction,'" or when the claim once "'*construed*'" is not "'insolubly ambiguous.'" Pet. App. 13a (emphasis added) (citation omitted); *see also ibid.* (claim is "'insolubly ambiguous'" only "if reasonable efforts at claim construction result in a definition that does not provide sufficient particularity and clarity to inform skilled artisans of the bounds of the claim," that is, if the "'*construction* remains insolubly ambiguous'" (emphasis added) (citation omitted)). The court of appeals expressly allows such claims "'*even though*'" "'the meaning of the claim'" is a question "'over which *reasonable persons will disagree.*'" *Id.* at 22a (emphases added) (quoting *Exxon Research & Eng'g Co.* v. *United States*, 265 F.3d 1371, 1375 (Fed. Cir. 2001)). As the PTO has summarized it, under Federal Circuit precedent, "the validity of a claim will be preserved if some meaning can be gleaned from the

language." *MPEP* § 2173.02(I); *see also Hearing Components, Inc.* v. *Shure Inc.*, 600 F.3d 1357, 1366 (Fed. Cir. 2010) (claim is definite so long as it "can be given any reasonable meaning").

That standard is at war with the Patent Act's text, and it is antithetical to Congress's purposes and decades of this Court's case law. A rule that claims need only be *capable* of being construed does not come close to mandating the clarity and precision that Section 112, ¶ 2's language commands. The "amenable to construction" requirement rules out only inkblots; ambiguous claims that can bear more than one reasonable reading necessarily pass muster. And a test that upholds claims so long as a construction adopted years later by a court is not "insolubly ambiguous" fails to require clear public notice of the claim's scope when the patent is issued. Indeed, as this case illustrates, "it is not until three court of appeals judges randomly selected for that purpose pick the 'right' interpretation that the public, not to mention the patentee and its competitors, know what the patent actually claims." *Enzo*, 605 F.3d at 1348 (Plager, J., dissenting from denial of reh'g); *see, e.g.*, *Praxair, Inc.* v. *ATMI, Inc.*, 543 F.3d 1306, 1323-24 (Fed. Cir. 2008) (court "need not accept the constructions proposed by either party," and concluding that the district court's construction "is also not correct").

The "insolubly ambiguous" test thus deprives the public of fair notice of claims' boundaries and exposes consumers and would-be innovators alike to exploitation by patentees. Indeed, users of products and processes potentially subject to a patent who wish to secure a definitive determination of the patent's valid scope (if it has any) often must devote considerable time and resources and potentially incur significant

risk. The "insolubly ambiguous" test, moreover, reinforces drafters' already powerful incentives to draft at least some claims that are unclear in the first place, in the hope of capturing the "zone of uncertainty" that ambiguity creates, *United Carbon*, 317 U.S. at 236—in turn chilling the innovation that the patent laws exist to encourage.

The decision below, in fact, did not pretend that the "insolubly ambiguous" test has any footing in the text of Section 112, ¶ 2. Nor has the court of appeals suggested that its standard can be reconciled with the statutory mandate's ends of providing clear public notice of claims' scope and enabling efficient judicial determinations of patentability. Instead, the court of appeals has justified its approach based on several other considerations—none of which remotely supports such distortion of the statutory standard.

1. The primary asserted justification for the diluted definiteness standard applied below is that it "accord[s] respect to the statutory presumption of patent validity," first applied at common law and now codified in 35 U.S.C. § 282. Pet. App. 22a. That presumption, however, does not at all support permitting ambiguous claims which lack the clarity and precision that Section 112, ¶ 2, requires.

Section 282, ¶ 1, establishes that "[a] patent," and each claim within it, "shall be presumed valid." 35 U.S.C. § 282, ¶ 1. The statute also makes clear, however, that "failure to comply with . . . any requirement of section 112" "shall be [a] defense," which must "be pleaded." *Id.* § 282, ¶ 2(3)(A). "The burden of establishing invalidity of a patent or any claim thereof" thus "rest[s] on the party asserting such invalidity." *Id.* § 282, ¶ 1.

But nothing in Section 282 alters the legal "requirement[s]" of Section 112, ¶ 2. As this Court has held, Section 282's presumption of validity requires that factual elements of invalidity defenses must "be proved by clear and convincing evidence." *Microsoft Corp.* v. *i4i Ltd. P'ship*, 131 S. Ct. 2238, 2242 (2011). Although the statute "includes no express articulation of the standard of proof," *id.* at 2245, "by the time Congress enacted § 282" in 1952, "the presumption of patent validity had long been a fixture of the common law" and had acquired a "settled meaning": "[A] defendant raising an invalidity defense" must present "proof of the defense by clear and convincing evidence," not merely by a "'dubious preponderance'" of proof. *Id.* at 2246-47 (quoting *Radio Corp. of Am.* v. *Radio Eng'g Labs., Inc.*, 293 U.S. 1, 8 (1934)). Applying the "general rule that a common-law term comes with its common-law meaning" absent a contrary indication in the statute, the Court construed Section 282 to retain that common-law meaning of the presumption of validity and as codifying the clear-and-convincing-evidence test. *Id.* at 2246.

This "heightened standard of *proof*" (*i4i*, 131 S. Ct. at 2246 (emphasis added)), however, has no bearing on the "requirement[s]" of clarity and precision that Section 112, ¶ 2, demands of patent claims. Section 282 does not purport to alter the legal standard that Section 112 establishes, or otherwise affect whether a patent claim satisfies that standard. To the contrary, Section 282 *incorporates* Section 112's "requirement[s]."

Whether a patent claim satisfies Section 112's requirements that it "particularly poin[t] out and distinctly clai[m]" the patentee's invention is a *legal* inquiry as to which Section 282's evidentiary stand-

ard is irrelevant. As lower courts have long held in other contexts, "there cannot appropriately be any evidentiary or factual burden with respect to" a "question of law." *United States* v. *Watson*, 623 F.2d 1198, 1202 (7th Cir. 1980). "A question of law is by definition susceptible of only two answers: 'yes,' the requirements of legal principle are met or 'no,' they are not met." *Ibid.* "A standard of proof, whether beyond a reasonable doubt or some other, simply has no application to" a "legal question," such as "whether a given statement is material." *United States* v. *Hausmann*, 711 F.2d 615, 617 (5th Cir. 1983) (per curiam); *see also United States* v. *Martinez*, 855 F.2d 621, 623 (9th Cir. 1988); *United States* v. *Farnham*, 791 F.2d 331, 334 (4th Cir. 1986); *United States* v. *Larranaga*, 787 F.2d 489, 496 (10th Cir. 1986); *United States* v. *Armilio*, 705 F.2d 939, 941 (8th Cir. 1983); *United States* v. *Berardi*, 629 F.2d 723, 727 (2d Cir. 1980); *United States* v. *Giacalone*, 587 F.2d 5, 7 (6th Cir. 1978).

Thus, as several Members of this Court have recognized, Section 282's "strict standard of proof has no application" in cases "where the question of patent validity turns on the correct answer to *legal* questions." *i4i*, 131 S. Ct. at 2253 (Breyer, J., joined by Scalia and Alito, JJ., concurring) (emphasis added). That is undoubtedly true of questions of validity, such as indefiniteness, that turn on whether the "patent applicant described his claims properly" as required by Section 112. *Ibid.*; *cf. Gen. Elec.*, 304 U.S. at 368 (holding claim "invalid on its face" for indefiniteness). Even the decision below acknowledged that "[i]ndefiniteness is a legal issue." Pet. App. 12a.

Indeed, unlike some other invalidity defenses, indefiniteness presents not merely a question of "how

the law applies to *facts* as given," *i4i*, 131 S. Ct. at 2253 (Breyer, J., concurring) (emphasis added), but a question of how the law applies in light of the antecedent *legal* determination of how a patent claim is properly interpreted. Whatever degree of clarity Section 112, ¶ 2, requires of patent claims, whether that standard is satisfied depends on what the claim *means*. As this Court has long held, the "interpretation of" patent claims is itself "a matter of law," which lies "exclusively within the province of the court." *Markman*, 517 U.S. at 372; *see id.* at 376-91; *see also, e.g.*, *Winans* v. *Denmead*, 56 U.S. (15 How.) 330, 338 (1854) ("construing the letters-patent, and the description of the invention and specification of claim annexed to them," "is a question of law, to be determined by the court"). Evidentiary thresholds appropriate for *factual* inquiries are thus utterly irrelevant in determining whether the text of a claim read in context—the interpretation of which is a legal issue to be decided by the court—points out an invention with the distinctness and particularity that Section 112 requires.

Nor should courts be reluctant to enforce Section 112's clear mandate out of deference to the PTO's determination that a patent is valid. Just as courts are perfectly capable of determining for themselves what clear patent claims mean, so too they are entirely able to discern independently whether a claim is sufficiently clear. This Court, indeed, has frequently resolved indefiniteness questions itself—sometimes in the first instance—and has applied the stringent statutory requirement of definiteness established in the statute, not a watered-down version diluted to accommodate the (then common-law) presumption of validity or out of deference to the agency's determination of validity. *See, e.g.*, *Gen. Elec.*, 304 U.S. at

369; *see also United Carbon*, 317 U.S. at 232; *Universal Oil*, 322 U.S. at 484.[8]

Properly understood, the now-codified presumption of validity thus has nothing to do with the degree of clarity that Section 112, ¶ 2, demands. As to issues of indefiniteness, Section 282 means simply that a court adjudicating a dispute involving a patent begins with the assumption that the patent is valid, and maintains that assumption unless and until the patent's validity is properly challenged. The party challenging the patent as indefinite must plead and prove that defense. *See* 35 U.S.C. § 282, ¶ 2(3)(A). But once the patent's compliance with Section 112 is put in issue, the court must decide that legal issue impartially—not with one thumb on the scales on the side of the private party who has secured a publicly granted monopoly.

2. The court of appeals also asserted that the lax "insolubly ambiguous" standard is appropriate to "'protect the inventive contribution of patentees'" whose "'drafting of their patents has been less than ideal.'" Pet. App. 22a (quoting *Exxon*, 265 F.3d at 1375). The ease or difficulty of satisfying the statutory requirement, however, is no basis for blue-penciling Section 112, ¶ 2, to permit ambiguous

---

[8] Even if determinations regarding indefiniteness in some cases depended on any factual predicates on which deference to the PTO's findings might be appropriate, such deference is irrelevant in this case. Neither the Federal Circuit majority nor the concurrence purported to defer to any factual findings made by the agency. The Court thus has no occasion to decide here whether and in what circumstances deference to the PTO's subsidiary factual determinations is appropriate in adjudicating indefiniteness challenges.

claims in defiance of its text, Congress's purposes, and this Court's teaching. In any event, patent drafters are perfectly capable of satisfying the statutory standard of clarity.

It is the inventor himself, after all, who knows his invention best and is best positioned to avoid ambiguities. And drafters already have many well-recognized tools at their disposal to craft claims that particularly and distinctly delineate the invention. For example, inventors can include in the patent specification express definitions of the most important claim terms; positive and negative concrete examples of designs that fall inside and outside the claimed invention; and descriptions of and clear distinctions over the closest known prior art. *See* Surden, *supra*, at 1816-20; *see, e.g.*, *Eibel*, 261 U.S. at 55-58. And they may include language describing an invention's function, provided that it is tethered to a specific, concrete structure. 35 U.S.C. § 112, ¶ 6. Indeed, by statute, patentees are *required* to describe the invention in "full, clear, concise, and exact terms." *Id.* § 112, ¶ 1. If inventors do not manage to make their claims clear, it is not for a lack of tools, but for a lack of trying.

Even if inventors have difficulty utilizing these tools in initially drafting particular and distinct claims, they still are not left out in the cold. An inventor "has an opportunity . . . to amend ambiguous claims to clearly and precisely define the metes and bounds of the claimed invention," while the application is pending before the agency. *MPEP* § 2173.02. Inventors, moreover, can submit more than one claim in the same patent, 35 U.S.C. § 112, ¶ 2, giving them multiple opportunities to mark the boundaries of their invention with sufficient clarity.

Any doubt that holding patent drafters to the statutory standard will not impose an onerous, unbearable burden is erased by the fact that the PTO, which decides whether to issue a patent in the first instance, *already* applies the statutory standard. Unlike the Federal Circuit, the PTO currently rejects claims as indefinite under Section 112, ¶ 2, if "a person of ordinary skill in the relevant art would read" the claim "with more than one reasonable interpretation." *MPEP* § 2173.02(I); *see also Miyazaki*, 2008 WL 5105055, at *10 (rejecting claims as indefinite because, when read in light of the specification, they were "amenable to two or more plausible claim constructions"). Inventors—who already are required to draft unambiguous claims that are not subject to multiple reasonable readings to secure a patent from the PTO—would have no basis to complain if courts tested claims by the same standard.

Nor does complying with the statutory standard of definiteness require inventors to draft claims so narrowly as to invite evasion by clever infringers. As the PTO recognizes, claims can be broad yet not indefinite, so long as the boundaries of what they encompass are not ambiguous. *See MPEP* § 2173.02(I) ("A broad claim is not indefinite merely because it encompasses a wide scope of subject matter provided the scope is clearly defined."). Moreover, where suboptimal claim draftsmanship would otherwise enable others who make or use the patentee's invention to avoid "literally infring[ing] upon the express terms of a patent claim" by making "insubstantial" alterations to the process or product, the "doctrine of equivalents" ensures that the infringer will not escape liability. *Warner-Jenkinson Co.* v. *Hilton Davis Chem. Co.*, 520 U.S. 17, 21, 24 (1997).

3. The court of appeals has previously justified the "insolubly ambiguous" standard based on the fear that "cases frequently present close questions of claim construction," and "[u]nder a broad concept of indefiniteness, all but the clearest claim construction issues could be regarded as giving rise to invalidating indefiniteness in the claims at issue." *Exxon*, 265 F.3d at 1375. That fear is unfounded. Many claim-construction disputes do not involve real disagreement over a claim's *scope*, but only over the manner in which the words of the claim should be described in laypersons' terms for the jury. Differences of opinion over how to translate a claim for lay jurors have no bearing on whether the boundaries of the claim itself are definite to a skilled artisan.

Many disputes that do bear on claims' scope, moreover, arise precisely because parties tender *unreasonable* interpretations of the claims. But such disputes do not render a claim indefinite. Section 112, ¶ 2, does not render a claim invalid merely because more than one interpretation is theoretically *conceivable*. As a general matter, this Court has explained, "the certainty which the law requires in patents is not greater than is *reasonable*, having regard to their subject-matter." *Minerals Separation, Ltd.* v. *Hyde*, 242 U.S. 261, 270 (1916) (emphasis added). Only genuinely ambiguous claims that are susceptible of more than one *reasonable* interpretation when read in light of the specification are forbidden by the statute. One skilled in the art can have "reasonable" "certainty" of a claim's meaning even if outlandish, implausible readings of the claim's text can be posited by counsel zealously advocating their clients' interests. But to be reasonably certain of the claim's correct interpretation, the skilled artisan must be

able to conclude that no other reasonable readings exist.

In any event, the court of appeals' concern that the frequency of claim-construction disputes justifies relaxing the statutory standard has matters backwards. That court's tolerance of ambiguous claims is a primary reason why such unclear claims and disputes over their meaning persist. The "insolubly ambiguous" standard gives patent drafters little incentive to craft their claims clearly in the first instance. And that flawed standard leaves patentees free to take changing, even inconsistent positions regarding a claim's meaning—in litigation, licensing negotiations, etc.—with little fear that doing so will render the claim invalid by revealing a latent ambiguity. The prevalence of disputes over claim interpretation is not a reason to water down the statute. It is part of the problem that Section 112, ¶ 2, exists to solve.

II. RESPONDENT'S CLAIMS ARE INDEFINITE UNDER THE CORRECT STATUTORY STANDARD.

The court of appeals' entrenched rejection of the particular-and-distinct-claiming standard required by Section 112, ¶ 2's text, purposes, and this Court's precedent is erroneous and at a minimum requires vacatur. But both the circumstances of this case—both the district court and court of appeals decided the indefiniteness issue as a matter of law—and the lower courts' need for guidance fully justify this Court's application of the correct standard here to reverse the judgment below.

A. There can be no serious dispute here that the relevant claims in the Lekhtman Patent, susceptible as they are to more than one reasonable interpreta-

tion, are ambiguous and therefore indefinite. Despite appearing to apply the same legal principles of claim interpretation, the Federal Circuit majority and concurrence adopted very different readings of key claim language and thus different understandings of the claims' scope. The majority concluded that the configuration of electrodes claimed by the patent—including the "spaced relationship" between them—is dictated by the invention's intended *function* of removing interference from muscle signals. Pet. App. 16a-21a. On that view, the claim covers only devices with special electrode configurations—determined by trial and error—that cancel out the muscle signals in each hand, enabling measurement of heart signals alone. *Id.* at 17a-18a. The concurrence, in contrast, concluded that there is no "functional linkage" between the invention's goal of eliminating muscle signals and the configuration of the electrodes. *Id.* at 31a-32a (Schall, J., concurring). Beyond certain broad, "inherent parameters" present in the patented design (and in the prior art)—*i.e.*, the electrodes on each side cannot touch each other, yet must be close enough for a person's hand to touch both simultaneously—the "spaced relationship" described by the claim means *any* "fixed spatial relationship between" the electrodes. *Id.* at 31a; *cf. id.* at 16a (majority opinion).

Those two readings of the claim differ starkly, and the difference between them bears directly on the scope of the patent. Consider, for example, a skilled artisan in 1994 who wished to use the exact configuration and spacing of electrodes depicted in the closest prior art (the Fujisaki Patent), but desired to innovate some different means other than the electrodes' spacing—such as additional circuitry—to equalize the muscle signals. Under the major-

ity's reading of the claims, that new device would be permissible. Under the concurrence's reading, however, it could infringe the Lekhtman Patent. Until a majority of a randomly selected panel of the Federal Circuit interpreted the claims, 19 years after the patent issued, a skilled artisan could not say with any confidence which view was correct. In the meantime, the ambiguity allowed the patent owner to adopt shifting, inconsistent positions regarding the claims' scope to suit the tactical needs of the moment—sometimes urging a broad, non-functional view of "spaced relationship," while at other times urging a narrower, functional view.

Regardless whether the majority or concurrence's reading (if either) is ultimately more sound, there is no serious dispute that both interpretations are at least reasonable. Neither the majority nor the concurrence, in fact, even suggested, much less demonstrated, that the other opinion's reading was *not* reasonable. Moreover, while both the majority and concurrence disagreed to some extent with the district court's final interpretation, neither one opined that *that* interpretation was unreasonable either. Pet. App. 15a-25a; *id.* at 29a-32a (Schall, J., concurring); *cf.* Pet. App. 44a (district court's construction).

Respondent's claims thus fall far short of Section 112, ¶ 2's standard, and well illustrate the type of ambiguities that the statute prohibits but the "insolubly ambiguous" standard allows. Because the claims here, read in light of the specification, reasonably could refer at least either to a heart-rate monitor with a special electrode configuration defined by its function, or to a whole category of heart-rate monitors whose electrodes merely need to fit someone's hands, they necessarily do not point out and claim

the invention "clearly," "plainly," "singly," and "not confused[ly]." *See* Webster's 1872, at 217, 522. Neither the public, in determining which types of heart-rate monitors are covered by the patent and which are not, nor a court adjudicating whether respondent's claimed invention is novel, non-obvious, and useful, can tell from reading the claim in context what it encompasses.

B. Respondent's claims closely resemble those that this Court has previously invalidated. In *General Electric*, for example, the Court held invalid for indefiniteness a claim for a tungsten light-bulb filament "made up mainly of a number of *comparatively* large grains of such size and contour as to prevent substantial sagging and offsetting during a normal or commercially useful life," because the claim's meaning was not clear to one skilled in the art. 304 U.S. at 368 (emphasis added); *see id.* at 369-74. The claim failed to disclose even to a skilled artisan "the structural characteristics" of the tungsten grains. *Id.* at 370. "[T]he specification" did "not attempt in any way to describe the filament, except by mention of its coarse-grained quality," or explain how it differed from the prior art. *Id.* at 373. The only clue the patent provided as to what was covered was its intended function of "prevent[ing] substantial sagging and offsetting." *Id.* at 370. But, as the Court explained, the patentee could not cure the claim's indeterminacy simply by pointing to a function his invention performs—especially when that function was asserted to distinguish the invention from the prior art. *See id.* at 371-72 ("a characteristic essential to novelty may not be distinguished from the old art solely by its tendency to remedy the problems in the art met by the patent").

Similarly, in *United Carbon*, the Court rejected a claim for "'sustantially [sic] pure carbon black in the form of commercially uniform, comparatively small, rounded, smooth aggregates having a spongy or porous interior.'" 317 U.S. at 231; *see id.* at 233-37. The claim was "bad for indefiniteness," the Court held, because its terms describing the product's dimensions and other structural attributes could bear a range of meanings to one skilled in the art. *See id.* at 233-34, 237. "Whether the vagueness of the claim has its source in the language employed or in the somewhat indeterminate character of the advance claimed to have been made in the art," the Court explained, "is not material. An invention must be capable of accurate definition, and it must be accurately defined, to be patentable." *Id.* at 237. As in *General Electric*, the patent's only hints as to what the ambiguous terms in the claim meant were "inaccurate suggestions of the functions of the product," which were insufficient to define the invention particularly and distinctly. *Id.* at 234.

General Electric, 304 U.S. 364, and *United Carbon*, 317 U.S. 228, provide helpful guideposts that illustrate the correct analysis and highlight the indefiniteness of respondent's claims. Here, as in both *General Electric* and *United Carbon*, the claims' language, even in light of the specification, points in multiple directions, leaving the reader unable to discern with reasonable certainty the metes and bounds of what the inventor "regards as his invention." 35 U.S.C. § 112, ¶ 2. The claims might sweep as broadly as the Federal Circuit concurrence or the district court ultimately concluded, or they might refer more narrowly, as the majority (and, tentatively, the district court) held, to a device in which a particular electrode configuration is critical to the functional

outcome. That is dispositive of the claims' invalidity. Indeed, here the ambiguity is particularly problematic because it concerns the very attribute of the invention—its function—that the inventor regarded as his invention and later asserted made it novel.

As in *General Electric* and *United Carbon*, it may be true here that Lekhtman intended to claim only a device that accomplished the function of removing muscle signals. But as those cases teach, that possibility is irrelevant to indefiniteness, because an otherwise-fatal ambiguity as to what an invention *is* cannot be cured by the reader's understanding of what it *does*. It likewise makes no difference to indefiniteness whether a reader skilled in the art, if *instructed* to ascertain the "spaced relationship" necessary to achieve the function of canceling out muscle signals, could readily do so, despite the absence in the specification of any concrete description or illustration of the necessary spacing. Here it is uncertain from the claims, as the majority and concurring opinions show, *whether or not* that function dictates the meaning of "spaced relationship" and thus prescribes the scope of the claims. A claim that does not answer that basic question does not particularly point out and distinctly claim the invention as Section 112, ¶ 2, requires.

CONCLUSION

Congress and this Court have made clear that patent claims must "particularly poin[t] out and distinctly clai[m]" the purported invention. And the statutory language and this Court's case law distilling Congress's core objectives leave no doubt that ambiguous claims fall short of this standard. The "insolubly ambiguous" standard that the court of appeals applies, and which led inexorably to its conclu-

sion in this case, cannot be reconciled with Section 112, ¶ 2's plain language, its purpose, or controlling precedent. This Court should reject the court of appeals' departure from the statute's requirements, reaffirm the standard of particularity and distinctness established long ago, and demonstrate the correct application of that standard by holding respondent's claims indefinite and invalid.

The judgment of the court of appeals should be reversed.

Respectfully submitted.

THOMAS G. HUNGAR
MATTHEW D. MCGILL
JONATHAN C. BOND
GIBSON, DUNN & CRUTCHER LLP
1050 Connecticut Avenue, N.W.
Washington, D.C. 20036
(202) 955-8500

JAMES E. GERINGER
JEFFREY S. LOVE
JOHN D. VANDENBERG
Counsel of Record
PHILIP WARRICK
KLARQUIST SPARKMAN, LLP
One World Trade Center
Suite 1600
121 S.W. Salmon Street
Portland, OR 97204
(503) 595-5300
john.vandenberg@klarquist.com

Counsel for Petitioner Nautilus, Inc.

February 24, 2014

APPENDIX

The Constitution of the United States, article I, section 8, clause 8, provides:

Section 8.

The Congress shall have Power . . .

. . .

To promote the Progress of Science and useful Arts, by securing for limited Times to Authors and Inventors the exclusive Right to their respective Writings and Discoveries;

. . .

Section 2 of the Act of Apr. 10, 1790, ch. 7, 1 Stat. 109, 110, provided:

SEC. 2. *And be it further enacted*, That the grantee or grantees of each patent shall, at the time of granting the same, deliver to the Secretary of State a specification in writing, containing a description, accompanied with drafts or models, and explanations and models (if the nature of the invention or discovery will admit of a model) of the thing or things, by him or them invented or discovered, and described as aforesaid, in the said patents; which specification shall be so particular, and said models so exact, as not only to distinguish the invention or discovery from other things before known and used, but also to enable a workman or other person skilled in the art or manufacture, whereof it is a branch, or wherewith it may be nearest connected, to make, construct, or use the same, to the end that the public may have the full benefit thereof, after the expiration of the patent term; which specification shall be filed in the office of the said Secretary, and certified copies thereof,

shall be competent evidence in all courts and before all jurisdictions, where any matter or thing, touching or concerning such patent, right, or privilege, shall come in question.

Section 3 of the Act of Feb. 21, 1793, ch. 11, 1 Stat. 318, 321, provided:

SEC. 3. *And be it further enacted*, That every inventor, before he can receive a patent, shall swear or affirm, that he does verily believe, that he is the true inventor or discoverer of the art, machine, or improvement, for which he solicits a patent, which oath or affirmation may be made before any person authorized to administer oaths, and shall deliver a written description of his invention, and of the manner of using, or process of compounding the same, in such full, clear and exact terms, as to distinguish the same from all other things before known, and to enable any person skilled in the art or science, of which it is a branch, or with which it is most nearly connected, to make, compound, and use the same. And in the case of any machine, he shall fully explain the principle, and the several modes in which he has contemplated the application of that principle or character, by which it may be distinguished from other inventions; and he shall accompany the whole with drawings and written references, where the nature of the case admits of drawings, or with specimens of the ingredients, and of the composition of matter, sufficient in quantity for the purpose of experiment, where the invention is of a composition of matter; which description, signed by himself and attested by two witnesses, shall be filed in the office of the Secretary of State, and certified copies thereof

shall be competent evidence, in all courts, where any matter or thing, touching such patent-right, shall come in question. And such inventor shall, moreover, deliver a model of his machine, provided, the secretary shall deem such model to be necessary.

Section 6 of the Act of July 4, 1836, ch. 357, 5 Stat. 117, 119, provided:

SEC. 6. *And be it further enacted*, That any person or persons having discovered or invented any new and useful art, machine, manufacture, or composition of matter, or any new and useful improvement on any art, machine, manufacture, or composition of matter, not known or used by others before his or their discovery or invention thereof, and not, at the time of his application for a patent, in public use or on sale, with his consent or allowance, as the inventor or discoverer; and shall desire to obtain an exclusive property therein may make application in writing to the Commissioner of Patents, expressing such desire, and the Commissioner, on due proceedings had, may grant a patent therefor. But before any inventor shall receive a patent for any such new invention or discovery, he shall deliver a written description of his invention or discovery, and of the manner and process of making, constructing, using, and compounding the same, in such full, clear, and exact terms, avoiding unnecessary prolixity, as to enable any person skilled in the art or science to which it appertains, or with which it is most nearly connected, to make, construct, compound, and use the same; and in case of any machine, he shall fully explain the principle and the several modes in which he has contemplated the application of that principle

or character by which it may be distinguished from other inventions; and shall particularly specify and point out the part, improvement, or combination, which he claims as his own invention or discovery. He shall, furthermore, accompany the whole: with a drawing, or drawings, and written references, where the nature of the case admits of drawings, or with specimens of ingredients, and of the composition of matter, sufficient in quantity for the purpose of experiment, where the invention or discovery is of a composition of matter; which descriptions and drawings, signed by the inventor and attested by two witnesses, shall be filed in the Patent Office; and he shall moreover furnish a model of his invention, in all cases which admit of a representation by model, of a convenient size to exhibit advantageously its several parts. The applicant shall also make oath or affirmation that he does verily believe that he is the original and first inventor or discoverer of the art, machine, composition, or improvement, for which he solicits a patent, and that he does not know or believe that the same was ever before known or used; and also of what country he is a citizen; which oath or affirmation may be made before any person authorized by law to administer oaths.

Section 26 of the Act of July 8, 1870, ch. 230, 16 Stat. 198, 201, provided:

SEC. 26. *And be it further enacted*, That before any inventor or discoverer shall receive a patent for his invention or discovery, he shall make application therefor, in writing, to the commissioner, and shall file in the patent office a written description of the same, and of the manner and process of making, con-

structing, compounding and using it, in such full, clear, concise, and exact terms as to enable any person skilled in the art or science to which it appertains, or with which it is most nearly connected, to make, construct, compound and use the-same; and in case of a machine, he shall explain the principle thereof, and the best mode in which he has contemplated applying that principle so as to distinguish it from other inventions; and he shall particularly point out and distinctly claim the part, improvement, or combination which he claims as his invention or discovery; and said specification and claim shall be signed by the inventor and attested by two witnesses.

Section 112 of Pub. L. No. 82-593, § 112, 66 Stat. 792, 798 (1952), provided:

§ 112. Specification

[¶ 1] The specification shall contain a written description of the invention, and of the manner and process of making and using it, in such full, clear, concise, and exact terms as to enable any person skilled in the art to which it pertains, or with which it is most nearly connected, to make and use the same, and shall set forth the best mode contemplated by the inventor of carrying out his invention.

[¶ 2] The specification shall conclude with one or more claims particularly pointing out and distinctly claiming the subject matter which the applicant regards as his invention.

[¶ 3] An element in a claim for a combination may be expressed as a means or step for performing a specified function without the recital of structure,

material, or acts in support thereof, and such claim shall be construed to cover the corresponding structure, material, or acts described in the specification and equivalents thereof.

Section 111(a) of Title 35, United States Code (2011), provided:

§ 111. Application

(a) IN GENERAL.—

(1) WRITTEN APPLICATION.—An application for patent shall be made, or authorized to be made, by the inventor, except as otherwise provided in this title, in writing to the Director.

(2) CONTENTS.—Such application shall include—

(A) a specification as prescribed by section 112 of this title;

(B) a drawing as prescribed by section 113 of this title; and

(C) an oath by the applicant as prescribed by section 115 of this title.

(3) FEE AND OATH.—The application must be accompanied by the fee required by law. The fee and oath may be submitted after the specification and any required drawing are submitted, within such period and under such conditions, including the payment of a surcharge, as may be prescribed by the Director.

(4) FAILURE TO SUBMIT.—Upon failure to submit the fee and oath within such prescribed period, the application shall be regarded as

abandoned, unless it is shown to the satisfaction of the Director that the delay in submitting the fee and oath was unavoidable or unintentional. The filing date of an application shall be the date on which the specification and any required drawing are received in the Patent and Trademark Office.

Section 112 of Title 35, United States Code (2011), provided:

§ 112. Specification

[¶ 1] The specification shall contain a written description of the invention, and of the manner and process of making and using it, in such full, clear, concise, and exact terms as to enable any person skilled in the art to which it pertains, or with which it is most nearly connected, to make and use the same, and shall set forth the best mode contemplated by the inventor of carrying out his invention.

[¶ 2] The specification shall conclude with one or more claims particularly pointing out and distinctly claiming the subject matter which the applicant regards as his invention.

[¶ 3] A claim may be written in independent or, if the nature of the case admits, in dependent or multiple dependent form.

[¶ 4] Subject to the following paragraph, a claim in dependent form shall contain a reference to a claim previously set forth and then specify a further limitation of the subject matter claimed. A claim in dependent form shall be construed to incorporate by

reference all the limitations of the claim to which it refers.

[¶ 5] A claim in multiple dependent form shall contain a reference, in the alternative only, to more than one claim previously set forth and then specify a further limitation of the subject matter claimed. A multiple dependent claim shall not serve as a basis for any other multiple dependent claim. A multiple dependent claim shall be construed to incorporate by reference all the limitations of the particular claim in relation to which it is being considered.

[¶ 6] An element in a claim for a combination may be expressed as a means or step for performing a specified function without the recital of structure, material, or acts in support thereof, and such claim shall be construed to cover the corresponding structure, material, or acts described in the specification and equivalents thereof.

Section 161 of Title 35, United States Code (2011), provided:

§ 161. Patents for plants

[¶ 1] Whoever invents or discovers and asexually reproduces any distinct and new variety of plant, including cultivated sports, mutants, hybrids, and newly found seedlings, other than a tuber propagated plant or a plant found in an uncultivated state, may obtain a patent therefor, subject to the conditions and requirements of this title.

[¶ 2] The provisions of this title relating to patents for inventions shall apply to patents for plants, except as otherwise provided.

Section 162 of Title 35, United States Code (2011), provided:

§ 162. Description, claim

[¶ 1] No plant patent shall be declared invalid for noncompliance with section 112 of this title if the description is as complete as is reasonably possible.

[¶ 2] The claim in the specification shall be in formal terms to the plant shown and described.

Section 251 of Title 35, United States Code (2011), provided:

§ 251. Reissue of defective patents

[¶ 1] Whenever any patent is, through error without any deceptive intention, deemed wholly or partly inoperative or invalid, by reason of a defective specification or drawing, or by reason of the patentee claiming more or less than he had a right to claim in the patent, the Director shall, on the surrender of such patent and the payment of the fee required by law, reissue the patent for the invention disclosed in the original patent, and in accordance with a new and amended application, for the unexpired part of the term of the original patent. No new matter shall be introduced into the application for reissue.

[¶ 2] The Director may issue several reissued patents for distinct and separate parts of the thing patented, upon demand of the applicant, and upon payment of the required fee for a reissue for each of such reissued patents.

[¶ 3] The provisions of this title relating to applications for patent shall be applicable to

applications for reissue of a patent, except that application for reissue may be made and sworn to by the assignee of the entire interest if the application does not seek to enlarge the scope of the claims of the original patent.

[¶ 4] No reissued patent shall be granted enlarging the scope of the claims of the original patent unless applied for within two years from the grant of the original patent.

Section 282 of Title 35, United States Code (2011), provided:

§ 282. Presumption of validity; defenses

[¶ 1] A patent shall be presumed valid. Each claim of a patent (whether in independent, dependent, or multiple dependent form) shall be presumed valid independently of the validity of other claims; dependent or multiple dependent claims shall be presumed valid even though dependent upon an invalid claim. Notwithstanding the preceding sentence, if a claim to a composition of matter is held invalid and that claim was the basis of a determination of nonobviousness under section 103(b)(1), the process shall no longer be considered nonobvious solely on the basis of section 103(b)(1). The burden of establishing invalidity of a patent or any claim thereof shall rest on the party asserting such invalidity.

[¶ 2] The following shall be defenses in any action involving the validity or infringement of a patent and shall be pleaded:

(1) Noninfringement, absence of liability for infringement or unenforceability,

(2) Invalidity of the patent or any claim in suit on any ground specified in part II of this title as a condition for patentability,

(3) Invalidity of the patent or any claim in suit for failure to comply with—

(A) any requirement of section 112, except that the failure to disclose the best mode shall not be a basis on which any claim of a patent may be canceled or held invalid or otherwise unenforceable; or

(B) any requirement of section 251.

(4) Any other fact or act made a defense by this title.

[¶ 3] In actions involving the validity or infringement of a patent the party asserting invalidity or noninfringement shall give notice in the pleadings or otherwise in writing to the adverse party at least thirty days before the trial, of the country, number, date, and name of the patentee of any patent, the title, date, and page numbers of any publication to be relied upon as anticipation of the patent in suit or, except in actions in the United States Court of Federal Claims, as showing the state of the art, and the name and address of any person who may be relied upon as the prior inventor or as having prior knowledge of or as having previously used or offered for sale the invention of the patent in suit. In the absence of such notice proof of the said matters may not be made at the trial except on such terms as the court requires. Invalidity of the extension of a patent term or any portion thereof under section 154(b) or 156 of this title because of the material failure—

(1) by the applicant for the extension, or

(2) by the Director,

to comply with the requirements of such section shall be a defense in any action involving the infringement of a patent during the period of the extension of its term and shall be pleaded. A due diligence determination under section 156(d)(2) is not subject to review in such an action.

RESPONDENT'S BRIEF

No. 13-369

RECORD AND BRIEFS

Supreme Court, U.S.
FILED
MAR 26 2014
OFFICE OF THE CLERK

IN THE

Supreme Court of the United States

NAUTILUS, INC.,

Petitioner,

v.

BIOSIG INSTRUMENTS, INC.,

Respondent.

On Writ of Certiorari to the United States Court of Appeals for the Federal Circuit

BRIEF FOR RESPONDENT

SEAN M. HANDLER
DANIEL C. MULVENY
KESSLER, TOPAZ,
MELTZER & CHECK LLP
280 King of Prussia Road
Radnor, PA 19087
610-667-7706

MARK D. HARRIS
Counsel of Record
JAMES H. SHALEK
CELIA V. COHEN
PROSKAUER ROSE LLP
Eleven Times Square
New York, NY 10036
212-969-3000
mharris@proskauer.com

STEVEN M. BAUER
JOHN E. ROBERTS
ANTHONY H. CATALDO
JINNIE REED
PROSKAUER ROSE LLP
One International Place
Boston, MA 02110
617-526-9600

Counsel for Respondent

Library of Congress
Law Library

QUESTIONS PRESENTED

1. Whether a patent claim is invalid for indefiniteness where the traditional tools of claim construction establish its meaning, simply because lawyers may devise other interpretations, years after issuance, that are not "outlandish" or "implausible"?

2. Whether an accused infringer challenging a patent claim as indefinite may overcome the statutory presumption of validity, 35 U.S.C. § 282(a), without introducing any evidence that a person skilled in the art would have been unable to understand the claim's meaning?

PARTIES TO THE PROCEEDING AND RULE 29.6 STATEMENT

The corporate disclosure statement contained in Biosig Instruments, Inc.'s brief in opposition to the petition for a writ of certiorari remains accurate.

TABLE OF CONTENTS

Page

QUESTIONS PRESENTED i

PARTIES TO THE PROCEEDING AND RULE 29.6 STATEMENT ii

TABLE OF CONTENTS..... iii

TABLE OF CITED AUTHORITIES v

INTRODUCTION..... 1

STATEMENT OF THE CASE 3

SUMMARY OF ARGUMENT..... 18

ARGUMENT..... 20

I. A CLAIM SATISFIES THE DEFINITENESS REQUIREMENT WHEN ITS MEANING IS REASONABLY CLEAR TO A PERSON SKILLED IN THE ART..... 20

A. The Certainty Required In Claiming Is That Which Is Reasonable..... 21

B. The Substance Of The Federal Circuit's Test Was Correct..... 31

Table of Contents

Page

II. NAUTILUS'S PROPOSED TEST IS CONTRADICTED BY THIS COURT'S DECISIONS AND NOT SUPPORTED BY THE PATENT ACT.....34

A. Nautilus's Test Finds No Support In The Text Of § 112.....35

B. This Court's Precedents Refute Nautilus's Test.....38

C. Nautilus's Test Misapprehends The Role Of The PTO.....43

D. Nautilus's Policy Arguments Are Off-Base And Irrelevant.....45

III. THE '753 PATENT IS DEFINITE.....50

A. The Meaning Of Claim 1 Is Unambiguous When Viewed In Light Of The Customary Tools Of Claim Construction.....50

B. There Is No Meaningful Difference In Interpretation Between The Majority Opinion And The Concurrence Below.....51

C. In Light Of The Presumption Of Validity, Nautilus's Failure To Make An Evidentiary Showing That The Claim Is Unclear Further Dooms Its Indefiniteness Challenge.....54

CONCLUSION 57

TABLE OF CITED AUTHORITIES

Page

CASES

Andrew Corp. v. Gabriel Elecs., Inc.,
847 F.2d 819 (Fed. Cir. 1988) 26

Ass'n for Molecular Pathology v. Myriad Genetics, Inc.,
133 S. Ct. 2107 (2013) 21

Autogiro Co. of Am. v. United States,
384 F.2d 391 (Ct. Cl. 1967) 23

Ball & Socket Fastener Co. v. Kraetzer,
150 U.S. 111 (1893) 30, 40

Bank of Am. Nat'l Trust & Sav. Ass'n v. 203 N. LaSalle St. P'ship,
526 U.S. 434 (1999) 30

Berger v. New York,
388 U.S. 41 (1967) 35

Bonito Boats, Inc. v. Thunder Craft Boats, Inc.,
489 U.S. 141 (1989) 21, 27, 47

Brigham City, Utah v. Stuart,
547 U.S. 398 (2006) 36

Brown v. Guild,
23 Wall (90 U.S.) 181 (1874) 22

Cited Authorities

Page

Carnegie Steel Co. v. Cambria Iron Co.,
185 U.S. 403 (1902) 28, 51, 55

Corwin v. Marney, Orton Inv.,
788 F.2d 1063 (5th Cir. 1986) 36

Coupe v. Royer,
155 U.S. 565 (1895) 38

Datamize, LLC v. Plumtree Software, Inc.,
417 F.3d 1342 (Fed. Cir. 2005) 32

Deere & Co. v. Bush Hog, LLC,
703 F.3d 1349 (Fed. Cir. 2012) 26

Eibel Process Co. v. Minn. & Ontario Paper Co.,
261 U.S. 45 (1923) ..... *passim*

Festo Corp. v.
Shoketsu Kinzoku Kogyo Kabushiki Co.,
535 U.S. 722 (2002) ..... *passim*

General Electric Co. v. Wabash Appliance Corp.,
304 U.S. 364 (1938) 41, 42, 43

Graham v. John Deere Co.,
383 U.S. 1 (1966) 29, 55

Graver Tank & Mfg. Co. v. Linde Air Prods. Co.,
339 U.S. 605 (1950) 27

Cited Authorities

Page

Halliburton Energy Servs., Inc. v. M-I LLC,
514 F.3d 1244 (Fed. Cir. 2008) 32, 39

Hamilton Beach Brands, Inc. v. Sunbeam Prods., Inc.,
726 F.3d 1370 (Fed. Cir. 2013) 55

Honeywell Int'l, Inc. v. Int'l Trade Comm'n,
341 F.3d 1332 (Fed. Cir. 2003) 32

In re Buszard,
504 F.3d 1364 (Fed. Cir. 2007) 44, 45

In re Greer,
484 F.2d 488 (C.C.P.A. 1973) 37

J.E.M. Ag Supply, Inc. v. Pioneer Hi-Bred Int'l, Inc.,
534 U.S. 124 (2001) 37, 49-50

Keystone Bridge Co. v. Phoenix Iron Co.,
95 U.S. 274 (1877) 41

Keystone Mfg. Co. v. Adams,
151 U.S. 139 (1894) 38, 39

Knickerbocker Life Ins. Co. v. Norton,
96 U.S. 234 (1877) 39

KSR Int'l Co. v. Teleflex Inc.,
550 U.S. 398 (2007) 55, 56

Cited Authorities

Page

Leatherman v. Tarrant Cnty. Narcotics Intelligence and Coordination Unit, 507 U.S. 163 (1993) 36

Liebel-Flarsheim v. Medrad, Inc., 358 F.3d 898 (Fed. Cir. 2004) 39

Markman v. Westview Instrument, Inc., 52 F.3d 967 (Fed. Cir. 1995), *aff'd*, 517 U.S. 370 (1996) ..... *passim*

Markman v. Westview Instrument, Inc., 517 U.S. 370 (1996) ..... *passim*

Maryland v. Garrison, 480 U.S. 79 (1987) 35

McClain v. Ortmayer, 141 U.S. 419 (1891) 30, 38

Merrill v. Yeomans, 94 U.S. 568 (1876) 36-37, 40

Microsoft Corp. v. i4i Ltd. P'ship, 131 S. Ct. 2238 (2011) 48-49, 54, 55, 56

Miles Labs., Inc. v. Shandon Inc., 997 F.2d 870 (Fed. Cir. 1993) 23

Minerals Separation, Ltd. v. Hyde, 242 U.S. 261 (1916) 22, 25, 26, 51

Cited Authorities

Page

Mowry v. Whitney,
14 Wall (81 U.S.) 620 (1871) ..... .26

Novo Indus., L.P. v. Micro Molds Corp.,
350 F.3d 1348 (Fed. Cir. 2003) ..... .32

Radio Corp. of Am. v. Radio Eng'g Labs., Inc.,
293 U.S. 1 (1934) 54, 55, 56

Ryan v. Goodwin,
21 F. Cas. 110 (C.C.D. Mass. 1839) ..... .39

S3 Inc. v. NVIDIA Corp.,
259 F.3d 1364 (Fed. Cir. 2001) ..... .53

Senmed, Inc. v. Richard-Allan Med. Indus., Inc.,
888 F.2d 815 (Fed. Cir. 1989) ..... .48

Singh v. Brake,
317 F.3d 1334 (Fed. Cir. 2003) ..... .55

Smith v. Snow,
294 U.S. 1 (1935) 28, 30, 38

Smithkline Beecham Corp. v. Apotex Corp.,
247 F. Supp. 2d 1011 (N.D. Ill. 2003) ..... .47

Star Scientific, Inc. v. R.J. Reynolds Tobacco Co.,
537 F.3d 1357 (Fed. Cir. 2008) ..... .33

Cited Authorities

Page

Steele v. United States,
267 U.S. 498 (1925) 36

Topliff v. Topliff,
145 U.S. 156 (1892) 24

U.S. ex rel. Lemmon v. Envirocare of Utah, Inc.,
614 F.3d 1163 (10th Cir. 2010).....36

United Carbon Co. v. Binney & Smith Co.,
317 U.S. 228 (1942) 22, 42, 43

United States v. Adams,
383 U.S. 39 (1966) 28, 30, 40

United States v. Tohono O'Odham Nation,
131 S. Ct. 1723 (2011) 46

Universal Oil Prods. Co. v. Globe Oil & Refining Co.,
322 U.S. 471 (1944) 40

Warner-Jenkinson Co. v. Hilton Davis Chem. Co.,
520 U.S. 17 (1997) 27, 34, 38, 49

White v. Dunbar,
119 U.S. 47 (1886) 41

Winans v. Denmead,
56 U.S. 330 (1853) 26

Page

Young v. Lumenis, Inc.,
492 F.3d 1336 (Fed. Cir. 2007) 22-23

CONSTITUTION AND STATUTES

U.S. Const. art. 1, § 8, cl. 8 21

U.S. Const. amend. IV 35

35 U.S.C. § 2(b)(2) 44

35 U.S.C. § 33 38

35 U.S.C. § 101 50

35 U.S.C. § 112 ..... *passim*

35 U.S.C. § 112(b) 21

35 U.S.C. § 162 37

35 U.S.C. § 282 ..... 22, 54, 55

35 U.S.C. § 282(b)(3) 49

35 U.S.C. § 321(b) 49

35 U.S.C. § 326(e) 49

Act of Apr. 10, 1790, § 2 35

Page

Act of July 4, 1836, § 5 36

Leahy-Smith America Invents Act, Pub. L. No. 112-29, 125 Stat. 284 (2011) 22

S. Rep. No. 71-135 (1930) 37

OTHER AUTHORITIES

Corbin on Contracts § 39.10 (2006) 39

Federal Trade Commission, *The Evolving IP Marketplace: Aligning Patent Notice and Remedies with Competition* (2011).....47

Joseph E. Root, *Rules of Patent Drafting* (2011).....46

Rick McDermott, *Lessons Learned from Fifteen Years in the Trenches of Patent Litigation*, 14 Marq. Intell. Prop. L. Rev. 471 (2010) 29

Robert C. Faber, *Faber on Mechanics of Patent Claim Drafting* (6th ed. 2013).....46

Robert C. Kahrl, *Patent Claim Construction* (2013).....49

Stephen A. Becker, *Patent Applications Handbook* § 2:9 (2013).....46

Page

Supplementary Examination Guidelines for Determining Compliance With 35 U.S.C. 112 and for Treatment of Related Issues in Patent Applications, 76 Fed. Reg. 7162 (2011) 44

Thomas L. Creel, *Patent Claim Construction and Markman Hearings* § 1-1 (2013).....29

Tony Dutra, *PTAB's Latest Decisions on Merits Include One Set of Claims Upheld, No Amendments*, 87 PTCJ 1010 (Mar. 3, 2014).....49

Tun-Jen Chiang & Lawrence B. Solum, *The Interpretation-Construction Distinction in Patent Law*, 123 Yale L.J. 530 (2013).....46

5 C. Wright & A. Miller, *Federal Practice and Procedure* § 1291 (1969).....36

U.S. Gov't Accountability Office, GAO-13-465, *Intellectual Property: Assessing Factors That Affect Patent Infringement Litigation Could Help Improve Patent Quality* 28 (2013).....24

U.S. Patent & Trademark Office, *Manual of Patent Examining Procedure* § 2173.02(I) (rev. ed. 2012).....43

BRIEF FOR RESPONDENT

Respondent Biosig Instruments, Inc. respectfully submits that the judgment of the court of appeals should be affirmed.

INTRODUCTION

The Federal Circuit held below that a patent claim satisfies the definiteness requirement of 35 U.S.C. § 112, ¶ 2 so long as a person skilled in the art would be able to discern its meaning from the intrinsic evidence in the patent—the claim language, the specification, and the prosecution history. That decision followed directly from a long line of cases in this Court and the Federal Circuit holding that claims must be sufficiently clear to provide *reasonable* notice to the public about the boundaries of the patented invention. A claim provides reasonable notice if a skilled artisan employing the established canons of claim construction can ascertain its meaning.

Applied to the invention here—a heart-rate monitor activated by the hands during exercise—that rule leads to a straightforward and intuitive result. The disputed claim uses the term "spaced relationship" to describe the configuration of two electrodes mounted on the monitor. The court below held that the term meant simply that the electrodes were physically separate from each other. Drawing on the specification, the diagrams, and other material, the court determined that the space had to be a hand's breadth or less. Based on those clear indicia, the court correctly concluded that the term, and the claim, were definite.

Nautilus argues, however, that the patent's principal claim should be invalidated because "spaced relationship" is purportedly open to different interpretations. Nautilus tendered no evidence that it had any actual doubt about the patent's scope. Nor did it present any evidence that a person skilled in the art would have been confused. But in Nautilus's view, a term is definite only if its meaning is so clear that *no reasonable person* could feasibly dispute it. Under Nautilus's test, the bare fact that two parties take opposing positions about the meaning of a claim or term—a ubiquitous situation in patent litigation—would serve to invalidate it.

To call Nautilus's position radical is an understatement. It flies in the face of more than 100 years of precedent in which this Court has *construed*—not *invalidated*—claims that are arguably susceptible to more than one reading. It ignores the recognized interest in preserving the inventor's interest in his creation. And it ignores the Court's teachings that words cannot perfectly capture an invention, and therefore that the patent laws demand only a level of precision and clarity that is reasonable.

This case, moreover, belies any contention that a no-reasonable-person standard is needed to discourage misuse of the patent system. The heart-rate monitor here passes every test of socially valuable innovation. It solved a longstanding engineering problem, thereby representing a significant advance in the art. It was approved multiple times by the Patent and Trademark Office. It has enjoyed considerable commercial success. And it was created by an individual inventor whose company, Biosig, not only licenses the technology, but also practices the invention, manufacturing and selling devices that incorporate it.

Nautilus's test would create many more problems than it would cure. Patents both weak and strong would be invalidated *en masse* because few can satisfy the level of crystalline clarity that Nautilus demands. Incentives for innovation and disclosure would be dampened in light of the greater risk and ease of invalidation. Patent litigation, conversely, would spike; rather than pay for a license, parties would be incentivized to infringe and then, if sued, devise creative interpretations of claim terms to demonstrate the existence of a fatal ambiguity. And infringement suits themselves would become far more labored.

Nautilus's arguments are not supported by the text of the Patent Act, by precedent, or by policy. They should be rejected and the Federal Circuit's decision affirmed.

STATEMENT OF THE CASE

1. Dr. Gregory Lekhtman, the inventor of the patent at issue (U.S. Patent No. 5,337,753, or "the '753 patent"), was born and educated in the former Soviet Union. (J.A. 142.) He received an undergraduate degree in electrical engineering from Moscow University and a doctorate in neurophysiology and neurocybernetics from the Brain Research Institute of the Academy of Medical Sciences. (*Id.*) In 1974, believing that economic opportunities were better in the West, he and his family immigrated to Canada, where he began to work in the field of medical electronics—specifically, on the development of biometric devices. (*Id.*) Among his first projects was the development of a nerve-controlled hand prosthesis for amputees. (*Id.*) Over the next 40 years, Dr. Lekhtman received nine United States patents for biometric devices, including the heart-rate monitor at issue here, as well as numerous foreign patents. (*Id.*)

In 1983, Dr. Lekhtman founded Biosig Instruments, Inc., a company in the business of medical and fitness electronics. (*Id.*) Besides holding the patent rights to Dr. Lekhtman's inventions, Biosig manufactures devices based on the underlying technology and licenses that technology throughout North America. (*Id.* at 143.) Biosig currently sells to consumers heart-rate monitors that practice the '753 patent under the brand name "Insta-Pulse." (*Id.* at 162-63.) It also has supplied over 100,000 monitors incorporating the '753 patent to leading manufacturers of exercise equipment, such as Cybex and Star Trac. (*Id.* at 143, 156-57.)

2. The '753 patent teaches an invention for measuring heart rate during exercise. As of the early 1990s, if a person wanted to measure his heart rate while exercising, the options were to strap electrodes to his chest—a cumbersome and impractical method—or to use a relatively inaccurate handheld device. (*Id.* at 152-53.) Dr. Lekhtman's invention is an apparatus for accurately measuring heart rate through electrodes that the user can grasp with his hands during exercise. (*Id.* at 153-54.) To achieve that technological breakthrough, Dr. Lekhtman overcame a number of engineering obstacles that derive from the way the heart and other muscles emit electrical signals. (*Id.* at 152-57.)

a. Every time the heart beats, it emits an electrical pulse in a wave pattern known as an electrocardiograph ("ECG"). (*Id.* at 214.) Figure 1 below depicts a single ECG waveform, with the x-axis representing time and the y-axis representing the amplitude of the signal. (*Id.* at 215.)

FIGURE 1

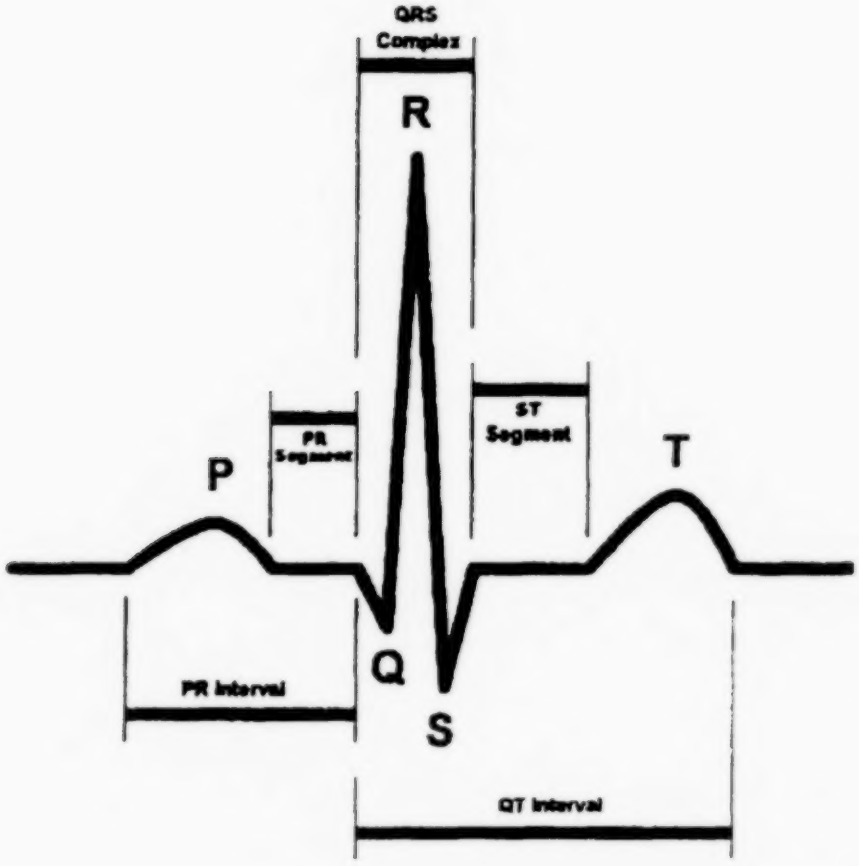

(*Id.*)

The ECG waveform has three key phases: the *P*, *QRS*, and *T* phases, each generated by a different area of the heart. The *R* peak has the highest amplitude of the various waveform components. (*Id.* at 214-15.) Because each *R* peak corresponds to a single beat of the heart, heart rate may be calculated by measuring the time between *R* peaks. (*Id.* at 215.)

Heart-rate monitors detect ECG waveforms through electrodes that are in contact with the skin. Before Dr.

Lekhtman's invention, accurate measurement of heart rate through electrodes in contact with the hands was difficult for a number of reasons. (*Id.* at 152-53.) All skeletal muscles, including hand muscles, emit an electrical signal known as an electromyogram ("EMG"). (*Id.* at 147.) The total electrical signal detected from the hands is thus a composite of the ECG waveform, EMG signals, and other noise. (*Id.*) Because EMG signals occur in the same amplitude range as ECG signals, the former can mask the *R* peak, making heart-rate detection difficult, as shown in Figure 2 below. (*Id.* at 147-49, 215.)

FIGURE 2

(*Id.*) The masking problem is particularly acute during exercise, when the EMG, but not the ECG, signals increase in amplitude and therefore create more noise in the heart-rate monitor. (*Id.* at 148-49.)

The difficulty of obtaining accurate ECG readings through the hands was well known in the exercise industry but remained unsolved until Dr. Lekhtman's invention. (*Id.* at 153.) Some prior art devices had attempted to deal with EMG noise through "downstream" electronic filtering (i.e., filtering out the EMG signal after it was detected by the electrodes, using additional circuitry). (*Id.* at 147-48, 152-53, 158-59, 161.) That process was not effective, however, because downstream filtering also degrades the ECG readings and the overall signal-to-noise ratio. (*Id.* at 147-48, 150.) Other prior art devices tried to work around the EMG problem by using chest-belt telemetry units, which are unwieldy. (*Id.* at 153.)

b. After years of work, Dr. Lekhtman solved the problem by devising a way to substantially remove EMG signals from ECG signals *before* electronic processing, so that the latter would yield a more accurate heart-rate reading. (*Id.* at 153-54.) The solution took advantage of a basic difference between the waveforms of the two types of signals. Because the heart is not aligned perfectly vertically, but tilts leftward from apex to bottom, ECG signals that are measured on opposite sides of the body (defined by a line running from the left shoulder through the right side of the waist) have opposite polarities—e.g., on one hand, the wave appears *below* the x-axis, while on the other hand, the wave appears *above* the x-axis. (*Id.* at 146, 213.) By contrast, EMG signals from the left and right hands always have the same polarity. (*Id.* at 149.)

That difference inspired an elegant solution to the EMG noise problem. Dr. Lekhtman's idea involved setting up his monitor so that the amplitudes of the EMG signals detected from each hand were equal. (*Id.* at 41, 153.) The combined EMG and ECG signals detected from each hand would then be fed into a circuit known as a difference (or "differential") amplifier, which subtracts waves with similar amplitudes. (*Id.* at 41, 155.) Since the EMG signals detected by Dr. Lekhtman's monitor from each hand have the same amplitude and the same polarity, the difference amplifier cancels them out. (*Id.* at 41, 53, 57.) ECG signals have opposite polarity, however, and are therefore effectively doubled in the difference amplifier (akin to when a negative number is subtracted from a positive one). (*Id.* at 41, 58.)

Although EMG signals always have the same polarity, it is a fact of human physiology that they do not inherently share the same amplitude when measured on different parts of the body. (*Id.* at 149-50.) Accordingly, in Dr. Lekhtman's monitor, the EMG signals detected from each hand must be equalized before they can be cancelled out. (*Id.* at 153, 155.) Biosig offered uncontested expert testimony that the detected EMG amplitude depends on a number of factors associated with the geometric configuration of the detecting electrodes: their shape, size, and material, and the separation distance between the two electrodes in contact with each hand. (*Id.* at 155-56.) It was undisputed that a person skilled in the art in 1992 would have known how to configure a set of electrodes to equalize the EMG detected at each hand using a basic oscilloscope. (*Id.* at 155, 160-61.)

c. Claim 1 of the '753 patent discloses Dr. Lekhtman's invention. The claim begins by describing the structural aspects of the invention.[1] That structure consists of an "elongate member" (i.e., a cylindrical bar), on each half (left and right) of which is mounted a pair of electrodes: one "live electrode" and one "common electrode" in a "spaced relationship" with each other. (J.A. 61.) The first live electrode is connected to one terminal of the difference amplifier, while the second live electrode is connected to the other terminal of the difference amplifier. (*Id.* at 62.) The claim adds: "*wherein*" the elongate member is held by the user, with one hand "contacting said first live electrode and said first common electrode," and the other hand "contacting said second live electrode and said second common electrode." (*Id.*) That "wherein" clause makes clear that the upper bound for the "spaced relationship" between the electrodes in each pair is the width of a hand. And the lower bound must be the minimal amount necessary so that the two electrodes do not merge into one.

1. The parties' Joint Appendix at the Federal Circuit contains the official published version of the '753 patent, which is formatted in numbered columns and rows. (*See* Fed. Cir. J.A. 1-15.) That is the version cited by the Federal Circuit in the decision below.

The following figure is an annotated version of Figure 1 of the '753 patent:

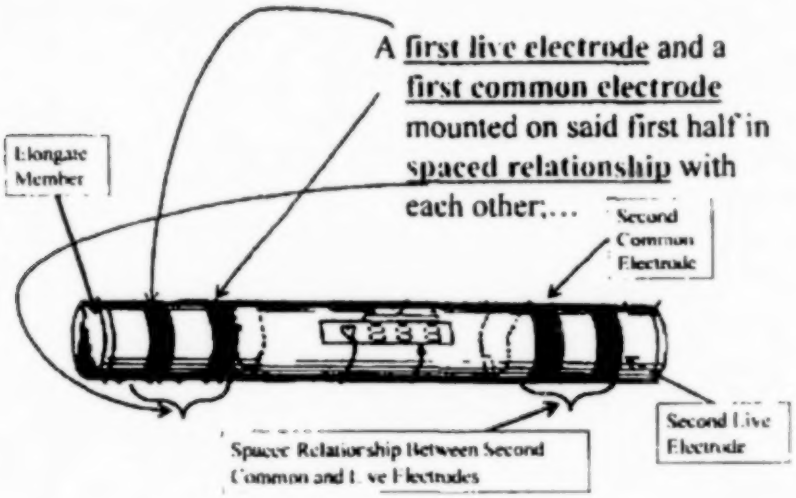

(*See id.* at 42, Fig. 1.)

Claim 1 also sets forth the functional limitation related to the removal of EMG signals:

> *whereby*, a first [EMG] signal will be detected between said first live electrode and said first common electrode, and a second [EMG] signal, of substantially equal magnitude and phase to said first [EMG] signal will be detected between said second live electrode and said second common electrode;
>
> *so that* when said first [EMG] signal is applied to said first terminal and said second [EMG] signal is applied to said second terminal, the first and second [EMG] signals will be subtracted from each other to produce a substantially zero [EMG] signal at the output of said difference amplifier.

(*Id.* at 62 (emphasis added).) A similar functional limitation states that the ECG signals from each hand will be run through the difference amplifier, which has the effect of adding the two ECG signals together due to their opposite polarities. (*Id.* at 63.)

d. The application that matured into the '753 patent was filed on June 6, 1992. (*Id.* at 69.) The U.S. Patent and Trademark Office (PTO) twice rejected the claims for indefiniteness on issues unrelated to this case.[2] After amendments, the '753 patent issued on August 16, 1994. (*Id.* at 40.)

3. Following issuance of the patent, Biosig disclosed the invention to Nautilus's predecessor, Stairmaster Sports Medical Products, Inc., for which Dr. Lekhtman had been a consultant. (*Id.* at 26, 163.) Unlike its competitors, however, Stairmaster declined to license the technology and simply took Dr. Lekhtman's invention without paying for it. (*Id.* at 26.) After it acquired Stairmaster, Nautilus (another client for whom Dr. Lekhtman had consulted) also refused to reach an agreement with Biosig and continued to sell infringing products. (*Id.* at 26, 30, 165.) Nautilus has never denied that its accused exercise apparatus and heart-rate monitors incorporate spaced sets of electrodes

---

2. The first rejection occurred because the original version of Claim 1 did not recite a structure for monitoring heart rate. (Fed. Cir. J.A. 74.) The second occurred because the claim did not recite a structure for converting the output of the difference amplifier into a heart rate or a connection between the display device and other circuitry. (*Id.* at 88.) Biosig overcame these objections by adding limitations to its claim. (*Id.* at 82-83, 92-94.) Tellingly, at no time did the PTO raise any objection on indefiniteness grounds to the term "spaced relationship."

and a difference amplifier to employ Dr. Lekhtman's novel solution. Rather, Nautilus has moved from defense to defense in an attempt to justify its misappropriation of Dr. Lekhtman's ideas, first raising the purported indefiniteness of the "spaced relationship" six years into their litigation.

In August 2004, Biosig sued Nautilus for infringement of the '753 patent. (*Id.* at 23.) Shortly after discovery began, Nautilus filed a request for reexamination with the PTO. (*Id.* at 23, 27.) Pending the outcome of that process, Biosig voluntarily dismissed its suit without prejudice, subject to a tolling agreement. (*Id.* at 28.) All told, Nautilus filed *three separate* requests for reexamination, each ultimately unsuccessful.

In its first request, Nautilus argued that Claim 1 was anticipated by prior art, principally the Fujisaki patent (U.S. Patent No. 4,444,200), which disclosed a heart-rate monitor utilizing four electrodes and a difference amplifier. (*Id.* at 180.) Biosig responded with expert testimony that the Fujisaki patent was silent about the effects of EMG signals, and the Fujisaki monitor could not have removed their effects. (J.A. 106-07.) In support of its arguments, Biosig submitted a declaration by Dr. Lekhtman, in which he demonstrated that Fujisaki indeed did not equalize and remove EMG signals. (*Id.* at 150.) By contrast, Dr. Lekhtman explained, a person skilled in the art would know how to adjust the design variables (space, size, shape and materials of the electrodes) of his invention so that the EMG signals could be equalized and cancelled out. Further supporting that point, Biosig submitted an expert report from Dr. Henrietta Galiana, Chair of the Department of Biomedical Engineering at

McGill University, who recounted that a technician in her laboratory, following the specification in the '753 patent, was able in two hours to build the claimed heart-rate monitor that successfully removed EMG signals. (*Id.* at 201, 226-28.)

Before the examiner ruled on the first request for reexamination, Nautilus submitted a *second* reexamination petition, rearguing obviousness based on Fujisaki and an additional prior art reference. The PTO issued a ruling on both requests for reexamination, confirming all claims in the '753 patent over the prior art. (*Id.* at 78-81.) The patent examiner agreed that none of the prior art taught a method involving electrodes that had been configured to equalize EMG signals detected from the hands so that they could be cancelled out. (*Id.* at 79-80.)

Nautilus later urged the PTO to reexamine the patent yet a *third* time, based on a proffer of still more prior art. (*Id.* at 285.) The PTO denied that request, holding that the evidence was cumulative. (*Id.* at 285-87.) During all three reexamination proceedings, Nautilus had no difficulty mapping prior art against each limitation of the '753 patent and professed no inability to understand the meaning and scope of those limitations. Nautilus raised the purported indefiniteness of Dr. Lekhtman's claimed invention only after it had failed to invalidate the claim by reexamination.

4. With all claims of the '753 patent confirmed as patentable, Biosig filed a new complaint against Nautilus in October 2010. (*Id.* at 7, 23-32.) Before discovery was complete, the district court *sua sponte* ordered the parties to a *Markman* hearing. Regarding the phrase

"spaced relationship" in Claim 1, the parties agreed that it had the common-sense meaning of a distance between the electrodes in the first pair and the second pair. (*Id.* at 37-38.) Subsequently, despite its earlier agreement (and implied understanding) about the construction of "spaced relationship," Nautilus contended that during reexamination Biosig had disavowed configurations where the spacing between the electrodes was less than the width of a single electrode. (*Id.* at 245, 249.) The court rejected that new contention. It construed "spaced relationship" as a "defined relationship between the live electrode and the common electrode on one side of the cylindrical bar, and the same or a different defined relationship between" the electrodes on the other side of the bar. (Pet. App. 43a-44a.)

Following the *Markman* hearing, the district court directed each side to file summary judgment motions. Only then did Nautilus argue, for the very first time, that the patent was invalid for indefiniteness. Specifically, Nautilus argued that the term "spaced relationship" did not distinguish the '753 patent from Fujisaki. Biosig responded that Fujisaki was distinguished based on its failure to practice the functional limitation of EMG removal. Biosig offered declarations of persons skilled in the art in support: the previously mentioned declarations of Dr. Lekhtman (J.A. 141-77) and Dr. Galiana (*id.* at 201-234), and another from Dr. George Yanulis, an expert in biomedical engineering and a consultant in the field of medical devices (*id.* at 270-79). Neither then, nor at any time since, did Nautilus offer any evidence concerning what a person skilled in the art did or did not understand a "spaced relationship" to mean.

The district court announced its decision from the bench without issuing a written opinion. (Pet. App. 50a-106a.) It held that the term "spaced relationship" was indefinite because, in the court's view, a person skilled in the art could not determine how far apart the electrodes should be.

The district court alternated between two different characterizations of the purported indefiniteness problem. In some places, it suggested that the term "spaced relationship" was too broad. (*See* Pet. App. 90a ("A spaced relationship means it has to be a certain relationship, but doesn't tell you what the certain relationship is. One inch, an inch-and-a-quarter, two inches? One doesn't know.").) In other places, it complained that there was "nothing in the specifications or the claim or the file history" to teach an expert how to use the electrode spacing to cancel out EMG signals. (*id.* at 103a.) In so ruling, the court conflated definiteness with enablement. It also ignored Dr. Lekhtman's and Dr. Yanulis's unrebutted testimony about the knowledge of a person skilled in the art. The district court ultimately considered the claims "indefinite because a person skilled in the art could not translate the definition . . . into meaningfully precise claim scope." (*Id.* at 103a.)

5. Biosig appealed. Before the Federal Circuit, Nautilus shifted its indefiniteness argument and focused solely on the tests used by Dr. Galiana and Dr. Lekhtman to determine whether the functional recitations of the "whereby" clause of the claim were met by a particular device. The Federal Circuit held unanimously that the claims at issue were not indefinite and therefore reversed the district court's decision, remanding for further proceedings. The panel issued two separate opinions.

a. The majority recognized that the sole question before it was whether the asserted claims were invalid for indefiniteness because the term "spaced relationship" did not sufficiently define the spacing between the common and live electrodes. (*Id.* at 12a.) The proper way to answer that question, according to the court, was through "[g]eneral principles of claim construction." (*Id.* at 14a.) That is, the court should consider "the intrinsic evidence consisting of the claim language, the specification, and the prosecution history" as well as any relevant extrinsic evidence. (*Id.*) At the end of that process, "if reasonable efforts at claim construction result in a definition that does not provide sufficient particularity and clarity to inform skilled artisans of the bounds of the claim, the claim is insolubly ambiguous and invalid for indefiniteness." (*Id.* at 13a) (citation omitted).

Here, claim construction dictated that "spaced relationship" had well-defined boundaries. The court found that a person skilled in the art reading the patent would know that the distance between the live and common electrodes could not be greater than the width of a user's hand because the claims require that each electrode be in contact with two distinct points of the hand. (*Id.* at 16a.) That person would also know that the distance between the electrodes could not be so infinitesimally small that they merged into a single electrode with one detection point. (*Id.*) Thus, the '753 patent disclosed certain "inherent parameters" that were sufficient for a skilled artisan to understand the claim. (*Id.*) The court rejected the district court's view that specific numerical limitations were required. (*Id.* at 25a.)

The majority also noted that the functional element of Claim 1 "shed[] further light" on the meaning of "spaced relationship." (*Id.* at 16a.) The court accepted Dr. Lekhtman's declaration submitted during reexamination, stating that a skilled artisan would be able to adjust the design variables on the monitor so that the EMG signals were equalized and substantially cancelled, and Dr. Galiana's declaration that it had actually been tested and done. (*Id.* at 19a.) As for the district court's concern that the specification failed to spell out the precise methodology, the panel majority noted that question was not properly analyzed in connection with indefiniteness under § 112, ¶ 2 but rather should be analyzed in the context of enablement under § 112, ¶ 1. (*Id.* at 24a.)

b. In a separate concurrence, Judge Schall agreed that the district court erred in holding the patent invalid for indefiniteness. He agreed that the district court had given the phrase a straightforward construction, namely a fixed spatial relationship between the live electrode and the common one on each side of the elongate member. He also agreed that intrinsic evidence disclosed the "inherent parameters" of that spacing (*id.* at 31a): it had to be wider than zero and narrower than a hand's breadth. He echoed the majority's statement that while that construction could be seen as broad, "breadth is not indefiniteness." (*Id.* at 23a (citations omitted).)

In Judge Schall's view, the invalidity analysis should have stopped there. Nautilus had not challenged the district court's construction by conditional cross-appeal or otherwise. As a result, the question of whether the functional limitation of EMG removal confirmed that the term "spaced relationship" was definite "is not currently

before us." (*Id.* at 32a.) There was no indication that Judge Schall questioned whether the functional limitation stated part of the metes and bounds of the overall claim, and there is no basis to think that his reading of that limitation or of the claim as a whole would have been different from the majority's had he reached that issue. But the concurrence saw no need to address a functional limitation that neither party had argued was a limitation under review.

SUMMARY OF ARGUMENT

I. The Federal Circuit correctly held that the patent claim at issue is definite because a person skilled in the art with access to all the traditional tools of claim construction—the written specification, the claims as a whole, and the prosecution history—could determine its meaning. Claims are not indefinite merely because, superficially, they appear to be open to more than one interpretation. As this Court has long held, the notice that a patent claim provides need only be reasonable, not perfect. The Court has recognized several reasons why claims are typically less than perfectly precise, stemming from the limitations of language and the difficulty of reducing an abstract invention to a definitive verbal description. Claims are definite even if they are arguably susceptible to more than one reading so long as their true meaning can be ascertained by employing the ordinary tools of claim construction.

II. Nautilus advocates a new and radical standard, according to which a claim should be invalidated as indefinite unless it is so precise that no reasonable person could disagree about its meaning. That test demands a

degree of certainty in claiming far beyond anything the patent statute or this Court has ever required.

In fact, this Court has expressly rejected such a position in a long line of cases holding that if a patent claim is susceptible to two interpretations, then the reading that will preserve the patent should be adopted. Those cases foreclose any argument that a claim must be immune from reasonable dispute. To the contrary, the Court's cases on claim construction, such as *Markman v. Westview Instruments, Inc.*, take for granted the existence of reasonable disputes over the meaning of a claim. If Nautilus is correct, then ambiguous claims would never be construed; they would be immediately invalidated for indefiniteness.

Beyond these doctrinal shortcomings, Nautilus's proposed test would disrupt the fundamental expectations of the patent system. If Nautilus's view carries the day, unscrupulous infringers would need only raise some "reasonable" alternative construction to escape the consequences of what has heretofore always been recognized to be a misappropriation of an inventor's ideas. The incentives to innovate and disclose would be weakened, which could have a profoundly negative effect on the patent system as a whole. Imposing such a drastic change to the patent system is the proper province of Congress, not the Court.

III. In all events, the patent at issue is definite under any standard. Nautilus purports not to know what a "spaced relationship" is. But there is nothing indefinite about that term; as the district court held, it simply means that the electrodes are separated by a space. The

specification and other limitations provide parameters that allow a person skilled in the art to determine the proper distance of the "spaced relationship" for any given set of electrodes and type of exercise equipment on which they will be mounted.

Although Nautilus tries to manufacture ambiguity by pointing to purported differences between the Federal Circuit majority and concurrence, the panel did not disagree on the meaning of the claim being asserted *as a whole*, which is all that matters for definiteness. And beyond pointing to this non-existent difference of opinion between the majority and concurrence, Nautilus has presented no evidence that a person skilled in the art would be unable to ascertain the meaning of the claim at issue. Nautilus has thus failed to overcome with clear and convincing evidence the statutory presumption that Biosig's patent is valid. Indeed, under any standard of proof and any view of definiteness, the claim is definite and should be upheld.

ARGUMENT

I. A CLAIM SATISFIES THE DEFINITENESS REQUIREMENT WHEN ITS MEANING IS REASONABLY CLEAR TO A PERSON SKILLED IN THE ART.

For well over a century, this Court has explained that a patent is definite if it reasonably informs a skilled artisan of the invention being claimed. The Court has never demanded perfect clarity in claiming; to the

contrary, it has explicitly recognized that precise claiming is impossible. Indeed, an unmistakable theme running through the Court's patent precedent is that claims will often be at least arguably amenable to more than one interpretation, but the tools of claim construction can be employed to ascertain a disputed claim's true meaning.

Claim construction is precisely what the Federal Circuit did below. It utilized the proper canons of construction to determine that Biosig's claim had a simple meaning that any skilled artisan could understand. That is all that is mandated by § 112's definiteness requirement.

A. The Certainty Required In Claiming Is That Which Is Reasonable.

1. The purpose of the patent laws is to "promote the Progress of Science and useful Arts." U.S. Const. art. 1, § 8, cl. 8. From their inception, the patent laws have accomplished that end by carefully balancing the goal of incentivizing an inventor's research and development with the goal of encouraging the public to innovate outside the scope of the inventor's rights. *See Bonito Boats, Inc. v. Thunder Craft Boats, Inc.*, 489 U.S. 141, 146, 150-51 (1989); *see also Ass'n for Molecular Pathology v. Myriad Genetics, Inc.*, 133 S. Ct. 2107, 2116 (2013). Thus, patentees are required to disclose their inventions and, in exchange, those inventions receive legal protection from infringers for a term of years.

The definiteness requirement obligates patentees to "particularly point[] out and distinctly claim[]" their

inventions. 35 U.S.C. § 112, ¶ 2.[3] As Nautilus repeatedly emphasizes, the main purposes behind the requirement are to give the public notice of where innovation is legally permitted and to facilitate review by the PTO and the courts. (*See* Pet'r Br. 27-28, 32-33.) But those interests of the *definiteness* requirement are balanced by another purpose of the *patent laws* in general, namely, "secur[ing] to the inventor the reward he deserves." *Eibel Process Co. v. Minn. & Ontario Paper Co.*, 261 U.S. 45, 63 (1923). To focus on the former to the virtually complete exclusion of the latter, as Nautilus does, is a serious error.

2. Both this Court and the Federal Circuit have long followed the correct standard for definiteness under § 112, ¶ 2. A claim is definite if its meaning is *reasonably* clear to a person skilled in the art. *See United Carbon Co. v. Binney & Smith Co.*, 317 U.S. 228, 236 (1942) (requiring that claims be "reasonably clearcut"); *Minerals Separation, Ltd. v. Hyde*, 242 U.S. 261, 270 (1916) ("[T]he certainty which the law requires in patents is not greater than is reasonable, having regard to their subject matter."); *Brown v. Guild*, 90 U.S. 181, 224 (1874) (requiring that claims be "fairly understood"); *Young v. Lumenis, Inc.*,

---

3. Paragraph 2 of 35 U.S.C. § 112 was replaced with a newly designated § 112(b) when the Leahy-Smith America Invents Act ("AIA"), Pub. L. No. 112-29, took effect on September 16, 2012. The text of the two versions is virtually identical, with the only substantive change being the replacement of the former's reference to "applicant" with "inventor or joint inventor." The AIA also made non-substantive changes to other provisions of the Patent Act relevant here, including § 282. Because the '753 patent issued prior to the effective date of the AIA, the previous versions of these statutory provisions apply and are cited herein, unless otherwise noted. (*See* Pet. App. 12a n.3.)

492 F.3d 1336, 1346 (Fed. Cir. 2007); *Miles Labs., Inc. v. Shandon Inc.*, 997 F.2d 870, 875 (Fed. Cir. 1993). The notice need not—indeed, usually cannot—be perfect and devoid of all uncertainty. *See Festo Corp. v. Shoketsu Kinzoku Kogyo Kabushiki Co.*, 535 U.S. 722, 731 (2002); *Eibel Process*, 261 U.S. at 65. It need only be sufficient to convey to the skilled artisan a reasonable understanding of the metes and bounds of the claim.

As the Court has recognized, this reasonableness standard is dictated by the infeasibility of perfectly capturing an innovation with words. Because claiming is an inexact art, disputes will inevitably arise regarding the precise scope of a claim. In such instances, the Court has provided a detailed set of canons for construing the claim. Reasonable notice is that which permits a person skilled in the art to determine the claim's meaning by employing those established canons.

a. The Court has identified several reasons why inventions need not be claimed with perfect exactitude.

First, language is inherently imprecise. Unlike real property markers, claims mark patent boundaries with words, not objects. Due to the limitations of language, "patent claims may not capture every nuance of the invention or describe with complete precision the range of its novelty." *Festo*, 535 U.S. at 731. As the Federal Circuit's predecessor court observed: "Often the invention is novel and words do not exist to describe it. The dictionary does not always keep abreast of the inventor. It cannot. Things are not made for the sake of words, but words for things." *Autogiro Co. of Am. v. United States*, 384 F.2d 391, 397 (Ct. Cl. 1967) (quoted with approval in *Festo*, 535

U.S. at 731); *see also* U.S. Gov't Accountability Office, GAO-13-465, *Intellectual Property: Assessing Factors That Affect Patent Infringement Litigation Could Help Improve Patent Quality* 28 (2013) ("Language describing emerging technologies, such as software, may be inherently imprecise because these technologies are constantly evolving.").[4] Indeed, as the Court has noted, "[t]he specification and claims of a patent, particularly if the invention be at all complicated, constitute one of the most difficult legal instruments to draw with accuracy . . . ." *Topliff v. Topliff*, 145 U.S. 156, 171 (1892).

Second, in many situations, the nature of an invention may make it impossible to give exact specifications in advance. Notwithstanding that fact, the Court has long approved patents that are described in terms as clearly as feasible under the circumstances.

---

4. More generally, Justice Frankfurter once observed:

> Anything that is written may present a problem of meaning . . . . The problem derives from the very nature of words. They are symbols of meaning. But unlike mathematical symbols, the phrasing of a document, especially a complicated enactment, seldom attains more than approximate precision. If individual words are inexact symbols, with shifting variables, their configuration can hardly achieve invariant meaning or assured definiteness.

Hon. Felix Frankfurter, Some Reflections on the Reading of Statutes, Address Before the Association of the Bar of the City of New York (Mar. 18, 1947), in Record of the Association of the Bar of the City of New York, Vol. 2 (1947).

In *Minerals Separation*, 242 U.S. 261 (1916), for example, the Court upheld a process claim for separating metallic ore from worthless surrounding gangue. The claimed process entailed immersing the ore-gangue into a mixture of oil and water and agitating the mixture, but it did not specify the amount of oil or the degree of agitation required for each type of ore. *Id.* at 265, 270. The Court firmly rejected an indefiniteness challenge. Since "[t]he composition of ores varies infinitely, each one presenting its special problem," then "it is obviously impossible to specify in a patent the precise treatment which would be most successful and economical in each case." *Id.* at 271. An exhaustive description of the process for each type of ore was therefore not required. So long as the process overall was relatively clear, then even if some aspects were undefined and left to the "skill of the persons applying the invention," the patent was "clearly sufficiently definite to guide those skilled in the art to its successful application." *Id.*

To the same effect is *Eibel Process*, 261 U.S. 45 (1923). There, the claim described an improvement to a paper-making machine in which the feeding wire was set at an unspecified "high" elevation. *Id.* at 65. Again, the Court rejected an indefiniteness challenge to the claim, recognizing that "it was difficult for [the inventor] to be more precise," because the appropriate height depended on the varying conditions of speed and stock of any particular machine. *Id.* This did not disqualify the claims, because there was evidence showing that a person skilled in the art would have "no difficulty" determining the proper wire height. *Id.* at 65-66.

Based on the principles in *Minerals Separation* and *Eibel Process*, the Federal Circuit holds that terms of degree such as "high" or "substantial" are not void for indefiniteness so long as a person skilled in the art will be able to give them meaning. *See, e.g.*, *Andrew Corp. v. Gabriel Elecs., Inc.*, 847 F.2d 819, 821-22 (Fed. Cir. 1988); *see also Deere & Co. v. Bush Hog, LLC*, 703 F.3d 1349, 1359 (Fed. Cir. 2012). The certainty required in patents "is not greater than is reasonable, having regard to their subject matter." *Minerals Separation*, 242 U.S. at 270; *see also Mowry v. Whitney*, 81 U.S. 620, 644 (1871) ("[T]he definiteness of a specification must vary with the nature of its subject. Addressed as it is to those skilled in the art, it may leave something to their skill in applying the invention . . . .").[5]

Third, it is not always possible to anticipate and codify every possible way in which an invention may be enabled. Rather than allow an infringer to make "[u]nimportant and insubstantial substitutes for certain elements," thereby "defeat[ing] the patent" and destroying its value, *Festo*, 535 U.S. at 731-32, the Court more than 150 years ago introduced the "doctrine of equivalents." *See Winans v. Denmead*, 56 U.S. 330 (1853). The doctrine allows infringement to be found even where the alleged infringing product does not trespass upon the *literal* terms of a claim, so long as the infringing element is "equivalent" in some manner.

---

5. *Mowry* spoke of the "specification," by which it included the claims as well, because the patent under review had issued in 1847, before the Patent Act of 1870 separated the claims from the specification.

The Court has time and again reaffirmed the doctrine of equivalents over objections that it undermines the patent law's definiteness requirement by making it difficult for the relevant public to determine precisely where a patent's legal coverage ends. *See, e.g., Warner-Jenkinson Co. v. Hilton Davis Chem. Co.*, 520 U.S. 17, 25-26 (1997); *Graver Tank & Mfg. Co. v. Linde Air Prods. Co.*, 339 U.S. 605, 608-10 (1950). In *Graver Tank*, for instance, Justice Black argued vociferously in dissent that the doctrine of equivalents is "unjust to the public" because it blurs the boundaries of a patent, thereby leaving competitors uncertain about whether they can employ knowledge outside the scope of the claims. *Id.* at 613-15 (Black, J., dissenting). The Court has acknowledged the merits of the point. Nevertheless, "[e]ach time the Court has considered the doctrine," it has understood uncertainty to be "the price of ensuring the appropriate incentives for innovation, and it has affirmed the doctrine over dissents that urged a more certain rule." *Festo*, 535 U.S. at 723.

The doctrine of equivalents teaches that while an inventor must endeavor to define the peripheries of his innovation as well as language permits, some degree of imprecision is excused in order to "prevent an infringer from stealing the benefit of the invention." *Graver Tank*, 339 U.S. at 608. And by demanding that inventors provide reasonable notice regarding the boundaries of their inventions, the law encourages the public "to pursue innovations, creations, and new ideas beyond the inventor's exclusive rights." *Festo*, 535 U.S. at 731. The "delicate balance" between the interests of patent holders and the public is thereby achieved. *See Festo*, 535 U.S. at 731; *Bonito Boats*, 489 U.S. at 150-51.

b. Because claims need not possess perfect precision, it is inevitable that parties will sometimes disagree regarding the exact meaning of a claim. To address these disputes, the Court has set out a series of rules for determining the proper construction of a contested claim. The Court's longstanding experience resolving claim disputes demonstrates that a claim is not indefinite merely because it appears to be susceptible to more than one reading. Rather, a claim provides reasonable notice so long as its meaning can be ascertained by employing the established tools of claim construction.

Markman, 517 U.S. 370 (1996), the seminal modern case on claim construction, proves the point. *Markman* takes as its starting point the fact that there will often be reasonable, good-faith disagreements over the meaning of a claim term—there, the term "inventory," which could mean either cash receipts or a catalog of clothing. *Id.* at 375. Such ambiguity is the beginning of interpretation, however, not the end.

Markman teaches that ascertaining the precise meaning of a complex patent oftentimes requires a "sophisticated analysis." *Id.* at 389. The Court has provided various canons of construction to guide that analysis. The patent must be viewed from the perspective of a skilled artisan, who has a presumed familiarity with the prior art in the relevant field. *See Carnegie Steel Co. v. Cambria Iron Co.*, 185 U.S. 403, 437 (1902). The claim language at issue must be construed in light of the specification as a whole, as well as the other claims. *See Markman*, 517 U.S. at 389-90; *United States v. Adams*, 383 U.S. 39, 48-49 (1966); *Smith v. Snow*, 294 U.S. 1, 14 (1935). Statements made during prosecution may elucidate the meaning of

a claim term, *see Graham v. John Deere Co.*, 383 U.S. 1, 33 (1966), and expert testimony can provide insight into the understanding of a skilled artisan, *see Markman*, 517 U.S. at 389-90.

The ultimate goal of claim construction is to determine which party's proposed interpretation most "fully comports with the specification and claims and so will preserve the patent's internal coherence." *Id.* at 390. Because of the difficulty and subtlety of that process, *Markman* concluded that claim construction was a task better suited to a judge than a jury. *Id.* at 388-90. Indeed, *Markman* specifically reasoned that making judges the ultimate arbiters of ambiguous language would promote the interest in public notice. *Id.* Far from proscribing claims whose meaning is uncertain, the Court laid out a process for ascertaining meaning.[6] *Markman*'s

---

6. *Markman* explained that claim construction is often dispositive, noting that "[v]ictory in an infringement suit requires a finding that the patent claim covers the alleged infringer's product or process, which, in turn necessitates a determination of what the words in the claim mean." 517 U.S. at 374 (quotation marks omitted). This directly refutes Nautilus's suggestion that claim construction typically does not entail a determination of a claim's scope but rather merely how the claim can be explained to a lay jury. (*See* Pet'r Br. 46.) Quite to the contrary, "[t]he determination of the patent boundaries . . . is often the most important part of patent infringement litigation and is often case-dispositive." Thomas L. Creel, *Patent Claim Construction and Markman Hearings* § 1-1 (2013); *see also Markman v. Westview Instrument, Inc.*, 52 F.3d 967, 989 (Fed. Cir. 1995) (en banc) (Mayer, J., concurring) ("To decide what the claims mean is nearly always to decide the case."), *aff'd*, 517 U.S. 370 (1996); Rick McDermott, *Lessons Learned from Fifteen Years in the Trenches of Patent Litigation*, 14 Marq. Intell. Prop. L. Rev. 471, 473 (2010) ("A court's decision regarding the

assignment of claim construction to judges would have been an exercise in futility if, as Nautilus argues, a claim that is susceptible to more than one fair reading is invalid *ab initio*.

Indeed, since the genesis of distinct patent claims—over 100 years ago—the Court has recognized that ambiguity typically does not render a claim indefinite. The Court has frequently encountered claims amenable to more than one reasonable reading, and never once has it suggested that the presence of ambiguity raises invalidity concerns—a fact that is fatal to Nautilus's argument, as further detailed in Part II *infra*. *See, e.g.*, *Smith*, 294 U.S. at 14 ("[I]f the claim [is] fairly susceptible of two constructions, that should be adopted which will secure to the patentee his actual invention . . . ."); *McClain v. Ortmayer*, 141 U.S. 419, 425 (1891) (construing claim that was "fairly susceptible of two constructions"). Rather, when confronted with a claim whose meaning is subject to debate, the Court has endeavored to ascertain the meaning that maintains the internal coherence of the patent as a whole. *See, e.g.*, *Adams*, 383 U.S. at 48-49 (construing limitations of patented battery); *Ball & Socket Fastener Co. v. Kraetzer*, 150 U.S. 111, 117-18 (1893) (construing the claim term "hollow socket").

True ambiguity that claim construction cannot resolve is likely a rare situation. *Cf. Bank of Am. Nat'l Trust & Sav. Ass'n v. 203 N. LaSalle St. P'ship*, 526 U.S. 434, 461 (1999) (Thomas, J., concurring) ("A mere disagreement among litigants over the meaning of a statute does not

---

meaning of the claim terms often will be determinative of many, if not all, of the disputed issues in the case.").

[itself] prove ambiguity; it usually means that one of the litigants is simply wrong."). In the leading cases where this Court confronted claims with two apparent meanings, it has nearly always been able to resolve the true sense through study of the patent as a whole and the prosecution history. *See, e.g.*, *Markman*, 517 U.S. 370. These cases recognize that a claim need not provide perfect notice of its meaning so long as the meaning can be ascertained through claim construction.

B. The Substance Of The Federal Circuit's Test Was Correct.

The court of appeals applied the definiteness requirement in accordance with § 112. The court correctly stated that "[b]ecause claims delineate the patentee's right to exclude, the patent statute requires that the scope of the claims be sufficiently definite to inform the public of the bounds of the protected invention." (Pet. App. 13a.) It also recognized that a claim is invalid if "reasonable efforts at claim construction result in a definition that does not provide sufficient particularity and clarity to inform skilled artisans of the bounds of the claim." (*Id.*) The court then considered each of the interpretive guides that have been approved by this Court for claim construction. It reached a reasoned conclusion as to the meaning of the claim as a whole and rejected Nautilus's challenge that a skilled artisan would not understand the bounds of the invention. (*Id.* at 20a-21a.) Section 112 demands nothing further.

Contrary to Nautilus's characterization, the Federal Circuit's reasonableness test is far from toothless. That court often invalidates patents as indefinite because

they fail to provide reasonable notice of their boundaries to the public. Indeed, the Federal Circuit has found indefiniteness in a variety of circumstances. *See, e.g., Halliburton Energy Servs., Inc. v. M-I LLC*, 514 F.3d 1244 (Fed. Cir. 2008) (invalidating as indefinite claim involving "fragile gel" where specification provided no means of determining the claimed degree of fragility or distinguishing invention from prior art); *Datamize, LLC v. Plumtree Software, Inc.*, 417 F.3d 1342 (Fed. Cir. 2005) (holding indefinite a claim for display software with an "aesthetically pleasing look and feel," where there was no objective standard for that limitation); *Novo Indus., L.P. v. Micro Molds Corp.*, 350 F.3d 1348 (Fed. Cir. 2003) (invalidating claim with typographical error that could be rectified in several different, equally defensible ways); *Honeywell Int'l, Inc. v. Int'l Trade Comm'n*, 341 F.3d 1332 (Fed. Cir. 2003) (invalidating claim that failed to explain which of several possible measurement methods should be employed to arrive at numerical claim limitation).

Rather than address what the Federal Circuit actually *did*, Nautilus hinges its attack on a handful of phrases that the Federal Circuit *said*. Its main target is the lower court's use of the term "insolubly ambiguous" to describe a claim that fails the indefiniteness test. (Pet'r Br. 37-39.) But "insolubly ambiguous" is not a yardstick by which the Federal Circuit *measures* indefiniteness; it is the conclusory label that the court affixes to claims that it has *already* determined do not provide reasonable notice of an invention's bounds. The court has consistently equated "insolubly ambiguous" with the longer and more complete formula that the claim lacks reasonable clarity delineating its boundaries to one skilled in the art. *See* Pet. App. 13a; *see also Halliburton*, 514 F.3d at 1249 ("[C]laims

[are] held indefinite only where a person of ordinary skill in the art could not determine the bounds of the claims, *i.e., the claims were insolubly ambiguous.*") (emphasis added); *Star Scientific, Inc. v. R.J. Reynolds Tobacco Co.*, 537 F.3d 1357, 1371 (Fed. Cir. 2008). The "insolubly ambiguous" label should therefore be no more offensive than the word "indefinite," another convenient shorthand term that does not actually appear in the text of § 112.[7]

Nautilus also complains that the Federal Circuit will uphold the definiteness of a claim even when "reasonable persons" may disagree regarding its meaning, thereby supposedly indicating a willingness to preserve claims that have no objective meaning. (Pet'r Br. 37.) Again, Nautilus distorts the standard. The full statement from the Federal Circuit is: "*If the meaning of the claim is discernible*, even though the task may be formidable and the conclusion may be one over which reasonable persons will disagree," then the claim is definite. (Pet. App. 22a (emphasis added).) In other words, where the *true meaning* may be determined, then the fact that other interpretations are viable (but less persuasive) does not defeat validity. *Markman* itself proves that point by prescribing the process for resolving disputes in which reasonable but opposing interpretations are offered.

---

7. Similarly, Nautilus takes issue with the Federal Circuit's statement that a claim is indefinite if it is "not amenable to construction." (Pet'r Br. 37-38.) Nautilus complains that it is always possible to ascribe *some* meaning to a disputed term. (*Id.*) But the Federal Circuit is not talking about throwing darts; being "amenable to construction" means that the process of claim construction set out in *Markman* yields a single, best answer. Claims that contain subjective terms or lack guides to their application, by contrast, are not amenable to construction.

To be sure, the Federal Circuit has not always characterized its own tests in the clearest language, employing jargon that risks misinterpretation. But even though terms like "insolubly ambiguous" may not be felicitous, the substantive standard that the court actually applied here was correct and true to the meaning of § 112, ¶ 2. There is thus no need to "micromanag[e] the Federal Circuit's particular word choice" when its analysis is apt. *Warner-Jenkinson*, 520 U.S. at 40.

II. NAUTILUS'S PROPOSED TEST IS CONTRADICTED BY THIS COURT'S DECISIONS AND NOT SUPPORTED BY THE PATENT ACT.

Nautilus posits that when there is reasonable disagreement as to the scope of a patent claim, the claim should automatically be invalid for indefiniteness. The extreme and radical nature of that position cannot be understated. In Nautilus's world, if two judges have different readings of a claim term, then the patentee's property right is forfeited, however clear the actual disclosure of the invention and however clear the infringer's misappropriation. (Pet'r Br. 38, 47-50.) If an appeals court reverses a district court's construction of a term, then the claim is likewise invalid. (*Id.* at 49.) Even if two *litigants* take different stances on a question of interpretation—unless one reading is "outlandish" or "implausible" (*id.* at 46)—the claim is indefinite.

That cannot possibly be the correct standard. There is nothing in the text of the Patent Act that supports such a test, and no case from this Court or any other has ever embraced it. To the contrary, this Court's precedents

directly refute Nautilus's contention that a claim is *per se* invalid if it is subject to two possible "reasonable" interpretations.

A. Nautilus's Test Finds No Support In The Text Of § 112.

Nautilus relies heavily on a supposed plain-text reading of § 112, devoting the first five pages of its argument to proving its case with period dictionaries. According to Nautilus, "particularly point out" and "distinctly claim" mean that a patent claim's meaning must be "clear" and "plain," not "ambiguous" or "confused." (Pet'r Br. 25.) Therefore, Nautilus asserts, if there is more than one reasonable interpretation of a claim, it is invalid.

But one can accept Nautilus's proffered dictionary definitions without believing that they conveniently resolve the question posed in this case. The requirement that a patentee "particular[ly]" specify an invention dates back to the original 1790 Patent Act. *See* Act of Apr. 10, 1790, § 2. The Framers of that Act (and those of its successors) were undoubtedly familiar with the most famous particularity requirement in American law: the Fourth Amendment's directive that a search warrant must "particularly describ[e]" the target location, person, or objects. U.S. Const. amend. IV. In the Fourth Amendment context, this Court has made clear that the particularity requirement is satisfied by a "reasonably detailed warrant." *Maryland v. Garrison*, 480 U.S. 79, 89 n.14 (1987). For instance, a requesting officer need not describe items to be seized under the warrant with unflinching accuracy. *See Berger v. New York*, 388 U.S. 41, 99 (1967) (Harlan, J., dissenting).

Rather, it is "enough if the description is such that the officer can, with reasonable effort, ascertain and identify" the warrant's target. *Steele v. United States*, 267 U.S. 498, 503 (1925). That is to say, the touchstone of "particularity" is reasonable specificity. *Cf. Brigham City, Utah v. Stuart*, 547 U.S. 398, 403 (2006).[8]

"Distinctly claiming" has an even simpler meaning: the claims must be in a "distinct" section of the patent, i.e., separate from the written description and diagrams. *See Markman*, 517 U.S. at 373 (noting that there are "two distinct elements of a patent document": the specification and the claims). Prior to the Patent Act of 1870, patents were not required to have claims—just a written description of the invention. *See, e.g.*, Act of July 4, 1836, § 5. That description typically contained a detailed discussion of the prior art in order to contextualize the new invention. *Merrill v. Yeomans*, 94 U.S. 568, 570

8. As one of the amici notes (*see* Amicus Br. of Yahoo! 30-31), a modern-day example of this use of "particularly" appears in Fed. R. Civ. P. 9(b), which requires a party to allege fraud or mistake "with particularity." The purpose of the particularity requirement is to provide a defendant with "fair notice" of a fraud claim. *U.S. ex rel. Lemmon v. Envirocare of Utah, Inc.*, 614 F.3d 1163, 1172 (10th Cir. 2010). Significantly, courts have not read Rule 9(b) to require painstaking contentions that describe every aspect of the fraud with perfect clarity, but rather only to be "as short, plain, simple, direct, and concise as is reasonable under the circumstances." *Corwin v. Marney, Orton Inv.*, 788 F.2d 1063, 1068 (5th Cir. 1986) (quoting 5 C. Wright & A. Miller, Federal Practice and Procedure § 1291 at 389 (1969)). Indeed, this Court has recognized that Rule 9(b) merely requires "greater" particularity in pleading, not perfect particularity. *Leatherman v. Tarrant Cnty. Narcotics Intelligence and Coordination Unit*, 507 U.S. 163, 168 (1993).

(1876). Thus, it was difficult to ascertain from the written description exactly what was novel in a given invention. *See id.* The 1870 Act for the first time required the applicant to append "a *distinct* and specific statement" of what he claimed to be new—the claims—and that "*distinct* and formal" section became of primary importance in defining the scope of the patent. *Id.* (emphases added).

Nautilus may therefore be correct that "distinctly" generally means "having the difference marked," "so separated as not to be confounded with any other thing," and "without a blending or merging of one thing with another." (*See* Pet'r Br. 24-25.) But in the context of § 112, that merely means that the claims must follow the specification.

Nautilus's resort to 35 U.S.C. § 162 also fails. (*See* Pet'r Br. 26.) That provision loosens § 112's written description requirement for plant patents. *See* 35 U.S.C. § 162 ("No plant patent shall be declared invalid for noncompliance with section 112 if the *description* is as complete as is reasonably possible." (emphasis added)). As this Court has explained, one of the primary rationales behind § 162 is that plants are not amenable to the requirement that the inventor describe how to produce the invention. *J.E.M. Ag Supply, Inc. v. Pioneer Hi-Bred Int'l, Inc.*, 534 U.S. 124, 134 (2001). Therefore, inventors are required only to deposit seeds of their new plant variety to show their innovation. However, an applicant still bears the burden of "clearly and precisely describing those characteristics which define the new variety." *In re Greer*, 484 F.2d 488, 491 (C.C.P.A. 1973); *see also* S. Rep. No. 71-135, at 4-5 (1930). Since § 162 is silent on the definiteness requirement, it has no bearing on this case.

B. This Court's Precedents Refute Nautilus's Test.

1. Nautilus contends that a rule against patent claims allegedly open to more than one reading is supported by this Court's decisions. But there is an entire body of case law, stretching back over 100 years, that directly refutes Nautilus's argument. Those cases are *stare decisis* and they control the result here.

The Court has held that "if the claim [is] fairly susceptible of two constructions, that should be adopted which will secure to the patentee his actual invention, *rather than to adopt a construction fatal to the grant.*" *Smith*, 294 U.S. at 14 (emphasis added); *accord Coupe v. Royer*, 155 U.S. 565, 577 (1895); *Keystone Mfg. Co. v. Adams*, 151 U.S. 139, 144-45 (1894); *McClain*, 141 U.S. at 425 ("[I]n a case of doubt, where the claim is fairly susceptible of two constructions, that one will be adopted which will preserve to the patentee his actual invention.").[9] Although *Smith* did not directly address indefiniteness, the rule it states necessarily precludes Nautilus's proposed test. It would be nonsensical to save a claim from invalidity by adopting the narrower of two readings, only to have the very act of acknowledging the two readings cause the claim to founder immediately on indefiniteness.

In *Keystone Manufacturing*, 151 U.S. 139 (1894), which involved a new type of cornsheller that the accused infringer alleged was anticipated by two earlier patents,

---

9. Although these cases were decided under the former 35 U.S.C. § 33, the precursor to § 112, ¶ 2, "the 1952 Patent Act is not materially different from the 1870 Act with regard to claiming, reissue, and the role of the PTO." *Warner-Jenkinson*, 520 U.S. at 26.

the Court conceded that both of the earlier patents "describe mechanical contrivances closely resembling the invention in question," and that it was not "easy to point out what it is that distinguishes [the] new and successful machine from [the] old and ineffectual one." *Id.* at 144. Despite that difficulty, the Court rejected a construction that would be "fatal to the grant" because it would be anticipated by the prior art. *Id.* at 145. Obviously, the claim in *Keystone Manufacturing* was open to more than one construction; yet the Court upheld the patent.

These decisions grow out of the venerable doctrine that the law abhors forfeitures, which "are often the means of great oppression and injustice." *Knickerbocker Life Ins. Co. v. Norton*, 96 U.S. 234, 242 (1877). In the interpretation of contracts, leases, sales of property, and many other areas of law, rules that cause one party to lose all of its legal rights or financial interests are highly disfavored. *See generally* 8 Corbin on Contracts § 39.10 (2006). Patent law is no different. In one of the earliest American cases invoking this principle, involving a new means for producing friction-based matches that was alleged to be "vague and indefinite," Justice Story stated it to be a "clear rule of our law in favor of inventors" "to give a liberal construction to the language of all patents and specifications . . . so as to protect, and not to destroy the rights of real inventors." *Ryan v. Goodwin*, 21 F. Cas. 110, 111-12 (C.C.D. Mass. 1839) (No. 12,186). Two centuries later, the doctrine is still followed in the Federal Circuit. *See, e.g., Liebel-Flarsheim v. Medrad, Inc.*, 358 F.3d 898, 911 (Fed. Cir. 2004); *accord Halliburton*, 514 F.3d at 1253–54.

This Court's cases expressly refute Nautilus's contention that if two reasonable persons disagree over the meaning of a patent claim, then the patent must be invalid. In *Merrill*, a case Nautilus cites in support (Pet'r Br. 32, 35), the Court considered whether the term "manufacture" in a patent for a new type of hydrocarbon oil referred to the process for producing the oil or to the product itself. 94 U.S. at 569. The Court acknowledged that the word is "used with equal propriety" to express either one. *Id.* at 570-71. Based on other language in the specification, the majority concluded that only the process was claimed. *Id.* at 573. The dissent disagreed, contending that the proper construction of the claim encompassed the product. *Id.* at 574 (Clifford, J., dissenting). But no one ventured that the patent was invalid just because there was a reasonable disagreement among the parties and among the *Members of this Court* regarding the proper construction of the term. To the contrary, the majority expressly invoked the savings principle, stating that "rather than defeat a patent where it appears that a valuable invention has really been made," the Court "will uphold that which was really invented, and which comes within *any fair interpretation* of the patentee's assertion of claim." *Id.* at 572-73 (emphasis added).

Contrary to Nautilus's assertion, it is entirely routine for the Court to construe patents even when there are reasonable disputes as to their meaning. *See, e.g., Adams*, 383 U.S. at 48-49 (patent for a water-based battery, where the claims never referred to water); *Universal Oil Prods. Co. v. Globe Oil & Refining Co.*, 322 U.S. 471, 480-85 (1944) (construing contested claim term "without substantial vaporization"); *Ball & Socket Fastener Co.*, 150 U.S. 111 (construing contested claim term "hollow socket");

White v. Dunbar, 119 U.S. 47 (1886) (upholding patent despite fact that patentee had proffered an alternative but incorrect construction that it could not credibly argue was unreasonable); *Keystone Bridge Co. v. Phoenix Iron Co.*, 95 U.S. 274, 275-79 (1877) (construing contested claim term "wide and thin bars"). Indeed, Nautilus's extreme theory is also inconsistent with *Markman*. There, the Court explained that claims with competing interpretations are to be construed by judges, not invalidated *ab initio*. *See* 517 U.S. at 374-91.

2. Tellingly, while Nautilus cites a number of cases concerning indefiniteness, *not one* involves a situation where a claim is held indefinite merely because two reasonable constructions are possible. Indeed, the two cases that Nautilus relies on most heavily involve the very different and far more egregious situation in which the patent claims a novel function but does not incorporate an adequate description of the structure that will produce that function. That type of claim is indefinite because it fails to provide any guidance to a person skilled in the art as to the metes and bounds of the invention—not because it is amenable to two "reasonable" interpretations.

In *General Electric Co. v. Wabash Appliance Corp.*, 304 U.S. 364 (1938), the Court held indefinite claims to certain tungsten light bulb filaments. In the prior art, tungsten filaments had suffered from problems known as "offsetting" and "sagging" that reduced the efficiency and life of the bulb. *Id.* at 366. The patent-in-suit claimed a filament composed of "comparatively large [tungsten] grains of such size and contour as to prevent substantial sagging and offsetting," *id.* at 368, but it gave no indication *which* size or contour would produce those results. The

Court held the claim invalid because the grains were meant to be the heart of the invention, but the patent disclosed no meaningful information about them. The Court contrasted that situation with an acceptable use of functional limitations where—as with the '753 patent—the claims "accurately define the essential qualities of a product to one skilled in the art." *Id.* at 371.[10]

Similarly, in *United Carbon Co.*, the patent concerned a form of carbon black (an ingredient in automobile tires and carbon paper) described as "substantially pure" with "comparatively small, rounded, smooth aggregates" and a "spongy or porous interior." 317 U.S. at 231. Not only were those adjectives undefined in the patent, but evidence submitted by the patentee indicated that the claims were "but inaccurate suggestions of the functions of the product." *Id.* at 233. For example, the patentee testified that the claim term "commercially uniform" meant only "the degree of uniformity demanded by buyers." *Id.* The Court noted that claims need only be "*reasonably* clearcut" to satisfy the statute, *id.* at 236 (emphasis added), but it found even that standard unsatisfied, *id.* at

---

10. The claims of the '753 patent are readily distinguishable from those found indefinite in *General Electric*. There, the claims and specification provided no structural description of the grains that purportedly carried out the novel function. Here, by contrast, the patent explains that electrodes equalizing the EMG signals from both hands and a difference amplifier can be employed to achieve the desired result of cancelling EMG noise. While the specification does not limn the precise electrode configuration that will equalize the EMG signals, there was uncontested evidence that a person skilled in the art could determine that configuration with minimal effort, and proof that it had been done. (*See* J.A. 160-61.)

237. As in *General Electric*, the problem was that a person skilled in the art would have no basis to determine what type of material was covered by the claims.

Nautilus recognizes that these cases stand for the principle that a claim is indefinite if it describes the invention "based only on the outcome it accomplishes, without delineating a particular structure by which his invention achieves that outcome." (Pet'r Br. 36.) But Nautilus fails to draw out the implications of that understanding—namely, that neither *General Electric* nor *United Carbon* "closely resemble" this case at all. (Pet'r Br. 50-51.) Those cases did not involve claims allegedly susceptible to more than one reading. They were concerned with the much more serious, and dissimilar, problem where the patent utterly fails to disclose what the invention *is*.

C. Nautilus's Test Misapprehends The Role Of The PTO.

Nautilus argues that the PTO's approach to reviewing patent applications supports its proposed test for definiteness. (*See* Pet'r Br. 45.) According to its own internal guidelines, the PTO will reject a claim containing language "such that a person of ordinary skill in the relevant art would read it with more than one reasonable interpretation." U.S. Patent & Trademark Office, *Manual of Patent Examining Procedure* § 2173.02(I) (rev. ed. 2012) ("MPEP"). According to Nautilus, that is the standard that courts should apply as well. But Nautilus overlooks the fundamental differences between the roles of the PTO and the courts. The PTO's test is not mandated by § 112, and it would be inappropriate for a court to implement.

The PTO has no formal rulemaking authority, and is empowered only to develop procedural rules for its own internal processes. *See* 35 U.S.C. § 2(b)(2). The PTO's test for definiteness is therefore not a formal interpretation of the Patent Act's requirements. Instead, it serves the PTO's mission of encouraging that patents be of the highest quality attainable. *See* MPEP § 2173 ("[I]ssuing patents with clear and definite claim language is a key component to enhancing the quality of patents and raising confidence in the patent process."); *Supplementary Examination Guidelines for Determining Compliance With 35 U.S.C. 112 and for Treatment of Related Issues in Patent Applications*, 76 Fed. Reg. 7162, 7163 (2011) (*PTO Definiteness Guidelines*); *see also In re Buszard*, 504 F.3d 1364, 1366-67 (Fed. Cir. 2007).

Toward that end, the PTO follows a distinctive approach to reviewing patent applications. First, the PTO gives every claim the broadest reasonable reading possible, not necessarily the reading that most fully comports with the patent as a whole. MPEP § 2173.01(I). Second, if, on that broadest reading, there could be any disagreement as to the bounds of the claim, the examiner will issue a rejection, inviting the applicant to amend the claims or explain their meaning. *Id.* § 2173.02(I). The goal of the two-step process is to ferret out any possible lack of clarity, even if that hint of confusion would be resolved after a more concerted effort at claim construction.

The PTO's lower threshold for definiteness is appropriate and fair to the applicant because during prosecution, the patent record is in development and not fixed. *PTO Definiteness Guidelines*, 76 Fed. Reg. at 7164. Thus, "[an] applicant has the ability to provide explanation

and/or amend the claims to ensure that the meaning of the language is clear and definite prior to issuance." MPEP § 2173.02(I). "[T]he patent examiner and the applicant, in the give and take of rejection and response, work toward defining the metes and bounds of the invention to be patented." *Buszard*, 504 F.3d at 1366-67.

Courts have a completely different function in the patent system. They are tasked with interpreting claims presented at infringement trials, long after the window for ameliorating the patent has closed. *See Markman*, 517 U.S. at 388-91. At that stage, all that a court can do is uphold the patent or invalidate it for indefiniteness. Accordingly, rather than set the bar at some aspirational level of clarity, the court must ask whether the patent as written meets the actual statutory standard for definiteness. If it does, then the definiteness inquiry is complete, regardless of whether the claim could arguably express its limits more precisely.[11]

D. Nautilus's Policy Arguments Are Off-Base And Irrelevant.

Having little precedent to anchor its proposed test for indefiniteness, Nautilus instead relies on policy

---

11. In any event, even the PTO does not apply the definiteness test to the extreme degree that Nautilus proposes. In the very same section that sets out the PTO's methodology, the Manual states: "When the examiner is satisfied that patentable subject matter is disclosed . . . he or she should allow claims which define the patentable subject matter with a *reasonable* degree of particularity and distinctness." MPEP § 2173.02(II) (emphasis in original). It is exceedingly difficult to reconcile that statement with Nautilus's proposal.

suppositions about the deficiencies of the patent system and how they could be cured by a judicial strengthening of the definiteness requirement. Putting to one side that recourse to policy considerations is improper when the meaning of a statute is clear, *United States v. Tohono O'Odham Nation*, 131 S. Ct. 1723, 1731 (2011), policy rationales do not support the adoption of Nautilus's test even on their own merits.

1. Nautilus and its amici profess great concern that without their extreme form of the no-ambiguity standard, patent holders will be incentivized to draft claims in a deliberately ambiguous fashion. (Pet'r Br. 31-32.) That fear is highly speculative and exaggerated. Competent attorneys do not deliberately draft ambiguous claims. *See, e.g.*, Robert C. Faber, *Faber on Mechanics of Patent Claim Drafting* § 10:8:1, at 10-46 (6th ed. 2013) ("[I]t is important to recognize that claim language must be extremely precise."); Stephen A. Becker, *Patent Applications Handbook* § 2:9 (2013) ("Language in the claim should not enable more than one interpretation of the claim to be reasonably made."); Joseph E. Root, *Rules of Patent Drafting* 292-93 (2011) ("Avoid contextual ambiguity by concretely defining the bounds of the claim."). For one thing, the goal of patent drafting is to claim as *broad* an invention as possible, and an ambiguous claim risks being construed *narrowly*, which would make the whole effort self-defeating. Whatever the conventional wisdom, there is little evidence that patent drafters are actually pursuing a strategy of deliberately injecting ambiguity into claim language, or that the strategy would succeed even if they did. *See* Tun-Jen Chiang & Lawrence B. Solum, *The Interpretation-Construction Distinction in Patent Law*, 123 Yale L.J. 530, 591-92 (2013).

Closely related is Nautilus's argument that the inventor should bear any risk of ambiguity, as he knows his invention best and is in the best position to draft claims clearly. (Pet'r Br. 44.) Some amici argue that such a rule would lead to more economically efficient outcomes, as the drafter is the so-called "cheapest cost avoider." (Amicus Br. of Microsoft Corp. 6-11.) In so arguing, those amici simply discount acknowledged problems about the imprecision of language or the difficulty of reducing inventions to precise claim elements. More important, their analysis begs the main question. The issue is not whether such a rule would motivate clearer drafting; it is whether imposing a penalty of patent *invalidation* is the most socially efficient result. A rule that if a term is unclear, the inventor loses all of his intellectual property rights, "does not serve any policy of patent law." *Smithkline Beecham Corp. v. Apotex Corp.*, 247 F. Supp. 2d 1011 (N.D. Ill. 2003) (Posner, J., sitting by designation).

2. Whatever effect it would have on claim drafting, Nautilus's test for definiteness would destroy the "delicate balance" that Congress has fashioned between rewarding inventors and encouraging the public to develop new innovations. *See Festo*, 535 U.S. at 731; *Bonito Boats*, 489 U.S. at 150-51; *see also* Federal Trade Commission, *The Evolving IP Marketplace: Aligning Patent Notice and Remedies with Competition* 93 (2011) ("[R]equiring great precision when evaluating claim definiteness . . . might give third parties better notice but may not fully protect all that applicants have invented."). As noted by several neutral amici, few patents possess the crystalline clarity that Nautilus demands, and thus the practical result of Nautilus's test would likely be mass invalidation. (*See, e.g.*, Amicus Br. of Am. Bar Ass'n ("ABA") 18; Amicus

Br. of Am. Intellectual Prop. Law Ass'n 12.) "Lawyers may create a 'dispute' about any word," *Senmed, Inc. v. Richard-Allan Med. Indus., Inc.*, 888 F.2d 815, 819 n.8 (Fed. Cir. 1989) (Markey, C.J.), and on Nautilus's formulation, the mere existence of a dispute over diction somewhere within a patent claim is sufficient to invalidate that claim.

Moreover, far from curbing patent litigation, Nautilus's test would multiply it. It is not a difficult task to devise an interpretation just short of "outlandish." (Pet'r Br. 46.) A party that is sued for infringement would have the incentive to challenge the precision of *every* term and limitation in the claim at issue, including those within limitations that the infringer indisputably practices. (*See* ABA Br. 20 n.9.) In turn, the court would be required to construe every such disputed term and determine whether the disagreement over the construction was "reasonable." Patent litigation would become both more prevalent and more labored.

Finally, there can be no question that such a test would disrupt the "settled expectations of the inventing community." *Festo*, 535 U.S. at 739. Patents that were issued years earlier, after being screened for indefiniteness by the PTO, would be perpetually at risk of invalidation by challengers motivated to find (or at least assert) arguments about uncertainty, even if they are only arguments dreamed up by lawyers.

3. Regardless of the merits of the policy considerations raised by Nautilus and its amici, "[t]he responsibility for changing [settled patent law] rests with Congress." *Id.* at 739; *see also Microsoft Corp. v. i4i Ltd. P'ship*, 131 S.

Ct. 2238, 2252 (2011); *Warner-Jenkinson*, 520 U.S. at 28 (stating that policy arguments for overturning doctrine of equivalents are "best addressed to Congress, not this Court"). Both this Court and the Federal Circuit have used a reasonable-notice standard to measure definiteness for decades, and Congress has never intervened. In particular, the recent America Invents Act ("AIA"), which was passed in part to improve patent quality, did not tinker with § 112's notice requirements. *See* Pub. L. No. 112-29 (Sept. 16, 2011). In passing the AIA, Congress also rejected a proposal to publicize patent applications at the time of filing, thus signaling that "fair notice is, in its view, a subordinate goal to other purposes of the patent statute." Robert C. Kahrl, *Patent Claim Construction* § 10.01, at 10-5 (2013).

Congress did choose other means to improve patent quality, however, such as adding avenues for reexamination at the PTO. The AIA both implemented a post-grant review process, Pub. L. No. 112-29, § 6(d), and vastly expanded the scope of *inter partes* review, *id.* § 6(a). During a post-grant review, a party can challenge the definiteness of a patent. *See* 35 U.S.C. §§ 282(b)(3), 321(b). To succeed, the challenger need only show indefiniteness to a preponderance of the evidence. *See id.* § 326(e). These new reexamination procedures have allowed challengers to weed out improvidently granted patents. *See, e.g.*, Tony Dutra, *PTAB's Latest Decisions on Merits Include One Set of Claims Upheld, No Amendments*, 87 PTCJ 1010 (Mar. 3, 2014). Evidently, Congress preferred to create additional processes to address concerns about patent quality rather than alter the standard embedded in § 112, ¶ 2. The Court should follow Congress's lead. *See Festo*, 535 U.S. at 739; *see also i4i*, 131 S. Ct. at 2252; *J.E.M.*

Ag Supply, 534 U.S. at 145-46 (declining to narrow longstanding interpretation of 35 U.S.C. § 101 "where Congress has given us no indication that it intends this result").

III. THE '753 PATENT IS DEFINITE.

Regardless of which standard for assessing definiteness is correct, there is nothing indefinite about the term "spaced relationship" or Claim 1 as a whole. There is no indication that anyone was confused about the bounds of the claim—certainly not Nautilus or its predecessor. And there was no disagreement between the majority and concurrence below about any substantive question of claim construction. However the Court decides the standard, the Federal Circuit's decision rejecting Nautilus's indefiniteness challenge should be upheld.

A. The Meaning Of Claim 1 Is Unambiguous When Viewed In Light Of The Customary Tools Of Claim Construction.

The district court mistakenly thought that the term "spaced relationship" was indefinite because it did not set forth the exact distance within each pair of electrodes. That was plainly wrong. The range of possible spacing between the electrodes is clear. The language of the claim itself, the diagrams, and the specification all demonstrate that the electrodes on each side must be distinct—i.e., have a greater-than-zero distance separating them—but cannot be more than a hand's width apart (so as to permit a hand to "contact[]" both simultaneously, *see* J.A. 62). No greater precision is needed, and no greater precision is possible. As undisputed expert testimony explained, the

correct spacing would depend on the physical attributes of the electrodes themselves as well as of the apparatus on which those electrodes were mounted. As in *Eibel Process*, *Minerals Separation*, and *Carnegie Steel*, a claim is not indefinite merely because some aspects of the invention are left to the "skill of the persons applying the invention." *Minerals Separation*, 242 U.S. at 271.

To be sure, "spaced relationship" may be somewhat broad in that it encompasses a (circumscribed) range of distances. But "[b]readth of a claim is not to be equated with indefiniteness." MPEP § 2173.04. There is nothing unclear about what a "spaced relationship" encompasses.[12] And just as Claim 1 need not specify the precise length of the elongate member, nor its color or composition, it need not limit itself to one size spacing between electrodes.

B. There Is No Meaningful Difference In Interpretation Between The Majority Opinion And The Concurrence Below.

Nautilus argues that "the Federal Circuit majority and concurrence adopted very different readings of key claim language" and therefore had "different understandings of the claims' scope." (Pet'r Br. 48.) Those purportedly divergent constructions, in Nautilus's view, demonstrate

---

12. Nor is there anything unusual about the term "spaced relationship." It has appeared in the claims of thousands of patents issued since 1976. (See *Results of Search in U.S. Patent Collection for "spaced relationship" in Claims of Issued Patents from 1976-present*, Query ACLM/"spaced relationship" at http://patft.uspto.gov/netahtml/PTO/search-adv.htm, USPTO PATENT FULL-TEXT AND IMAGE DATABASE; *see also* Amicus Br. Of Intellectual Prop. Law Ass'n of Chicago at 18.)

that the '753 patent is indefinite. But any asserted difference is a manufactured fiction. There is nothing in the language or the logic of the opinions indicating that they disagreed in any material way about the boundaries of the property right claimed.

First, it is not apparent that the concurrence was expressing *any* view about the meaning of "spaced relationship"—much less a view that conflicted with the majority's. In the concurrence's assessment, the procedural posture of the appeal limited the issues at stake. (Pet. App. 31a-32a.) The district court had decided that the correct construction of "spaced relationship" was purely a spatial relationship, and Nautilus did not appeal that construction. (*Id.*) Hence, in the concurrence's view, the only question before the Federal Circuit was whether *that unchallenged construction* was definite. (*Id.* at 30a-31a.) Given the "inherent parameters" that the distance between the electrodes had to be greater than zero but less than a hand's breadth, definiteness was clearly satisfied. (*Id.*) To the concurrence, any other issue "is not currently before us." (*Id.* at 32a.)

Second, even if the concurrence could be read as offering (or implicitly approving) a construction of "spaced relationship," there is no indication that the majority and the concurrence disagreed over the meaning of Claim 1 *as a whole*. *Both* agreed that the distance within each pair of electrodes had to be somewhere between zero and a hand's breadth. (Pet. App. 16a, 31a.) And both presumably would have agreed—if the concurrence had proceeded to construe the remainder of Claim 1—that the overall effect of the electrode configuration was to allow the EMG signals to be cancelled out and the ECG signals to

be amplified. The only difference one can glean is that the majority thought the term "spaced relationship" referred to *both* the spatial distance *and* the functional limitation, while the concurrence thought "spaced relationship" referred *only* to the spatial distance because a different element of Claim 1 referred to the functional limitation.

That is a quintessential distinction without a difference. The test for definiteness is whether a claim *as a whole*, not its individual elements, provides reasonable notice to the public of its bounds. *See* 35 U.S.C. § 112, ¶ 2 (stating that the "*claims*" must particularly point out and distinctly claim the invention (emphasis added)); *S3 Inc. v. NVIDIA Corp.*, 259 F.3d 1364, 1367 (Fed. Cir. 2001) ("If the claims when read in light of the specification reasonably apprise those skilled in the art of the scope of the invention, § 112 demands no more.") (citation omitted). Hence, it is irrelevant whether one set of words or another within the same claim express a particular limitation. The overall metes and bounds are exactly the same.

Nautilus contends, however, that there is one difference. According to Nautilus, if the EMG-cancelling function depends on the electrode configuration, then inventors would be free to develop monitors that cancel EMGs by means of something other than the electrode configuration—e.g., by additional circuitry. On the other hand, if the EMG-cancelling function is not linked to the electrode configuration, then an inventor would be precluded from developing any monitor that cancels EMGs so long as it has spaced electrodes.

The hypothetical distinction proposed by Nautilus is of no moment in the context of the claim taken as a

whole. By its plain terms, Claim 1 encompasses only heart monitors that cancel EMG signals by "detect[ing]" equal EMGs at two sets of electrodes and then neutralizing those congruent signals in a difference amplifier. (J.A. 62.) Employing additional circuitry or other means to cancel EMGs is plainly beyond the claim's scope, as both the Federal Circuit majority and concurrence would agree.

C. In Light Of The Presumption Of Validity, Nautilus's Failure To Make An Evidentiary Showing That The Claim Is Unclear Further Dooms Its Indefiniteness Challenge.

The Patent Act provides that "[a] patent" and "[e]ach claim of a patent . . . shall be presumed valid," and that the "burden of establishing invalidity of a patent or any claim thereof shall rest on the party asserting such invalidity." 35 U.S.C. § 282. This "presumption of validity" not only places the burden of persuasion on the party lodging an invalidity challenge but also prescribes the heft of that burden. *See i4i*, 131 S. Ct. at 2247-48. Among other things, the accused infringer must prove invalidity clearly and convincingly, and all reasonable inferences will be resolved in favor of validity. *Id.*; *Radio Corp. of Am. v. Radio Eng'g Labs., Inc.*, 293 U.S. 1, 2 (1934).

In bringing its indefiniteness challenge, Nautilus has plainly not met this burden. Nautilus has not only failed to prove indefiniteness clearly and convincingly, it has failed to present *any evidence whatsoever* in support of its position. Nor has it proffered any evidence to rebut Biosig's expert testimony, which points inexorably to the conclusion that the claim at issue is definite. Given that all reasonable inferences must be made in favor of validity,

Radio Corp., 293 U.S. at 2, Nautilus's evidentiary failure alone should have been fatal to its summary judgment motion for indefiniteness.

Nautilus seeks to circumvent the presumption by arguing that it has no application to a validity challenge based on indefiniteness, which is a purely legal question as to which § 282 is "irrelevant." (Pet'r Br. 41.) But that position is wrong. Definiteness is measured from the viewpoint of a person skilled in art at the time the patent was filed. *See, e.g., Eibel Process*, 261 U.S. at 65; *Carnegie Steel*, 185 U.S. at 437. Adjudging definiteness thus requires determining factors such as the relevant art and the level of technical expertise and knowledge common at the time. *See* MPEP § 2173.02(II). All of those predicate determinations are fact-laden. *See Graham*, 383 U.S. at 17.

Indefiniteness is therefore no different from obviousness, priority of invention, the on-sale bar, and other questions of law that have factual underpinnings. *See Hamilton Beach Brands, Inc. v. Sunbeam Prods., Inc.*, 726 F.3d 1370, 1375 (Fed. Cir. 2013) (describing on-sale bar as question of law with underlying factual issues); *Singh v. Brake*, 317 F.3d 1334, 1340 (Fed. Cir. 2003) (same for priority of invention). Critically, "[w]hile the ultimate question of patent validity is one of law, . . . the same factual questions underlying the PTO's original examination of a patent application will also bear on an invalidity defense in an infringement action." *i4i*, 131 S. Ct. at 2242-43 (internal quotes and citations omitted). Accordingly, just as the presumption of validity demands deference to the PTO when a patent is challenged on grounds of obviousness, *see KSR Int'l Co. v. Teleflex Inc.*, 550 U.S. 398, 426 (2007),

priority of invention, *see Radio Corp.*, 293 U.S. at 13-14, or the on-sale bar, *see i4i*, 131 S. Ct. at 2242, so too should a court accord respect to the PTO's finding of definiteness.

Applying the presumption of validity in the definiteness context recognizes the PTO's special expertise in patent issues. *See KSR*, 550 U.S. at 426. Determining how a person skilled in the art would read a patent—and specifically whether a claim is sufficiently clear to such a person—typically requires a facility with technical aspects of patents. The PTO also has the institutional advantage that it conducts its inquiry into the knowledge of a skilled artisan at the actual time of filing, which is the legally pertinent time. A court looking back years later, conversely, must endeavor to reconstruct a prior level of expertise—no small task. A court is also likely to be unduly biased by ambiguities that arose after filing due to developments in language and technology. The PTO is thus better positioned than a court to make a correct finding on definitiveness, and its findings should be afforded respect by a court.

For all of these reasons, courts should presume that the PTO properly has "done its job" when it finds a patent definite. *i4i*, 131 S. Ct. at 2243. While Nautilus has failed to establish indefiniteness even in the absence of the presumption of validity, the presumption further undermines Nautilus's position. Nautilus has failed to prove indefiniteness, and it is beyond cavil that it has not tendered clear and convincing evidence.

CONCLUSION

For the foregoing reasons, the decision of the Federal Circuit should be affirmed.

March 26, 2014

Respectfully submitted,

SEAN M. HANDLER
DANIEL C. MULVENY
KESSLER, TOPAZ,
MELTZER & CHECK LLP
280 King of Prussia Road
Radnor, PA 19087
610-667-7706

MARK D. HARRIS
Counsel of Record
JAMES H. SHALEK
CELIA V. COHEN
PROSKAUER ROSE LLP
Eleven Times Square
New York, NY 10036
212-969-3000
mharris@proskauer.com

STEVEN M. BAUER
JOHN E. ROBERTS
ANTHONY H. CATALDO
JINNIE REED
PROSKAUER ROSE LLP
One International Place
Boston, MA 02110
617-526-9600

Counsel for Respondent

REPLY BRIEF

RECORD
AND
BRIEFS

No. 13-369

Supreme Court, U.S.
FILED
APR 14 2014
OFFICE OF THE CLERK

IN THE
Supreme Court of the United States

NAUTILUS, INC.,

Petitioner,

v.

BIOSIG INSTRUMENTS, INC.,

Respondent.

On Writ Of Certiorari
To The United States Court Of Appeals
For The Federal Circuit

REPLY BRIEF FOR PETITIONER

THOMAS G. HUNGAR
MATTHEW D. MCGILL
JONATHAN C. BOND
GIBSON, DUNN & CRUTCHER LLP
1050 Connecticut Avenue, N.W.
Washington, D.C. 20036
(202) 955-8500

JAMES E. GERINGER
JEFFREY S. LOVE
JOHN D. VANDENBERG
Counsel of Record
PHILIP WARRICK
KLARQUIST SPARKMAN, LLP
One World Trade Center
Suite 1600
121 S.W. Salmon Street
Portland, OR 97204
(503) 595-5300
john.vandenberg@klarquist.com

Counsel for Petitioner

Library of Congress
Law Library

RULE 29.6 STATEMENT

The corporate-disclosure statement included in the Brief for Petitioner remains accurate.

TABLE OF CONTENTS

Page

REPLY BRIEF FOR PETITIONER 1

ARGUMENT 3

I. SECTION 112 REQUIRES CLAIMS' SCOPE TO BE REASONABLY CERTAIN AND FORECLOSES THE "INSOLUBLY AMBIGUOUS" TEST 3

II. A CLAIM'S SCOPE IS NOT REASONABLY CERTAIN IF IT IS SUSCEPTIBLE, IN CONTEXT, OF MORE THAN ONE REASONABLE READING 6

A. PERMITTING AMBIGUOUS CLAIMS FLOUTS SECTION 112'S TEXT AND PURPOSES 7

B. THE PRESUMPTION OF VALIDITY DOES NOT ALTER THE DEFINITENESS STANDARD 11

C. THIS COURT'S PRECEDENT DOES NOT SUPPORT ALLOWING AMBIGUOUS CLAIMS 12

D. FAITHFULLY ENFORCING SECTION 112 BY ITS TERMS WOULD IMPROVE, NOT HARM, THE PATENT SYSTEM 17

III. THE SCOPE OF BIOSIG'S CLAIMS IS NOT REASONABLY CERTAIN 18

A. BIOSIG'S CLAIMS ARE SUSCEPTIBLE OF MULTIPLE REASONABLE INTERPRETATIONS 19

B. BIOSIG'S CLAIMS IMPROPERLY DEFINE THE INVENTION BY ITS FUNCTION UNTETHERED TO ANY DEFINED STRUCTURE 21

C. NAUTILUS PRESENTED THE BEST EVIDENCE OF INDEFINITENESS 22

CONCLUSION 23

TABLE OF AUTHORITIES

Page(s)

CASES

Ball & Socket Fastener Co. v. *Kraetzer*,
150 U.S. 111 (1893) 14

Carnegie Steel Co. v. *Cambria Iron Co.*,
185 U.S. 403 (1902) 13

Coupe v. *Royer*,
155 U.S. 565 (1895) 16

Datamize, LLC v. *Plumtree Software, Inc.*,
417 F.3d 1342 (Fed. Cir. 2005) 4

Eibel Process Co. v. *Minn. & Ontario Paper Co.*,
261 U.S. 45 (1923) 13

Gen. Elec. Co. v. *Wabash Appliance Corp.*,
304 U.S. 364 (1938) 9, 11, 13, 18, 21, 22

Hearing Components, Inc. v. *Shure Inc.*,
600 F.3d 1357 (Fed. Cir. 2010) 4

Keystone Bridge Co. v. *Phoenix Iron Co.*,
95 U.S. 274 (1877) 14

Keystone Mfg. Co. v. *Adams*,
151 U.S. 139 (1894) 15

Markman v. *Westview Instruments, Inc.*,
517 U.S. 370 (1996) 12, 14

McClain v. *Ortmayer*,
141 U.S. 419 (1891) 16

Merrill v. *Yeomans*,
94 U.S. 568 (1877) 2, 14

Milner v. *Dep't of Navy*,
131 S. Ct. 1259 (2011) 8

Minerals Separation, Ltd. v. *Hyde*,
242 U.S. 261 (1916) 14

Smith v. *Snow*,
294 U.S. 1 (1935) 15, 16

United Carbon Co. v. *Binney & Smith Co.*,
317 U.S. 228 (1942) 9, 12, 20, 21, 22

United States v. *Adams*,
383 U.S. 39 (1966) 14, 15

United States v. *Tohono O'Odham Nation*,
131 S. Ct. 1723 (2011) 17

Universal Oil Prods. Co. v. *Globe Oil & Ref. Co.*,
322 U.S. 471 (1944) 8, 14

Warner-Jenkinson Co. v. *Hilton Davis Chem. Co.*,
520 U.S. 17 (1997) 16

White v. *Dunbar*,
119 U.S. 47 (1886) 10, 14

STATUTES

35 U.S.C. § 101 11

35 U.S.C. § 112 (2011) 3, 5, 8

35 U.S.C. § 251 11

35 U.S.C. § 282 (2011) 1, 11

OTHER AUTHORITIES

Tun-Jen Chiang & Lawrence B. Solum, *The Interpretation-Construction Distinction in Patent Law*, 123 Yale L.J. 530 (2013) 9

Jeffrey G. Sheldon, *How to Write a Patent Application* (2005) 9

U.S. *Amicus* Br., *Applera Corp.* v. *Enzo Biochem, Inc.*, No. 10-426 (U.S. May 17, 2011) 3

U.S. Patent & Trademark Office, *Manual of Patent Examining Procedure* (8th ed. Rev. 9, Aug. 2012) 4

REPLY BRIEF FOR PETITIONER

The merits briefing has considerably narrowed the scope of the parties' dispute. It is common ground that Section 112 requires reasonable certainty in patent claims. The central dispute is what reasonable certainty entails. And neither Biosig nor its *amici* defend the "insolubly ambiguous" test actually articulated below as a proper statement of the definiteness standard. Instead, they focus on attacking an "extreme" (Resp. Br. 34) test of their own imagining, which Nautilus has never advocated. As Nautilus has explained, a claim need not be unambiguous on its face; Section 112 requires courts to read claims in context from a skilled artisan's standpoint. A claim is indefinite if, *after* all appropriate interpretative tools are exhausted, multiple reasonable interpretations of its scope remain. Pet. Br. 2, 35-36.

Biosig and its supporters offer no persuasive argument against *that* standard, which follows directly from Section 112's plain language, its purposes, and this Court's precedent. None credibly explains how claims whose scope is ambiguous can be squared with the statute's text or Congress's core aims recognized by this Court. And the government concedes that the court of appeals' primary justification for diluting the statutory definiteness standard—the presumption of validity, 35 U.S.C. § 282; Pet. App. 22a—"'has *nothing to do* with the degree of clarity that Section 112, ¶ 2, demands,'" and "does *not* authorize issued patent claims to be less particular or distinct than the statute otherwise requires." U.S. Br. 25 (emphases added) (citation omitted). Biosig's contentions that this Court has implicitly rejected Nautilus's standard *sub silentio* distort both this Court's case law and Nautilus's position. Its fears of dire

consequences of faithfully enforcing Congress's command likewise are premised on a caricature of Nautilus's proposed test.

Biosig's and the government's contentions that Biosig's claims here are nonetheless definite are equally untenable. Indeed, in almost the same breath that the government defends the claims as sufficiently clear, it insists that the majority's reading of them was *wrong*. And neither the government nor Biosig asserts that either of the readings adopted below is *unreasonable*.

Instead, Biosig and the government attempt to reconcile the majority's and concurrence's readings, arguing that both yield the same ultimate scope. That is not so. The two interpretations differ in a way that fundamentally alters the scope of Biosig's claims and the design-around opportunities available to other inventors. The majority's reading covers only devices that accomplish the function of detecting equal muscle signals in a specific way—trial-and-error spacing of the electrodes—while the concurrence's broader construction encompasses that *and more*: It covers devices that achieve that end by *any* means. That ambiguity as to the claim's scope created a zone of uncertainty from the day the claims issued, stifling the very efforts of other inventors that the patent system seeks to encourage. Biosig admits, moreover, that Section 112 bars a claim for a function unless the patent identifies the specific structure that achieves it—which Biosig's patent does *not*.

Well over a century ago, this Court recognized that "[t]he developed and improved condition of the patent law, and of the principles which govern the exclusive rights conferred by it, leave no excuse for ambiguous language or vague descriptions." *Merrill*

v. *Yeomans*, 94 U.S. 568, 573 (1877). The same is true today. The Court should reiterate that claims' scope must be reasonably certain and hold that the scope of Biosig's claims is not.

ARGUMENT

I. SECTION 112 REQUIRES CLAIMS' SCOPE TO BE REASONABLY CERTAIN AND FORECLOSES THE "INSOLUBLY AMBIGUOUS" TEST.

It is now beyond dispute that the decision below applied the wrong legal standard in upholding Biosig's claims. The parties agree that a claim "particularly point[s] out and distinctly claim[s]" the invention (35 U.S.C. § 112, ¶ 2 (2011)) *only* if the claim's scope is "*reasonably certain*" when it is "read in light of the specification by one skilled in the art." Pet. Br. 2 (emphasis added); *see* Resp. Br. 21 ("The certainty required in claiming is that which is reasonable." (capitalization omitted)); Br. in Opp. 2, 25. The government has previously taken the same position, U.S. *Amicus* Br. 10, 22, *Applera Corp.* v. *Enzo Biochem, Inc.*, No. 10-426 (U.S. May 17, 2011) ("'the certainty which the law requires in patents is not greater than is reasonable'" (citation omitted)), and it does not appear to advocate, and certainly does not justify, a more lenient standard here, *see* U.S. Br. 12.

Moreover, there is no serious dispute that, whatever reasonable certainty requires, the "insolubly ambiguous" standard does not suffice. *Cf.* Pet. Br. 37-39. The government admits that "insolubly ambiguous" and "amenable to construction" "cannot appropriately be used as stand-alone tests for indefiniteness," and urges this Court to "discountenance" them. U.S. Br. 24. And while Biosig purports to stand by the Federal Circuit's approach, it likewise

does not defend the "insolubly ambiguous" test actually articulated and applied below. Resp. Br. 32-34.

Instead, Biosig attempts to rehabilitate the court of appeals' standard, contending that the court does not really *mean* what it has said: That court has never applied "insolubly ambiguous" as an indefiniteness test, Biosig says (at 32), but has merely "affixe[d]" that "label" *post hoc* "to claims that it has *already* determined" are indefinite. *Cf.* U.S. Br. 23. That is incorrect. *See, e.g.*, *Datamize, LLC* v. *Plumtree Software, Inc.*, 417 F.3d 1342, 1347 (Fed. Cir. 2005) ("Only claims 'not amenable to construction' or 'insolubly ambiguous' are indefinite." (citation omitted)); U.S. Patent & Trademark Office, *Manual of Patent Examining Procedure* § 2173.02(I) (8th ed. Rev. 9, Aug. 2012) (*"MPEP"*). In any event, the court applied "insolubly ambiguous" as a standalone legal test *here*: Both the majority and the concurrence deemed Biosig's claims definite because they are not "insolubly ambiguous." Pet. App. 13a-15a, 25a; *id.* at 29a-30a (Schall, J., concurring).

Biosig similarly asserts (at 33 n.7) that "amenable to construction" simply "means that the process of claim construction" applied to a claim "yields a single, best answer." This, too, is belied by the court of appeals' decisions holding that a claim is definite if it "'can be given *any* reasonable meaning.'" *Hearing Components, Inc.* v. *Shure Inc.*, 600 F.3d 1357, 1366 (Fed. Cir. 2010) (emphasis added) (citation omitted); *see also MPEP* § 2173.02(I) (under current law, claim is valid "if *some meaning* can be gleaned from the language" (emphasis added)); Nokia Br. 9-10 (claims barred only if "one of ordinary skill is unable to ascribe any meaning" to them). Indeed, the "insolubly ambiguous" test treats the existence of multiple

"'very plausible constructions'" as proof of *definiteness*. NOVA Br. 14 (citation omitted). Biosig's revisionist reading also is contradicted by the decision below: Both the majority and concurrence deemed Biosig's claims "amenable to construction" because the district court was able to craft *a* construction—one that the majority and concurrence concluded was *wrong*. Pet. App. 10a n.2, 15a; *id.* at 30a (Schall, J., concurring).

Not only does the court of appeals' test require too little clarity, but the court applies that test to the wrong *thing*. Section 112 requires that the *claim*, read in context by a skilled artisan, "particularly poin[t] out and distinctly clai[m]" the invention from the moment the patent issues. 35 U.S.C. § 112, ¶ 2. Other inventors must know from day one which new innovations are fair game and which are forbidden. But, as Biosig (at 31) and the government (at 7) admit, the court of appeals asks only whether the "'*construction*'" of a claim ultimately adopted by a court "provide[s] sufficient particularity and clarity to inform skilled artisans of the bounds of the claim." Pet. App. 13a (emphasis added) (citation omitted); Pet. Br. 37-38. That construction, however, is typically unknown until long after the patent issues—leaving the public without notice of the claim's boundaries in the interim. The court here announced its construction of Biosig's claims nearly two *decades* after the claims issued—indeed, after the patent *expired*. Pet. App. 3a; J.A. 40.

The "insolubly ambiguous" test articulated and applied below is indefensible—and not seriously defended. And, as the government notes (at 24 & n.9), that test has a proven capacity to lead courts astray. This Court should reverse that erosion of the statu-

tory mandate and reverse the judgment below. At a minimum, it should vacate the decision below and reiterate that Section 112 requires claims' scope to be reasonably certain—not merely susceptible of *some* plausible meaning.

II. A Claim's Scope Is Not Reasonably Certain If It Is Susceptible, In Context, Of More Than One Reasonable Reading.

The only remaining dispute as to Section 112, ¶ 2, is what reasonable certainty regarding claims' scope requires. As Nautilus has shown, the Patent Act's plain language, its purposes, and this Court's precedent establish that a claim's scope is *not* reasonably certain if that scope, read in light of the specification by one skilled in the art, *still* is susceptible of multiple different, reasonable interpretations. Pet. Br. 2, 22-37. Biosig and its *amici* fail to refute this commonsense conclusion. And none offers a workable alternative test grounded in the statute that affords lower courts concrete guidance in ascertaining whether a claim's scope is reasonably certain.

Instead, Biosig et al. devote most of their efforts to assailing a straw man: Nautilus does *not* contend that Section 112, ¶ 2, requires a claim to be clear on its face, or that any claim that "superficially" may "appear to be open to more than one interpretation" is *ipso facto* invalid. Resp. Br. 18; U.S. Br. 16-18. To the contrary, courts *must* consider context, including the specification, and must read the claim from a skilled artisan's perspective, not a layperson's. Pet. Br. 2, 35-36, 46-47. Nor does Nautilus submit that a claim is invalid merely because "two reasonable *persons* disagree over [its] meaning." Resp. Br. 40 (emphasis added); U.S. Br. 18-19. Rather, the existence of multiple different, reasonable *interpretations* of a

claim in context that yield different claim *scopes* renders the claim invalid—because that necessarily deprives skilled artisans of reasonable certainty of the claimed invention's boundaries.

Biosig's and others' critiques of a caricature of the correct standard, which Nautilus has never proposed, are simply diversions. And none of their arguments undermines the standard that Section 112 *does* establish and that Nautilus *does* defend.

A. Permitting Ambiguous Claims Flouts Section 112's Text And Purposes.

Neither Biosig nor its *amici* offer any plausible way to reconcile their proposed rule—which allows claims that are ambiguous even in context—with Section 112's text or purposes.

1. As Nautilus has shown, the ordinary meaning of "particularly pointing out and distinctly claiming" the invention—when first enacted and today—is that a claim's scope must be "*clea[r],*" "*plai[n],*" "*obviou[s],*" and "*not confused*," and must "*singly*" identify just *one* invention. Pet. Br. 23-25 (emphases added) (citations omitted). Those definitions bar ambiguous claims that reasonably refer, in context, to multiple *different* things. *Id.* at 25. Neither Biosig nor its *amici* dispute those definitions.

Biosig instead sidesteps the ordinary meaning of "particularly" in favor of a strained analogy to criminal procedure. The Fourth Amendment's requirement of particularity in warrants, Biosig says (at 35-36), provides the touchstone for particularity in *patent* claims. That analogy ignores fundamental differences in the two requirements' contexts and purposes. The surrounding statutory framework underscores the clarity required of patent claims: Section

112, ¶ 1, requires that the invention be described in "full, clear, concise, and exact terms," 35 U.S.C. § 112, ¶ 1, and "the same precision of disclosure is likewise essential" regarding "the precise scope of the monopoly asserted" in the claims, *Universal Oil Prods. Co.* v. *Globe Oil & Ref. Co.*, 322 U.S. 471, 484 (1944). The Fourth Amendment contains no similar proviso. Drafters of warrants, moreover, must confront inherent uncertainty regarding what precisely will be found in searching someone *else's* property. Patent applicants, in contrast, are describing their *own* inventions. It is entirely reasonable to require an applicant seeking a government monopoly to point out clearly the scope of his exclusive rights.[1]

Biosig's effort to evade the ordinary meaning of "distinctly claiming" is equally implausible. That phrase, it asserts (at 36-37), merely "means that the claims must follow the specification" in a "distinct section of the patent, i.e., separate from the written description and diagrams." But Section 112 *already* provides that "[t]he specification *shall conclude* with one or more claims" identifying the invention. 35 U.S.C. § 112, ¶ 2 (emphasis added). Reading "distinctly claiming" to require only that "claims must follow the specification" (Resp. Br. 37) renders it superfluous, which this Court is loath to accept. *See Milner* v. *Dep't of Navy*, 131 S. Ct. 1259, 1268 (2011). The Court, in fact, has *not* accepted Biosig's reading. It has held that "distinctness," along with "particu-

---

[1] Biosig's allusion (at 36 n.8) to the pleading standard for fraud claims is even further afield. That standard ensures that defendants have notice of the facts and issues to be litigated, and unclear allegations can be clarified before a defendant is prejudiced.

larity," is a "statutory requirement" that is "met only when" claims "clearly circumscribe what is foreclosed from future enterprise." *United Carbon Co.* v. *Binney & Smith Co.*, 317 U.S. 228, 236 (1942). When it rejects claims for not "distinctly claiming" the invention, it is not referring to a failure to place the claims at the *end*. *See id.* at 236-37; *Gen. Elec. Co.* v. *Wabash Appliance Corp.*, 304 U.S. 364, 369-74 (1938).

2. Biosig concedes (at 22) that Section 112, ¶ 2's "main purposes" "are to give the public notice of where innovation is legally permitted and to facilitate review by the PTO and the courts." *Cf.* Pet. Br. 27-37. But it does not explain how allowing ambiguous claims is compatible with those purposes.

The best Biosig offers is its own conjecture that "[c]ompetent attorneys do not deliberately draft ambiguous claims." Resp. Br. 46. But even unintentional ambiguity deprives the public of clear notice of claims' limits. In any event, artfully ambiguous claims are common. Biosig cites a trio of drafting guides discouraging ambiguity, *ibid.*, but it disregards others explicitly instructing drafters how to "intentionally writ[e] ambiguous claims," Jeffrey G. Sheldon, *How to Write a Patent Application*, § 6.5.19, at 6–114 (2005); Pet. Br. 31-32. Biosig offers even less to answer the evidence that drafters have powerful incentives to draft some ambiguous claims and that they in fact do so. Amazon Br. 14 n.8. Its own authority "acknowledge[s] that intentional patentee ambiguity is a real concern" and that "patentees are acting deliberately" in trying to draft ambiguous claims, questioning only how "regularly" drafters "succeed." Tun-Jen Chiang & Lawrence B. Solum, *The Interpretation-Construction Distinction in Patent Law*, 123 Yale L.J. 530, 591-92 (2013).

Biosig further speculates (at 46) that ambiguity is not in drafters' interests, because their ultimate goal is *broad* claims. That is one goal, but not drafters' *only* aim. Ambiguous claims, whether broad or narrow, make it harder for others to design around the patented invention *safely*. And there are strong incentives to seek exclusive rights to things not yet invented, which often entails blurring the claim's boundaries. Amazon Br. 14 n.8; NOVA Br. 15.

Unambiguously broad claims, moreover, come at a cost: The broader a claim, the less likely the patentee can show that the invention thus defined is novel and nonobvious. Malleable claims that can be "turned and twisted" "like a nose of wax" (*White* v. *Dunbar*, 119 U.S. 47, 51 (1886)) allow patentees to urge a narrow construction to secure (or preserve) the patent, but assert (or threaten to assert) a broader construction against alleged infringers. Microsoft Br. 20-22; NOVA Br. 15. This case illustrates that reality: Biosig adopted a broad interpretation not limited by a function to support its infringement allegations, *see* J.A. 37, 244; D.C. Dkt. #19, at 2-5, but then switched to a narrower, functional reading at the summary-judgment stage, *see* Pet. App. 91a-92a ("the spaced relationship is one whereby you remove the [muscle] signals. That's exactly what it is."); *id.* at 98a.

Biosig finally argues that Section 112, ¶ 2's "main purposes" of providing public notice and simplifying adjudication of patentability must be "balanced" against the patent laws' abstract aim of "'securing to the inventor the reward he deserves.'" Resp. Br. 22 (brackets and citation omitted); *see* U.S. Br. 3. That simply begs the question: Congress has decided that unless and until "the inventor set[s] out

a definite limitation of his patent," he is not entitled to *anything*. *Gen. Elec.*, 304 U.S. at 372 (internal quotation marks omitted). And drafters have ample tools to define their inventions with clarity so that they can be rewarded for their inventions. Pet. Br. 44; *infra* at 18.

B. The Presumption Of Validity Does Not Alter The Definiteness Standard.

Like the court of appeals (Pet. App. 22a), Biosig contends (at 54-56) that Section 282's presumption of validity dilutes Section 112's definiteness standard. But far from *altering* Section 112's "requirement[s]," including definiteness, Section 282 *incorporates* them. 35 U.S.C. § 282 ¶ 2(3)(A) (2011); Pet. Br. 40-43. The government agrees the "presumption 'has nothing to do with the degree of clarity that Section 112, ¶ 2, demands.'" U.S. Br. 25 (citation omitted).[2]

Biosig responds (at 55) that "[a]djudging definiteness" often entails "determining" subsidiary "fac-

---

[2] The government's recognition that the presumption of validity applicable in litigation does not alter the indefiniteness standard also means that the PTO has no basis to apply a different standard during patent prosecution. *Cf.* U.S. Br. 21-23. An inventor who meets the statutory criteria for a patent is entitled to "obtain" one. 35 U.S.C. § 101. The PTO has no power to impose additional prerequisites. It cannot reject claims for indefiniteness that satisfy Section 112 any more than it could deny a patent for lack of novelty or nonobviousness if the invention satisfies Sections 102 and 103 as construed by this Court. That a patentee cannot amend claims in litigation does not justify a double standard; the patent recipient, by definition, has *already* had a full opportunity in the PTO to clarify the claims. And even if a court invalidates a claim, the patentee can seek reissuance. 35 U.S.C. § 251. It is *after* a patent issues that ambiguity exacts its toll.

tors" that are themselves "fact-laden"—*viz.*, the relevant art and the ordinary skill of an artisan. But such supposedly "factual underpinnings" (*ibid.*) do not transform the *ultimate* legal question of indefiniteness into a factual one. Courts examine those same subsidiary issues in construing claims. Yet *Markman* v. *Westview Instruments, Inc.*, 517 U.S. 370 (1996), rejected the view that the factual character of such issues renders claim construction *itself* a question of fact for the jury. *See id.* at 389-90.

The government asserts that the clear-and-convincing standard would apply to a disputed subsidiary factual issue *itself* if "a question of definiteness depends" on it. U.S. Br. 26. The Court, however, need not address that question here: Whether or not the presumption applies to such subsidiary issues themselves, it does not alter the definiteness test. And where "there is no material factual dispute" (*id.* at 27 n.11) concerning any such issue, as here, the presumption has no bearing.[3]

C. This Court's Precedent Does Not Support Allowing Ambiguous Claims.

Biosig and its *amici* assert that this Court's case law forecloses the standard that Nautilus advocates. Resp. Br. 38-43; *see*, *e.g.*, U.S. Br. 16-20. But they never confront this Court's repeated pronouncements that claims must "*clearly*" and "*precisely*" define the invention so that its boundaries are "*known*." *United*

---

[3] Likewise, the Court has no occasion here to decide what deference, if any, is appropriate to PTO findings on such issues. *Cf.* U.S. Br. 27. Contrary to Biosig's assertion (at 56), the PTO did not and could not make a "finding of definiteness," which may explain why Biosig cites no specific factual finding by the PTO on any subsidiary issue to which the Court could defer.

Carbon, 317 U.S. at 232 (emphases added) (internal quotation marks omitted); *Gen. Elec.*, 304 U.S. at 369; Pet. Br. 34-35.

Neither Biosig nor others, moreover, cite any decision of this Court holding a claim definite despite recognizing that its scope, read in context by a skilled artisan, was susceptible of multiple reasonable readings. *Carnegie Steel Co.* v. *Cambria Iron Co.*, 185 U.S. 403 (1902), did not conclude that a reading of the claim different from the Court's was also reasonable; the Court "th[ought] it [was] impossible to read th[e] patent" differently than the Court did, in light of the specification, from a skilled artisan's perspective. *Id.* at 437. And *Eibel Process Co.* v. *Minnesota & Ontario Paper Co.*, 261 U.S. 45 (1923), illustrates only that claim terms may appear opaque to laypersons yet be clear to a skilled artisan armed with the specification. One skilled in the art "had no difficulty, *when his attention was called to their importance*, in fixing the place of the disturbance and ripples to be removed, or in determining what was the substantial pitch needed to equalize the speeds of the stock and wire at that place." *Id.* at 65-66 (emphasis added). Nothing in *Eibel* implies that the claim would have been upheld if the patent had *not* called the skilled artisan's attention to those criteria,

or if the skilled artisan could reasonably have construed the claim in context in *different* ways.[4]

Biosig and its *amici* are thus left to argue that other cases *imply* that ambiguous claims are acceptable. That is incorrect.

1. Biosig contends (at 19, 40-41) that this Court's holdings that claim construction is the responsibility of the court, *see Markman*, 517 U.S. at 376-91, and various cases construing claims foreclose Nautilus's standard because they "take for granted the existence of reasonable disputes over the meaning of a claim." *Cf.* U.S. Br. 18. That contention distorts this Court's decisions and the rule Nautilus defends.

Markman merely assumes, and cases construing claims simply illustrate, that the scope of a claim that might seem unclear on its face—*before* the specification and skilled artisan's knowledge are consulted—may in fact be reasonably certain *after* the context is considered. *See United States* v. *Adams*, 383 U.S. 39, 48-49 (1966); *Universal Oil*, 322 U.S. at 480-85; *Ball & Socket Fastener Co.* v. *Kraetzer*, 150 U.S. 111, 116-17 (1893); *White*, 119 U.S. at 49-51; *Keystone Bridge Co.* v. *Phoenix Iron Co.*, 95 U.S. 274, 275-79 (1877); *Merrill*, 94 U.S. at 569-74. Claim construction is necessary, in short, because a claim may be ambiguous *without* context. It is *that* kind of am-

---

[4] *Minerals Separation, Ltd.* v. *Hyde*, 242 U.S. 261 (1916), appears to have focused on *enablement*. *See id.* at 271 (disclosure "is clearly sufficiently definite to guide those skilled in the art to its successful application"). In any event, it addressed claims and a specification that, unlike here, detailed the invention quite specifically. *See id.* at 267-68 ("'a fraction of one per cent.,'" "'two and one-half to ten minutes,'" "'1,000 to 1,100 revolutions per minute,'" etc. (citations omitted)).

biguity that "*Markman* takes as its starting point" (Resp. Br. 28) and that claim construction resolves.

Nothing in *Markman* or this Court's cases construing claims, however, presupposes that a valid claim *still* may be ambiguous after it is interpreted in context. And it is *only* such claims that fail the standard that Section 112 establishes and Nautilus supports. Pet. Br. 35-36.

2. Biosig contends (at 38) that this Court accepts claims with multiple reasonable interpretations where one interpretation renders the claim invalid over the prior art, citing four cases. None involved indefiniteness. Indeed, in none did the Court say that a claim was open to multiple reasonable interpretations after the applicable interpretative tools were applied. For example, in *Keystone Manufacturing Co.* v. *Adams*, 151 U.S. 139, 142, 144-45 (1894), both the claim and the specification *expressly* recited the feature ("revolve in the same direction") that distinguished the prior art. Instead, in each case the Court interpreted the claims to secure the rewards of the invention—*i.e.*, "the grant"—by protecting the disclosed invention: "[T]hat [construction] should be adopted which will secure to the patentee his actual invention, rather than to adopt a construction fatal to the grant." *Smith* v. *Snow*, 294 U.S. 1, 14 (1935) (citing *Keystone Manufacturing*, 151 U.S. at 144-45). *Cf. Adams*, 383 U.S. at 48-49 ("While the claims of a patent limit the invention, and specifications cannot be utilized to expand the patent monopoly, it is fundamental that claims are to be construed in the light of the specifications and *both are to be read with a view to ascertaining the invention*." (emphasis added) (citations omitted)). This line of cases, therefore, does not aid Biosig here because the specification

fails to disclose trial-and-error spacing or any other technique for achieving the desired result.

Biosig misreads *Smith*'s "fatal to the grant" as "invalidity": This Court, Biosig says, will "save a claim from invalidity by adopting the narrower of two readings." Resp. Br. 38. But *Smith* does not square with this reading. Citing *Keystone*, it applied a "broad" and "liberal construction" (to protect the disclosed invention) *instead* of a narrow one "fatal to the grant." 294 U.S. at 14. Two of the other cases Biosig cites also considered whether to construe a claim *broadly* to find infringement, not narrowly to avoid invalidity. *See Coupe* v. *Royer*, 155 U.S. 565, 576-77 (1895); *McClain* v. *Ortmayer*, 141 U.S. 419, 425 (1891). Securing the disclosed invention accords with the maxim cited by Biosig: The "law abhors forfeitures." Resp. Br. 39. In any event, Biosig's misreading of these cases is academic here because Biosig has never contended that any of the several proffered interpretations of "spaced relationship" would invalidate its patent.

3. Biosig finally suggests (at 26-27) that the "doctrine of equivalents" developed by this Court shows that ambiguity in claims' scope is not forbidden. *Cf.* U.S. Br. 17. Biosig has things backwards. The doctrine of equivalents provides further reason *not* to dilute the standard of definiteness that Section 112 requires. By protecting patentees from efforts to evade a patent's "litera[l]" scope through "insubstantial" variations, the doctrine diminishes the incentives for inventors to draft claims ambiguously. *Warner-Jenkinson Co.* v. *Hilton Davis Chem. Co.*, 520 U.S. 17, 21, 24 (1997). Indeed, the doctrine takes for granted that the claim is clear in the first

place; one cannot know which trivial variants are covered if the claim *itself* is ambiguous.

D. Faithfully Enforcing Section 112 By Its Terms Would Improve, Not Harm, The Patent System.

Biosig and its *amici* fall back on purported practical problems that adopting Nautilus's proposed standard would supposedly foment. Resp. Br. 23-24, 47-48; Interval Licensing Br. 6-17; Biotech Ind. Org. Br. 20-29. Such "considerations of policy divorced from the statute's text and purpose" are irrelevant, *United States* v. *Tohono O'Odham Nation*, 131 S. Ct. 1723, 1731 (2011), and in any event unfounded.

Biosig's doomsday prediction (at 47) of "mass invalidation" of existing patents—a false prophecy advanced (but never coming to pass) each time this Court has curbed the erosion of patentability requirements—is premised again on a caricature of the standard Nautilus advocates. Nautilus does not contend that claims are invalid whenever two courts, "two judges," or even "two *litigants* take different stances" (*id.* at 34) on a claim's scope. *Supra* at 6-7. Only two different *readings* of a claim's scope that are each reasonable to a skilled artisan in context invalidate a claim. Biosig offers no basis to believe that all claims of innumerable existing patents fail that standard.

Biosig's assertion (at 48) that courts will be overwhelmed by increased litigation is equally meritless. Litigants already tender disputes concerning claims' scope, which courts must adjudicate by reading claims in context. Allowing ambiguous claims, as Biosig proposes, does not eliminate those disagreements or make lower courts' lives easier. Indeed,

prohibiting claims susceptible in context of two reasonable readings would simplify courts' work: Instead of having to expend scarce time and resources resolving which of multiple reasonable readings of a highly technical claim's scope is *slightly* better, the scope typically will be clear from the outset.

Biosig finally contends (at 23-26) that achieving the clarity that Section 112 requires is just too difficult, and that the "inheren[t] imprecis[ion]" of language makes ambiguity inevitable. But "the protection of the public" requires rejecting claims that fail to "set out a definite limitation of" the invention, *even if* the inventor has "made the best disclosure possible." *Gen. Elec.*, 304 U.S. at 372.

Biosig, moreover, never confronts the many ways that drafters can convey a claim's scope clearly—such as including definitions, positive and negative examples, specific distinctions from the prior art, and others. Nor does it account for drafters' ability to submit multiple claims simultaneously—and, if their initial efforts fail, to try again (and again, and again) in the PTO. Pet. Br. 44; Microsoft Br. 12-19; Elec. Frontier Found. Br. 28-30. This case itself belies Biosig's fears: No one contends that words cannot capture Lekhtman's alleged invention. The problem is not that the English language made it impossible to define the invention clearly. It is that no one *tried* until years too late.

III. The Scope Of Biosig's Claims Is Not Reasonably Certain.

Straightforward application of the correct definiteness standard shows that the scope of Biosig's claims is not reasonably certain. Read in context from the skilled artisan's standpoint, the claims'

scope bears at least two different, reasonable interpretations. The government's dissonant contentions that a skilled artisan could "reasonably understan[d]" the claims' scope, but that the construction adopted below was *wrong* (U.S. Br. 30, 32), exemplify an all-too-common misunderstanding of what reasonable certainty requires. Biosig's claims, moreover, are indefinite even under its *own* reading of this Court's case law.

A. Biosig's Claims Are Susceptible Of Multiple Reasonable Interpretations.

The majority and concurrence adopted different, reasonable interpretations of the scope of Biosig's claims. The government (at 30) finds the majority's view "unpersuasive," but neither it nor Biosig argues that *either* reading is unreasonable. Biosig could hardly do so, having embraced *both* readings during this litigation. *Supra* at 10. Instead, Biosig and the government each attempt to reconcile those conflicting constructions. Both fail.

Biosig (at 17) and the government (at 30) admit that the majority construed the term "'spaced relationship'" as limited by the "function of substantially removing [muscle] signals." Pet. App. 20a. Biosig contends (at 52), however, that the concurrence said nothing about that term's meaning. That is incorrect. The concurrence's whole point was that the majority erred by reading into "'spaced relationship'" a "functional requirement" that it "does not contain." Pet. App. 32a.

Biosig (at 52-53) further speculates that the conflicting panel interpretations nevertheless are consistent because, *if* the concurrence had considered the issue, it "presumably would have" found a func-

tional limitation elsewhere in the claim. *Cf.* U.S. Br. 29-30. But Biosig cannot elide the conflict by helping itself to a hypothetical conclusion that the concurrence *might* have (but never in fact) adopted.

In any event, contrary to Biosig's (at 53) and the government's (at 30-31) assertions, whether the functional limitation restricts the "spaced relationship" of electrodes or instead exists independently dramatically affects the claim's scope. Under the majority's narrower reading, a device would infringe the claims *only* if it detected muscle signals "of substantially equal magnitude and phase" by *means of* the electrodes' spacing. Pet. App. 17a, 20a (internal quotation marks omitted). Devices that detect equal muscle signals by some *other* means—such as making the different electrodes of different materials, or adding a special sleeve partially covering some of the electrodes—are fair game. Under the broader reading of the concurrence that Biosig imagines, in contrast, Biosig's claims block devices that detect equal muscle signals by *any* means, whether due to electrode spacing or not.

Although the court of appeals has now held—19 years after the patent issued—that the narrower interpretation of Biosig's claims is correct, an inventor in 1994 could not have known which of these two different, reasonable readings would ultimately be upheld. The ambiguity created a "zone of uncertainty" that "discourage[d] invention only a little less than unequivocal foreclosure of the field." *United Carbon*, 317 U.S. at 236. Faced with the possibility that a court *might* read the claims, as the concurrence did and the government does, to encompass devices that detect equal muscle signals by any means, few inventors would bother trying to develop better methods,

only to risk having their efforts later rendered a waste (or swallowed by litigation costs, NOVA Br. 19-20). For nearly two decades, Biosig got the benefit of the spectre of a broader reading of its claims that the court of appeals has now held is incorrect.

Biosig (at 53-54) and the government (at 30-31 & n.13) deny this difference in claim scope, arguing in essence that no means other than electrode spacing exists by which another inventor could achieve the function of detecting substantially equal muscle signals. That assumption is baseless. The universe of possibilities, no doubt, is unknown. But that is precisely the point: The central premise of the Patent Act is that many innovations remain undiscovered, and its core aim is to encourage inventors to *find* them. But ambiguous claims like Biosig's deter other inventors from ever trying. Microsoft Br. 26-28; NOVA Br. 17-19; Amazon Br. 4-7.

B. Biosig's Claims Improperly Define The Invention By Its Function Untethered To Any Defined Structure.

The claims here also are closely analogous to those that this Court held indefinite in *General Electric*, 304 U.S. 364, and *United Carbon*, 317 U.S. 228. Pet. Br. 50-52. Biosig contends (at 41) that those cases addressed the "far more egregious situation" where "the patent claims a novel function but does not incorporate an adequate description of the structure that will produce" it. Even on Biosig's crabbed reading of those cases, its claims suffer the same flaw.

The purported "inventive concept" (J.A. 114) of Lekhtman's invention is to detect equal muscle signals between the electrodes, even though the signals

emitted by a user's palms are not equal. J.A. 83, 114-15. But nothing in the claim or specification recites "the structure that will produce that function." Resp. Br. 41. Indeed, Lekhtman did not describe his trial-and-error electrode spacing until 15 years after the patent issued. Pet. Br. 14. In the majority's view, it sufficed that a skilled artisan likely could divine a suitable structure for himself. Pet. App. 20a. That is irrelevant: As Biosig admits (at 41), the patent must "incorporate an adequate description of the structure" by which that function is achieved. Because Biosig's patent, like those in *General Electric*, 304 U.S. at 371-72, and *United Carbon*, 317 U.S. at 233, failed to specify such a structure, they are indefinite. Moreover, because this function was Biosig's only asserted basis for distinguishing the invention from the prior art (Fujisaki), Biosig's claims also are indefinite because they do not "clearly distinguish what is claimed from what went before in the art." *Id.* at 236; Pet. Br. 52.

C. Nautilus Presented The Best Evidence Of Indefiniteness.

Biosig finally urges (at 54-56) the Court to affirm on the basis that Nautilus presented no evidence of indefiniteness, and thus failed to rebut the presumption of validity. But Biosig misapprehends the presumption, which does not establish any evidentiary standard for the ultimate issue of indefiniteness. *Supra* at 11-12.

Nautilus, moreover, offered the best evidence of the claims' ambiguity—the patent itself—and explained how the claims' scope was unclear in context. D.C. Dkt. #40. Expert evidence regarding the meaning of "spaced relationship" was unnecessary; no one asserts that that phrase is a term of art in this set-

ting. Rather, the ambiguity arose because, in the unique context of *this* patent, "spaced relationship" *either* could stand alone and refer to *any* spacing—as it does in many other patents, *cf.* U.S. Br. 28—*or* could refer to spacing necessary to achieve a particular function recited later in the claims. *Supra* at 19-21. Biosig responded with an expert declaration, but it only bolstered Nautilus's position by embracing inconsistent constructions of the claims. *See* J.A. 273-75. No further evidence was needed.

CONCLUSION

The judgment of the court of appeals should be reversed.

Respectfully submitted.

THOMAS G. HUNGAR
MATTHEW D. MCGILL
JONATHAN C. BOND
GIBSON, DUNN & CRUTCHER LLP
1050 Connecticut Avenue, N.W.
Washington, D.C. 20036
(202) 955-8500

JAMES E. GERINGER
JEFFREY S. LOVE
JOHN D. VANDENBERG
Counsel of Record
PHILIP WARRICK
KLARQUIST SPARKMAN, LLP
One World Trade Center
Suite 1600
121 S.W. Salmon Street
Portland, OR 97204
(503) 595-5300
john.vandenberg@klarquist.com

Counsel for Petitioner Nautilus, Inc.

April 14, 2014

AMICUS CURIAE BRIEF

RECORD AND BRIEFS

Supreme Court, U.S.
FILED
APR - 2 2014
OFFICE OF THE CLERK

No. 13-369

In the Supreme Court of the United States

NAUTILUS, INC., PETITIONER

v.

BIOSIG INSTRUMENTS, INC.

ON WRIT OF CERTIORARI TO THE UNITED STATES COURT OF APPEALS FOR THE FEDERAL CIRCUIT

BRIEF FOR THE UNITED STATES AS AMICUS CURIAE SUPPORTING RESPONDENT

DONALD B. VERRILLI, JR.
Solicitor General
Counsel of Record
STUART F. DELERY
Assistant Attorney General
MALCOLM L. STEWART
Deputy Solicitor General
CURTIS E. GANNON
Assistant to the Solicitor General
MARK R. FREEMAN
DARA S. SMITH
Attorneys

Department of Justice
Washington, D.C. 20530-0001
SupremeCtBriefs@usdoj.gov
(202) 514-2217

NATHAN K. KELLEY
Solicitor
KRISTI L. R. SAWERT
STACY B. MARGOLIES
Associate Solicitors
United States Patent and Trademark Office
Alexandria, Va. 22313

Library of Congress
Law Library

QUESTIONS PRESENTED

1. Whether a patent claim may satisfy the requirement of 35 U.S.C. 112, ¶ 2 (2006) that a patent applicant "particularly point[] out and distinctly claim[]" the invention sought to be patented, when a term in the claim is subject to multiple reasonable interpretations.

2. Whether the statutory presumption of patent validity in 35 U.S.C. 282 (2006) affects the application of the definiteness requirement in 35 U.S.C. 112, ¶ 2 (2006), when a patent-infringement defendant asserts a defense of invalidity based on indefiniteness.

TABLE OF CONTENTS

Page

Interest of the United States 1
Statement 1
Summary of argument 9
Argument:
A. A patent claim is "particular[]" and "distinct[]" under Section 112 if a person skilled in the relevant art would reasonably understand what is claimed 12
1. Definiteness is evaluated from the perspective of other skilled artisans in light of the specification and prosecution history 13
2. The need to interpret a patent claim by choosing between two or more plausible readings does not make the claim fatally indefinite 16
3. This Court should discountenance certain language that the Federal Circuit has used to describe the test for evaluating definiteness 22
B. Indefiniteness, like any other invalidity defense, must sometimes be established by clear-and-convincing evidence 24
C. Petitioner has failed to establish that a person skilled in the art would not reasonably understand the scope of respondent's patent claim 27
Conclusion 33

TABLE OF AUTHORITIES

Cases:

Bancorp Servs., LLC v. *Hartford Life Ins. Co.*, 359 F.3d 1367 (Fed. Cir. 2004) 23
Carnegie Steel Co. v. *Cambria Iron Co.*, 185 U.S. 403 (1902) 2, 13, 14, 15, 19
Carr, In re, 297 F. 542 (D.C. Cir. 1924) 22

Cases—Continued: Page

Datamize, LLC v. *Plumtree Software, Inc.*, 417 F.3d 1342 (Fed. Cir. 2005) 7, 8
Dickinson v. *Zurko*, 527 U.S. 150 (1999) 27
Eibel Process Co. v. *Minnesota & Ontario Paper Co.*, 261 U.S. 45 (1923) 20, 29
Every Penny Counts, Inc. v. *Wells Fargo Bank, N.A.*, No. 11-cv-2826, 2014 WL 869092 (M.D. Fla. Mar. 5, 2014) 24
Exhibit Supply Co. v. *Ace Patents Corp.*, 315 U.S. 126 (1942) 16
Festo Corp. v. *Shoketsu Kinzoku Kogyo Kabushiki Co.*, 535 U.S. 722 (2002) 12, 15, 16, 17
Fitzgerald v. *Barnstable Sch. Comm.*, 555 U.S. 246 (2009) 22
General Elec. Co. v. *Wabash Appliance Corp.*, 304 U.S. 364 (1938) 13
Graham v. *John Deere Co.*, 383 U.S. 1 (1966) 13, 16
Hogg v. *Emerson*, 52 U.S. (11 How.) 587 (1850) 15
Honeywell Int'l, Inc. v. *United States*, 609 F.3d 1292 (Fed. Cir. 2010), cert. denied, 131 S. Ct. 3021 (2011) 23
Incandescent Lamp Patent, The, 159 U.S. 465 (1895) 31
J.E.M. Ag Supply, Inc. v. *Pioneer Hi-Bred Int'l, Inc.*, 534 U.S. 124 (2001) 14
KSR Int'l Co. v. *Teleflex Inc.*, 550 U.S. 398 (2007) 27
Lighting Ballast Control LLC v. *Philips Elecs. N. Am. Corp.*, No. 2012-1014, 2014 WL 667499 (Feb. 21, 2014) 25
Lorillard v. *Pons*, 434 U.S. 575 (1978) 22
Markman v. *Westview Instruments, Inc.*, 517 U.S. 370 (1996) ..... *passim*
McClain v. *Ortmayer*, 141 U.S. 419 (1891) 3, 13
Merrill v. *Yeomans*, 94 U.S. (4 Otto) 568 (1876) 19

Cases—Continued: Page

Microsoft Corp. v. *i4i Ltd. P'ship*, 131 S. Ct. 2238 (2011) 11, 25, 26, 27
Miller v. *Fenton*, 474 U.S. 104 (1985) 26
Minerals Separation, Ltd. v. *Hyde*, 242 U.S. 261 (1916) 19, 20, 29
Miyazaki, Ex parte, No. 2007-3300, 89 U.S.P.Q.2d 1207 (B.P.A.I. Nov. 19, 2008) 20, 21
Morris, In re, 127 F.3d 1048 (Fed. Cir. 1997) 21
Mowry v. *Whitney*, 81 U.S. (14 Wall.) 620 (1871) ... 14, 20, 29
Ornelas v. *United States*, 517 U.S. 690 (1996) 26
Permutit Co. v. *Graver Corp.*, 284 U.S. 52 (1931) 13
Prater, In re, 415 F.2d 1393 (C.C.P.A. 1969) 21
Reno v. *Koray*, 515 U.S. 50 (1995) 18
Schreiber, In re, 128 F.3d 1473 (Fed. Cir. 1997) 32
Schriber-Schroth Co. v. *Cleveland Trust Co.*, 311 U.S. 211 (1940) 16
Smith v. *Snow*, 294 U.S. 1 (1935) 18
Star Scientific, Inc. v. *R.J. Reynolds Tobacco Co.*, 537 F.3d 1357 (Fed. Cir. 2008), cert. denied, 556 U.S. 1106 (2009) 8, 23
Teva Pharm. USA, Inc. v. *Sandoz, Inc.*, cert. granted, No. 13-854 (Mar. 31, 2014) 26
United Carbon Co. v. *Binney & Smith Co.*, 317 U.S. 228 (1942) 13, 18
United States v. *Adams*, 383 U.S. 39 (1966) 15
United States v. *Hayes*, 555 U.S. 415 (2009) 18
Warner-Jenkinson Co. v. *Hilton Davis Chem. Co.*, 520 U.S. 17 (1997) 22
W.L. Gore & Assocs. v. *Garlock, Inc.*, 721 F.2d 1540 (Fed. Cir. 1983), cert. denied, 469 U.S. 851 (1984) 15
Zletz, In re, 893 F.2d 319 (Fed. Cir. 1989) 21, 22

Statutes and regulation: Page

Act of July 8, 1870, ch. 230, § 26, 16 Stat. 201 12
Leahy-Smith America Invents Act, Pub. L. No. 112-29, 125 Stat. 284 (2011) 2
Patent Act of 1952, 35 U.S.C. 1 *et seq.*:
35 U.S.C. 2(a)(1) 1
35 U.S.C. 102 (2006) 25, 32
35 U.S.C. 103 (2006) 25, 32
35 U.S.C. 103(a) (2006) 13, 15
35 U.S.C. 111 (2006) 2
35 U.S.C. 112 (2006) ..... *passim*
¶ 1 ..... 13, 14, 15, 32
¶¶ 1-2 ..... 2, 12
¶ 2 ..... *passim*
35 U.S.C. 162 (2006):
¶ 1 13
¶ 2 14
35 U.S.C. 163 (2006) 14
35 U.S.C. 282 (2006) 25
¶ 1 ..... 3, 10, 24, 25
¶ 2(3) 3, 25
35 U.S.C. 302 (2006) 5
35 U.S.C. 302-307 (2006) 5
35 U.S.C. 303(a) (2006) 5
35 U.S.C. 304 (2006) 5
35 U.S.C. 305 (2006) 5
37 C.F.R. 1.75(d)(1) 15

Miscellaneous: Page

Supplementary Examination Guidelines for Determining Compliance With 35 U.S.C. 112 and for Treatment of Related Issues in Patent Applications, 76 Fed. Reg. (Feb. 9, 2011) 32
p. 7162 2
p. 7164 ..... 20, 21

In the Supreme Court of the United States

No. 13-369

NAUTILUS, INC., PETITIONER

v.

BIOSIG INSTRUMENTS, INC.

ON WRIT OF CERTIORARI
TO THE UNITED STATES COURT OF APPEALS
FOR THE FEDERAL CIRCUIT

BRIEF FOR THE UNITED STATES AS AMICUS CURIAE SUPPORTING RESPONDENT

INTEREST OF THE UNITED STATES

This case concerns the Patent Act's requirement that the specification of each patent "shall conclude with one or more claims particularly pointing out and distinctly claiming the subject matter which the applicant regards as his invention." 35 U.S.C. 112, ¶ 2 (2006). The United States Patent and Trademark Office (PTO) is "responsible for the granting and issuing of patents," 35 U.S.C. 2(a)(1), and the Court's decision will significantly affect the enforcement of patents issued by the PTO. The United States therefore has a substantial interest in the Court's resolution of the questions presented.

STATEMENT

1. Each written application for a patent must include "a specification as prescribed by section 112" of the

Patent Act. 35 U.S.C. 111 (2006).[1] In relevant part, Section 112 prescribes as follows:

> The specification shall contain a written description of the invention, and of the manner and process of making and using it, in such full, clear, concise, and exact terms as to enable any person skilled in the art to which it pertains, or with which it is most nearly connected, to make and use the same, and shall set forth the best mode contemplated by the inventor of carrying out his invention.
>
> The specification shall conclude with one or more claims particularly pointing out and distinctly claiming the subject matter which the applicant regards as his invention.

35 U.S.C. 112, ¶¶ 1-2.

Under the so-called "definiteness" requirement in Section 112, ¶ 2, each patent must conclude with claims that, when construed in light of the specification and the relevant prosecution history, communicate the legal scope of the patent grant to persons skilled in the relevant art. *Markman* v. *Westview Instruments, Inc.*, 517 U.S. 370, 373 (1996); *Carnegie Steel Co.* v. *Cambria Iron Co.*, 185 U.S. 403, 432, 437-438 (1902); see generally *Supplementary Examination Guidelines for Determining Compliance With 35 U.S.C. 112 and for Treatment of Related Issues in Patent Applications*, 76 Fed. Reg. 7162 (Feb. 9, 2011) (*PTO Definiteness Guidelines*).

---

[1] In the Leahy-Smith America Invents Act, Pub. L. No. 112-29, 125 Stat. 284 (2011), Congress made minor amendments to several of the Patent Act provisions that are implicated here. The amended versions are inapplicable to this case because the underlying patent application and this proceeding both predate those amendments. See Pet. Br. 2 n.1, 17 n.5, 26 n.7. Accordingly, this brief's citations to Title 35 of the United States Code refer to the 2006 edition.

That requirement serves the dual purposes of "secur[ing] to the patentee all to which he is entitled" and of "appris[ing] the public of what is still open to them." *Markman*, 517 U.S. at 373 (brackets omitted) (quoting *McClain* v. *Ortmayer*, 141 U.S. 419, 424 (1891)).

An inventor's failure to comply with any requirement of Section 112, including the definiteness requirement, will render "the patent or any claim in suit" invalid. 35 U.S.C. 282, ¶ 2(3). In a patent-infringement suit, however, the "patent shall be presumed valid," and the "burden of establishing invalidity of a patent or any claim thereof shall rest on the party asserting such invalidity." 35 U.S.C. 282, ¶ 1.

2. Respondent is the assignee of U.S. Patent No. 5,337,753 (the '753 patent), which relates to an improved heart-rate monitor for use during exercise. J.A. 40, 52. The '753 patent explains that prior-art monitors were often inaccurate in detecting the electrical signals generated by the heart (electrocardiograph or ECG signals) because of the presence of other electrical signals in the same frequency range that are generated by the muscles used in moving an arm or squeezing the monitor with fingers (electromyogram or EMG signals). J.A. 52. The '753 patent claims an improved monitor designed to eliminate interference from the EMG signals. *Ibid.*

The patent describes a heart-rate monitor contained in a cylindrical bar that a user grasps with two hands, so that each hand contacts two electrodes, which are "ring member[s] of a conductive material force-fit onto the" bar and "spaced from" each other. J.A. 56-57. The device is illustrated in Figure 1 of the patent:

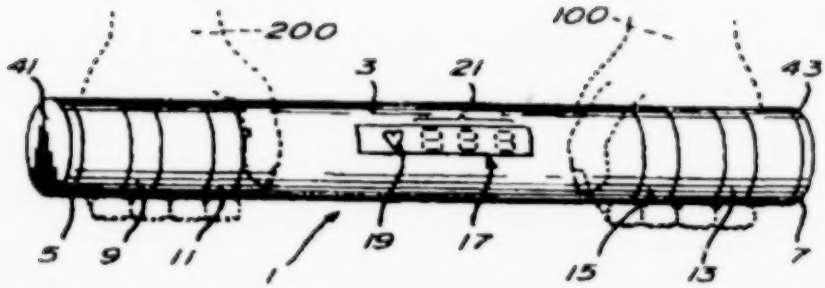

J.A. 42. Each pair of electrodes includes a "common" electrode (numbers 11 and 15 in the figure), which is connected to ground, and a "live" electrode (numbers 9 and 13). *Ibid.* The live electrodes are connected to a difference amplifier with inputs of opposite polarity. J.A. 56-57.

The specification explains that each pair of electrodes receives both ECG and EMG signals. J.A. 57-58. Because the EMG signals from one hand are of "substantially equal magnitude and phase" as those from the other hand, combining those two signals with opposite polarities in the difference amplifier effectively cancels them out. J.A. 57. By contrast, the ECG signals detected on one hand are already of "opposite phase" to those detected on the other hand. J.A. 58. When their inputs are combined with opposite polarity, the effect is to add them together, resulting in a total output that "substantially" reflects only the ECG signals. *Ibid.*

Claim 1 of the '753 patent recites a "heart rate monitor for use by a user in association with exercise apparatus and/or exercise procedures" with a structure that tracks the illustration above. J.A. 61-63. The claim specifies that the invention comprises an "elongate member" (*i.e.*, the cylindrical bar) with a "display device"; a "live electrode" and a "common electrode" arranged on each half of the cylindrical bar "in spaced relationship with each other"; "electronic circuitry including a difference amplifier" with terminals of oppo-

site polarity; and electrical connections between the live electrodes and a difference amplifier's two input terminals of opposite polarity. J.A. 61-62. The claim further specifies that the electrodes are arranged so that a user may grasp the bar "with one hand of the user on said first half contacting said first live electrode and said first common electrode,, and with the other hand of the user on said second half contacting said second live electrode and said second common electrode." J.A. 62. The claim also specifies that, when the user grasps the electrode pairs, the combination of the EMG and ECG signals in the amplifier will produce an output with "a substantially zero [EMG] signal" and a "non-zero [ECG] signal." J.A. 62-63.

3. The dispute in this case arose in the late 1990s, when petitioner's predecessor began selling exercise equipment with heart-rate monitors that respondent alleges infringe the '753 patent. Pet. App. 8a.

a. In 2004, respondent sued petitioner for patent infringement in federal district court. Pet. App. 8a. While that case was pending, petitioner submitted two requests for a reexamination of the '753 patent—an administrative proceeding in the PTO in which a patent examiner reconsiders a previously issued patent. *Id.* at 8a-9a.[2] The PTO granted the requests, and the parties

---

[2] See generally 35 U.S.C. 302-307. "Any person at any time" may request a reexamination, 35 U.S.C. 302, which the PTO may grant if the Director determines that the request raises a "substantial new question of patentability," 35 U.S.C. 303(a), 304. A reexamination may result in the cancellation or narrowing, but not the enlargement, of any claim in the challenged patent. 35 U.S.C. 305. Because reexamination proceedings are limited to questions of patentability over the prior art, see 35 U.S.C. 303(a), a reexamination will not consider invalidity issues arising under Section 112 (such as alleged indefiniteness).

voluntarily dismissed the district-court action without prejudice pending the outcome of the reexamination. *Id.* at 9a.

The reexamination focused primarily on whether the '753 patent was anticipated or rendered obvious by U.S. Patent No. 4,444,200. Pet. App. 9a. That 1984 patent—known after its inventor as "Fujisaki"—described a heart-rate monitor "having a pair of grip sensors adapted to be gripped with both hands for sensing heart pulse signals." *Id.* at 9a n.1. In the Fujisaki monitor, each sensor "is composed of two conductive cylindrical electrodes arranged in an axially aligned relationship and electrically insulated from each other." *Ibid.* The Fujisaki monitor's circuitry "includes a differential amplifier having inputs from the grip sensors for amplifying the difference between the heart pulse signals." *Ibid.*

The PTO reexamination initially rejected claim 1 of the '753 patent on the ground that it had been anticipated by Fujisaki. Pet. App. 9a. The inventor argued, however, that neither Fujisaki nor a different reference cited by the examiner had disclosed the innovation in his monitor (*i.e.*, that the differential amplifier could be employed to cancel electrical noise from the user's muscles and thereby isolate heart signals). J.A. 83-91. The examiner was persuaded, and the PTO issued a reexamination certificate confirming the patentability of the '753 patent's claims without amendment. J.A. 197-200. The examiner found that the "crucial claim language" distinguishing respondent's monitor from the prior art was claim 1's requirement that the muscle signals "'will be subtracted from each other to produce a substantially zero [EMG] signal at the output of said difference amplifier.'" J.A. 78-79 (emphasis omitted) (quoting passage reprinted at J.A. 62).

b. After the reexamination, respondent re-filed its infringement action against petitioner. Pet. App. 9a-10a. Following a claim-construction hearing, the district court issued an order concluding that the phrase "spaced relationship" in claim 1 means that "there is a defined relationship between the live electrode and the common electrode" on one side of the device and "the same or a different defined relationship" between the electrodes on the other side. *Id.* at 40a, 43a-44a.

Despite that construction, in February 2012, the district court granted petitioner's motion for summary judgment of invalidity for indefiniteness. With respect to the phrase "spaced relationship," the court concluded that "nothing in the specification[] or the claim or the file history" would teach a skilled artisan "this proper spacing that should be used." Pet. App. 50a, 103a. At a hearing, the court explained that the claim language "did not tell me or anyone what precisely the space should be. * * * Not even any parameters as to what the space should be." *Id.* at 72a. The court issued an order memorializing the ruling, *id.* at 38a-39a, and entered judgment in petitioner's favor, *id.* at 36a-37a.

4. The court of appeals reversed and remanded. Pet. App. 3a-32a.

a. The court of appeals explained that, under Federal Circuit precedent, a patent claim is invalid for indefiniteness "only when it is 'not amenable to construction' or 'insolubly ambiguous.'" Pet. App. 13a (quoting *Datamize, LLC* v. *Plumtree Software, Inc.*, 417 F.3d 1342, 1347 (Fed. Cir. 2005)). Under that standard, the court said, a claim is indefinite if it cannot meaningfully be construed by a court or "if reasonable efforts at claim construction result in a definition that does not provide sufficient particularity and clarity to inform skilled

artisans of the bounds of the claim." *Ibid.* (quoting *Star Scientific, Inc.* v. *R.J. Reynolds Tobacco Co.*, 537 F.3d 1357, 1371 (Fed. Cir. 2008), cert. denied, 556 U.S. 1106 (2009)).

Applying that standard, the court of appeals held that claim 1 of the '753 patent is not invalid due to any ambiguity in the phrase "spaced relationship." Pet. App. 15a. The court explained that the claim language, specification, and drawings in the '753 patent "provide sufficient clarity to skilled artisans as to the bounds of this disputed term." *Id.* at 16a. The court observed that, because the claim requires "the live and common electrodes to independently detect electrical signals at two distinct points of a hand," "the distance between the live electrode and the common electrode cannot be greater than the width of a user's hands." *Ibid.* And because the patent contemplates that the electrodes of each pair must be distinct from each other, the space cannot be so small that the live and common electrodes "effectively merg[e] * * * into a single electrode with one detection point." *Ibid.* Those "inherent parameters," the court concluded, could be sufficient for a skilled artisan "to understand the metes and bounds" of the claim language. *Ibid.*

The court of appeals also stated that another requirement of claim 1—*i.e.*, that the difference amplifier produce a "substantially zero" EMG signal—"sheds further light on the meaning of 'spaced relationship.'" Pet. App. 16a-17a. The court cited a declaration submitted by the patent's inventor during the reexamination proceeding. That declaration stated that skilled artisans can readily determine with common electrical equipment whether a given electrode design and arrangement substantially removes EMG signals—and can adjust

variables like the spacing, size, shape, and material of the electrodes to achieve that desired output. *Id.* at 18a-19a. The court concluded that, taken together, "[t]hese parameters constitute the metes and bounds of 'spaced relationship' as articulated in the '753 patent. Nothing more rigorous is required under § 112, ¶ 2." *Id.* at 21a.

b. Judge Schall concurred. Pet. App. 29a-32a. He agreed that the majority had "correctly set[] forth our law on indefiniteness," *id.* at 29a, and he joined the court's conclusion that the phrase "spaced relationship" is not indefinite, *id.* at 30a. In Judge Schall's view, however, the majority erred in inferring a functional correlation between the "spaced relationship" requirement and the separate requirement of claim 1 that the difference amplifier must cancel the EMG signals. *Id.* at 31a-32a. Rather, in his view, the inherent physical parameters of the electrode arrangement—close enough for a user's hand to touch both electrodes, but not so close as to cause the electrodes to merge—provided sufficient guidance for persons skilled in the art. *Id.* at 31a. Judge Schall therefore disagreed with the majority's view that "the 'spaced relationship' limitation itself—rather than other limitations of claim 1—included a functional requirement to remove EMG signals." *Ibid.*

SUMMARY OF ARGUMENT

A. Under 35 U.S.C. 112, ¶ 2, a patent must "particularly point[] out and distinctly claim[] the subject matter which the applicant regards as his invention." Because patents are technical documents addressed to a technical audience, that definiteness requirement is to be evaluated from the perspective of persons skilled in the art to which the invention pertains. A patent claim satisfies that definiteness requirement if, in light of the accompanying specification and of the patent's prosecu-

tion history before the PTO, a person skilled in the art would reasonably understand the scope of the claim.

A claim is not rendered indefinite merely because some interpretation is required to choose between two or more competing readings. Otherwise, few patents could survive suits for their enforcement. Such suits often require a judge to engage in claim construction that may depend on both expert testimony and a sophisticated analysis of the patent. See *Markman* v. *Westview Instruments, Inc.*, 517 U.S. 370, 389-390 (1996). This Court has rejected indefiniteness challenges even when the Court was not unanimous about how to construe a claim. Nor should courts be required to follow the same approach as the PTO, which deliberately employs a lower standard of ambiguity for claims in a still-pending patent application. As courts have recognized for nearly a century, that difference in approach is appropriately rooted in the distinct roles played by the PTO and the courts, and in the fact that claims are easily amended before a patent is issued but not once an issued patent becomes the subject of litigation.

While the Federal Circuit has often employed the correct approach to evaluating definiteness under Section 112, it has also stated that a claim is indefinite only when it is "not amenable to construction" or is "insolubly ambiguous." Pet. App. 13a (citation omitted). Because those two phrases, especially when taken in isolation, are susceptible to misapplication, it would be appropriate for this Court to discountenance their use while reaffirming that the definiteness inquiry should be grounded in the reasonable understanding of a person skilled in the relevant art.

B. The statutory presumption of patent validity, 35 U.S.C. 282, ¶ 1, generally "requires an invalidity defense

to be proved by clear and convincing evidence." *Microsoft Corp.* v. *i4i Ltd. P'ship*, 131 S. Ct. 2238, 2242 (2011). While the presumption of validity does not alter the degree of clarity required by Section 112, the clear-and-convincing-evidence standard sometimes applies to a defense of indefiniteness. Some definiteness challenges may be decided as purely legal questions. But when a question of definiteness depends on a factual predicate—as when it turns on what a person skilled in the relevant art would understand—a defendant must show by clear-and-convincing evidence that a skilled artisan would not have understood the meaning of the disputed claim terms.

C. In this case, petitioner contends that respondent's patent is invalid because of purported ambiguity in the requirement that electrodes be in "spaced relationship" with each other. J.A. 61. That phrase—which appears in many patent claims—is not indefinite. The claim makes clear that the electrodes in each pair must be close enough that they can be grasped by a single hand but sufficiently separated to generate an electrical signal between two detection points. Petitioner identifies no sound reason to believe that a person skilled in the art of bioelectrical signal measurement would be unable to determine, within those limits, how to space electrodes in conformity with the claim.

Although petitioner emphasizes the differences between the majority and concurring opinions in the court below, those two opinions did not disagree about the ultimate question of what claim 1 of respondent's patent covers. Rather, they disagreed only as to whether certain functional limitations inhered in the phrase "spaced relationship" or instead in *other* language within the claim. Because that disagreement did not render the

claim as a whole indefinite, the Court should reject petitioner's challenge under Section 112, ¶ 2.

ARGUMENT

The requirement that a patent claim be definite, see 35 U.S.C. 112, ¶ 2, promotes the "delicate balance the law attempts to maintain between inventors, who rely on the promise of the law to bring the invention forth, and the public, which should be encouraged to pursue innovations, creations, and new ideas beyond the inventor's exclusive rights." *Festo Corp.* v. *Shoketsu Kinzoku Kogyo Kabushiki Co.*, 535 U.S. 722, 731 (2002). Under this Court's precedents, a patent claim satisfies that definiteness requirement if, in light of the specification and the prosecution history, a person skilled in the art would reasonably understand the scope of the claim. Here, notwithstanding the court of appeals' use of some phrases that might make mischief when read in isolation, that court correctly concluded that a skilled artisan would understand the scope of claim 1 of respondent's patent.

A. A Patent Claim Is "Particular[]" And "Distinct[]" Under Section 112 If A Person Skilled In The Relevant Art Would Reasonably Understand What Is Claimed

Like its 1870 statutory predecessor, Section 112 of the Patent Act of 1952 requires a patent applicant to describe his invention and to supply "one or more claims particularly pointing out and distinctly claiming the subject matter which the applicant regards as his invention." 35 U.S.C. 112, ¶¶ 1-2; see Act of July 8, 1870, ch. 230, § 26, 16 Stat. 201. The latter requirement is satisfied when a person skilled in the relevant art would reasonably understand the scope of the claimed invention.

1. Definiteness is evaluated from the perspective of other skilled artisans in light of the specification and prosecution history

A patent claim defines the scope of the patentee's exclusive rights, thereby "secur[ing] to the patentee all to which he is entitled" and "appris[ing] the public of what is still open to them." *Markman* v. *Westview Instruments, Inc.*, 517 U.S. 370, 373 (1996) (brackets omitted) (quoting *McClain* v. *Ortmayer*, 141 U.S. 419, 424 (1891)). As petitioner notes (Br. 28-29), this Court has often emphasized the importance of the notice function of patent claims. See, *e.g.*, *General Elec. Co.* v. *Wabash Appliance Corp.*, 304 U.S. 364, 372 (1938); *Permutit Co.* v. *Graver Corp.*, 284 U.S. 52, 60 (1931). The Court has warned in particular that a "zone of uncertainty" about a patent's scope has the effect of "discourag[ing] invention." *United Carbon Co.* v. *Binney & Smith Co.*, 317 U.S. 228, 236 (1942).

a. Patents are technical documents, however, that are addressed to a technical audience, not "to lawyers, or even to the public generally." *Carnegie Steel Co.* v. *Cambria Iron Co.*, 185 U.S. 403, 437 (1902). Consistent with that fact, a patent must disclose its invention to the satisfaction of other persons "skilled in the art to which [the invention] pertains, or with which it is most nearly connected." 35 U.S.C. 112, ¶ 1; cf. 35 U.S.C. 103(a) (whether an invention is non-obvious must be evaluated from the perspective of "a person having ordinary skill in the art"); *Graham* v. *John Deere Co.*, 383 U.S. 1, 14 (1966) (same).[3]

---

[3] Petitioner attempts (Br. 26) to draw a contrast between Section 112 and a separate provision specifying that "[n]o plant patent shall be declared invalid for noncompliance with section 112 of this title if the description is as complete as is reasonably possible." 35 U.S.C.

The patent for an improved method of manufacturing steel in *Carnegie Steel* was addressed "to the manufacturers of steel," and the Court found that "any description which is sufficient to apprise *them* * * * of the definite feature of the invention * * * is sufficiently definite to sustain the patent." 185 U.S. at 437 (emphasis added). When the Court rejected a challenge to a patent for a method of manufacturing cast-iron railroad wheels, it explained that a specification is "sufficient" when it is "comprehensible" to "those skilled in the art," even "though the unskilled may not be able to gather from it how to use the invention." *Mowry* v. *Whitney*, 81 U.S. (14 Wall.) 620, 644 (1871).

Whether a patent claim is sufficiently definite under Section 112 therefore must be evaluated from the perspective of a person skilled in the relevant art. If a skilled practitioner in the same field would understand the boundaries of the claimed invention, the applicant has satisfied its burden under Section 112, ¶ 2, to provide notice to the public of the scope of the claims. That is true even if a lay judge or jury could not understand the same language without some difficulty. By the same token, when a claim appears clear to a judge or jury, it may still be invalid under Section 112 if the relevant

---

162, ¶ 1. Such plant patents, however, protect only asexual reproduction of certain plants, 35 U.S.C. 163, and are not materially analogous to the utility patent at issue here. See generally *J.E.M. Ag Supply, Inc.* v. *Pioneer Hi-Bred Int'l, Inc.*, 534 U.S. 124, 134-135 (2001). Unlike utility patents, they do not require a description sufficient to "enable" someone else "to make and use the [invention]." 35 U.S.C. 112, ¶ 1. Nor do they require there to be *any* "claim" apart from the plant that is "shown and described." 35 U.S.C. 162, ¶ 2.

audience—persons skilled in the art—would perceive a fatal ambiguity.[4]

b. The Court has also identified two other sources that contribute to the construction of disputed patent claims. First, a claim should be interpreted not in isolation, but in conjunction with the patent's specification. See, *e.g.*, *Markman*, 517 U.S. at 389-390; *United States* v. *Adams*, 383 U.S. 39, 49 (1966); *Carnegie Steel*, 185 U.S. at 432; *Hogg* v. *Emerson*, 52 U.S. (11 How.) 587, 606 (1850). That follows from the text of Section 112, which shows that the claims are actually part of the specification. See 35 U.S.C. 112, ¶ 2 ("The specification shall conclude with one or more claims."). In defining the metes and bounds of the invention, the summing-up language of the claims draws upon—and is intended to be understood in light of—the preceding written description setting forth the invention in "full, clear, concise, and exact terms." 35 U.S.C. 112, ¶ 1; see 37 C.F.R. 1.75(d)(1) ("[T]he terms and phrases used in the claims must find clear support or antecedent basis in the description so that the meaning of the terms in the claims may be ascertainable by reference to the description.").

Second, a patent's "prosecution history" before the PTO is "relevant to construing [its] claims." *Festo*, 535

---

[4] The knowledge of persons skilled in the art must be evaluated as of the time of the patent application rather than the time of an infringement trial. See *W.L. Gore & Assocs.* v. *Garlock, Inc.*, 721 F.2d 1540, 1556-1558 (Fed. Cir. 1983), cert. denied, 469 U.S. 851 (1984). Terms with a recognized meaning among skilled practitioners at the time of the application may acquire new or different connotations before the end of the 20-year patent term. Such changes in usage cannot retrospectively render a patent indefinite, just as post-patent technological developments cannot render a patent invalid on grounds of obviousness. See 35 U.S.C. 103(a) (non-obviousness is judged "at the time the invention was made").

U.S. at 741; see *Graham*, 383 U.S. at 33; *Exhibit Supply Co.* v. *Ace Patents Corp.*, 315 U.S. 126, 136-137 (1942); *Schriber-Schroth Co.* v. *Cleveland Trust Co.*, 311 U.S. 211, 217-218, 220-221 (1940). In *Festo*, the Court explained that amendments made during prosecution to overcome an examiner's objections under Section 112 become part of the interpretive background of the allowed claims and may give rise to estoppel in litigation. See 535 U.S. at 736-737. A skilled practitioner seeking to construe a patent claim of potentially uncertain scope will therefore look to the prosecution history of the patent for evidence of the claim's meaning.

Accordingly, a patent claim satisfies Section 112, ¶ 2, if a person skilled in the art would reasonably understand the scope of the claim, in light of the specification and other intrinsic evidence, including the prosecution history. Indeed, the parties do not appear seriously to dispute that overarching proposition. See, *e.g.*, Pet. Br. 25 ("One skilled in the relevant art thus must be able to know from reading the claim's language in context what the one invention is that the patent encompasses."); *id.* at 35 ("A claim that appears ambiguous on its face" nevertheless "may be clear when read in light of the specification."); Resp. Br. 1.

2. The need to interpret a patent claim by choosing between two or more plausible readings does not make the claim fatally indefinite

To the extent petitioner contends (Br. 46-47) that a patent is invalid as indefinite whenever the parties to infringement litigation reasonably disagree over the interpretation of a claim term, petitioner goes too far—as do supporting amici who demand the kind of certainty

associated with titles to real property.[5] For both principled and practical reasons, this Court has repeatedly declined in this context to require faultless precision, or to hold that patent claims are invalid whenever judges or litigants reasonably disagree about their construction.

a. "[T]he nature of language" may "make[] it impossible to capture the essence of a thing in a patent application." *Festo*, 535 U.S. at 731. A claim therefore may not "describe with complete precision the range of [an invention's] novelty." *Ibid.* In such circumstances, however, the Court has recognized the "doctrine of equivalents," under which the "scope of a patent is not limited to its literal terms but instead embraces all equivalents to the claims described." *Id.* at 732. The Court in *Festo* acknowledged that the doctrine of equivalents comes at a cost, since it expands the patent's coverage to encompass a (potentially uncertain) range of additional conduct beyond the patent's literal terms. *Ibid.* ("If competitors cannot be certain about a patent's extent, they may be deterred from engaging in legitimate manufactures outside its limits, or they may invest by mistake in competing products that the patent secures."); cf. Pet. Br. 3 ("Other inventors and entrepreneurs cannot invest with confidence in developing new inventions if they cannot know what existing patents cover."). The Court nevertheless recognized that some uncertainty is "the price of ensuring the appropriate incentives for innovation." *Festo*, 535 U.S. at 732.[6]

---

[5] See, *e.g.*, Elec. Frontier Found. Amicus Br. 2.

[6] The doctrine of equivalents would have been potentially applicable here if claim 1 of respondent's patent, rather than referring to live and common electrodes "in spaced relationship with each other," J.A. 61, had specified in millimeters the precise distance

If the mere existence of a bona fide dispute about a patent's scope were evidence of indefiniteness, few patents could survive their own enforcement. When this Court held in *Markman* that claim construction is a question for judges rather than juries, it recognized that resolving such questions may depend on both expert testimony and a "necessarily sophisticated analysis of the whole [patent]." 517 U.S. at 389-390. The *Markman* Court sought to minimize the "zone of uncertainty" decried in *United Carbon*. *Id.* at 390 (quoting *United Carbon*, 317 U.S. at 236). It did not suggest, however, that the mere existence of a reasonable dispute—or one that could not be resolved without litigation—would mean that the underlying patent was invalid. Cf. *Smith* v. *Snow*, 294 U.S. 1, 14 (1935) (when a claim is "fairly susceptible of two constructions," a court should adopt the one "which will secure to the patentee his actual invention").

b. Nor does disagreement among judges about a patent's scope establish that the patent is fatally indefinite. Cf. Pet. Br. 4, 48-49. Such disagreements do not render a criminal statute too ambiguous to be enforced.[7] And the Court's patent cases demonstrate that a claim may

---

between the electrodes. Despite that specificity, a competing device with electrodes situated a different distance apart could be sufficiently equivalent to infringe the patent.

[7] See, *e.g.*, *United States* v. *Hayes*, 555 U.S. 415, 420, 429-430 (2009) (noting division among circuits, and within the court of appeals' decision, before finding the rule of lenity inapplicable in a criminal case in which two Members dissented from the Court's construction of the statute); *Reno* v. *Koray*, 515 U.S. 50, 64-65 (1995) ("A statute is not ambiguous for purposes of lenity merely because there is a division of judicial authority over its proper construction.") (citation and internal quotation marks omitted).

be sufficiently definite, notwithstanding a division of judicial opinion about how it should be construed.

In *Carnegie Steel*, for example, the Court recognized that aspects of the invention "might have been described more definitely" if the patent had specified the size of a reservoir and what it meant by a "considerable quantity" of molten metal. 185 U.S. at 437. The Court nevertheless found that the claim was "sufficiently definite to sustain the patent." *Ibid.* The Court reached that conclusion notwithstanding the view of four dissenting Justices who were "unable to assent to the construction" adopted by the Court because they found a different construction to be "incontrovertible." *Id.* at 454, 481-482 (White, J., dissenting); see *Merrill* v. *Yeomans*, 94 U.S. (4 Otto) 568, 574 (1876) (holding that a patent sufficiently claimed a process for deodorizing heavy hydrocarbon oils, notwithstanding Justice Clifford's dissenting view that, when "properly construed," the claim was for "the described new manufacture, and not, as decided by a majority of the court, merely for the process").

c. Similarly, a claim is not rendered indefinite merely because some limitations of the claim may need to be varied through experimentation. The patent in *Minerals Separation, Ltd.* v. *Hyde*, 242 U.S. 261 (1916), for example, involved an improved process for extracting valuable minerals from crushed ore, but it did not specify the "amount of oil and the extent of agitation necessary." *Id.* at 270. The Court rejected an indefiniteness objection, explaining that, given the variations in the composition of ores, "it is obviously impossible to specify in a patent the precise treatment which would be most successful and economical in each case." *Id.* at 271. The Court held that the claim was "clearly sufficiently definite to guide those skilled in the art to its successful

application." *Ibid.* In *Eibel Process Co.* v. *Minnesota & Ontario Paper Co.*, 261 U.S. 45 (1923), the Court rejected an indefiniteness challenge to a patent for using gravity to increase the speed of a paper-making machine by placing a wire at a "high" or "substantial elevation above the level." *Id.* at 50, 65-66. The Court held that greater precision was not required because the pitch of the wire would need to vary "due to the varying conditions of speed and stock existing in the operations of [such] machines," and that someone skilled in the art could determine the appropriate pitch. *Id.* at 65-66; see *Mowry*, 81 U.S. (14 Wall.) at 644 (refusing to invalidate patent for failure to describe how much heat to apply to cast-iron wheel because "it is obvious that only vague and uncertain directions could have been given").

d. Petitioner contends (Br. 45) that this Court should adopt the approach of the PTO, which deliberately uses what the agency calls "a lower threshold of ambiguity when reviewing a pending claim for indefiniteness" than the one used by the Federal Circuit. *Ex parte Miyazaki*, No. 2007-3300, 89 U.S.P.Q.2d 1207, 1211 (B.P.A.I. Nov. 19, 2008); see *PTO Definiteness Guidelines*, 76 Fed. Reg. at 7164. Rather than applying certain canons of construction that permit limiting a claim to preserve its validity or to account for statements made during examination (as courts do), PTO examiners will reject a claim as indefinite if, when viewed in light of the specification as understood by a person skilled in the art, the claim "is amenable to two or more plausible claim constructions." *Miyazaki*, 89 U.S.P.Q.2d at 1211; see *PTO Definiteness Guidelines*, 76 Fed. Reg. at 7164.

The difference between the PTO and judicial approaches, however, stems not from divergent interpretations of Section 112, but from the distinct roles that

the PTO and the courts play in the patent system. "The lower threshold is applied [during patent examination] because the patent record is in development and not fixed." *PTO Definiteness Guidelines*, 76 Fed. Reg. at 7164. During that period, the PTO construes patent claims broadly "in an effort to establish a clear record of what [the] applicant intends to claim." *Ibid.* If such a construction yields more than one plausible interpretation of a claim during examination, the PTO appropriately requires the applicant "to more precisely define the metes and bounds of the claimed invention." *Miyazaki*, 89 U.S.P.Q.2d at 1211; see *PTO Definiteness Guidelines*, 76 Fed. Reg. at 7164. By contrast, once a patent has been issued and is under review by a court, simple amendments are impossible, the full prosecution record is available, and courts endeavor to adopt saving constructions. At that point, applying the PTO's lower threshold would simply promote gamesmanship by encouraging litigants to seek invalidation of claims based on latent ambiguities in terms that cannot be easily modified and that have no bearing on infringement or invention. Cf. Am. Bar Ass'n Amicus Br. 19-20 & n.9.

For nearly a century, the courts have recognized that the PTO (and formerly the Patent Office) may appropriately insist on a greater degree of clarity than would the court in an infringement suit. See, *e.g.*, *In re Morris*, 127 F.3d 1048, 1054 (Fed. Cir. 1997) ("It would be inconsistent with the role assigned to the PTO in issuing a patent to require it to interpret claims in the same manner as judges."); *In re Zletz*, 893 F.2d 319, 321 (Fed. Cir. 1989) ("[D]uring patent prosecution when claims can be amended, ambiguities should be recognized, scope and breadth of language explored, and clarification imposed."); *In re Prater*, 415 F.2d 1393, 1404-1405

(C.C.P.A. 1969); *In re Carr*, 297 F. 542, 543-544 (D.C. Cir. 1924). As the D.C. Circuit explained 90 years ago, once "a patent has issued," a patentee may no longer "control the phraseology of his claims," so the courts will construe them to preserve validity "if possible"; before the patent has issued, however, "there is no reason * * * why an applicant * * * should not draw his claims to cover his actual invention only." *Carr*, 297 F. at 543-544. The PTO therefore is justified in using a lower threshold for indefiniteness to ensure that claims, once fixed and issued to the public, are as "precise, clear, correct, and unambiguous" as possible. *Zletz*, 893 F.2d at 322.

Congress is presumably "aware of an administrative or judicial interpretation of a statute" and "adopt[s] that interpretation when it re-enacts a statute without change." *Lorillard* v. *Pons*, 434 U.S. 575, 580-581 (1978); see *Fitzgerald* v. *Barnstable Sch. Comm.*, 555 U.S. 246, 258-259 (2009) (construing statute in light of pre-enactment circuit-court precedent about materially similar predecessor statutes). Accordingly, this Court should be particularly loath to disturb the settled distinction that the PTO and the courts have recognized between the pre- and post-issuance contexts, which long predates the 1952 enactment of the Patent Act. Cf. *Warner-Jenkinson Co.* v. *Hilton Davis Chem. Co.*, 520 U.S. 17, 25-28 (1997) (declining to find that the 1952 Patent Act had vitiated the previously established "doctrine of equivalents").

3. This Court should discountenance certain language that the Federal Circuit has used to describe the test for evaluating definiteness

Relying on prior Federal Circuit decisions, the court below declared that a patent claim is indefinite under

Section 112 "only when" the claim is "insolubly ambiguous" or "not amenable to construction." Pet. App. 13a (citation and internal quotation marks omitted). As petitioner explains (Br. 37-39), those formulations, taken in isolation, are in tension with the statutory requirement that an applicant "particularly point[] out and distinctly claim[]" the invention. 35 U.S.C. 112, ¶ 2.[8] The phrase "amenable to construction" could also be read to suggest that a patent claim satisfies Section 112 if a *court* can ascribe meaning to its language. See, *e.g.*, *Honeywell Int'l, Inc.* v. *United States*, 609 F.3d 1292, 1301 (Fed. Cir. 2010) ("A claim is indefinite only if the claim is insolubly ambiguous, and no narrowing construction can properly be adopted.") (internal quotation marks, citations, and brackets omitted), cert. denied, 131 S. Ct. 3021 (2011). But a court's ability to wrest some meaning from a patent claim's words does not necessarily mean that the relevant audience (*i.e.*, persons skilled in the art) would understand what was claimed.

The Federal Circuit itself generally has avoided that misconception, as it has recognized that the ability to reduce "the meaning of a claim term into words is not dispositive of whether the term is definite." *Star Scientific, Inc.* v. *R.J. Reynolds Tobacco Co.*, 537 F.3d 1357, 1371 (2008), cert. denied, 556 U.S. 1106 (2009). It has often employed the phrase "insolubly ambiguous" as shorthand for the unobjectionable proposition that a claim may be sufficiently definite even though considerable study and analysis are required to determine its meaning. See, *e.g.*, *Bancorp Servs., LLC* v. *Hartford*

---

[8] Some of the amici that do not expressly support petitioner also recognize that the Federal Circuit's formulations are problematic. See, *e.g.*, Yahoo! Inc. Amicus Br. 6-15; Am. Intellectual Prop. Law Ass'n Amicus Br. 7-9.

Life Ins. Co., 359 F.3d 1367, 1371 (Fed. Cir. 2004) ("[A] claim is not indefinite merely because it poses a difficult issue of claim construction; if the claim is subject to construction; i.e., it is not insolubly ambiguous, it is not invalid for indefiniteness.").

Nevertheless, the phrases "insolubly ambiguous" and "amenable to construction" are susceptible to possible misapplication by district courts.[9] And their repetition may encourage patent drafters to attempt to exploit potential ambiguities rather than to cure them. See Pet. Br. 30-32. It would therefore be appropriate for the Court to discountenance the use of those phrases, and to make clear in particular that they cannot appropriately be used as stand-alone tests for indefiniteness under Section 112. Rather, consistent with the statute and this Court's decisions, the definiteness inquiry should be grounded in the reasonable understanding of a person skilled in the relevant art.

B. Indefiniteness, Like Any Other Invalidity Defense, Must Sometimes Be Established By Clear-And-Convincing Evidence

With respect to the second question presented, petitioner contends (Br. 39-43) that the statutory presumption of patent validity, 35 U.S.C. 282, ¶ 1, can have no bearing on a court's evaluation of the definiteness of a patent claim "once the patent's compliance with Section 112 is put in issue." Pet. Br. 43. That is incorrect.

---

[9] See, *e.g.*, *Every Penny Counts, Inc.* v. *Wells Fargo Bank, N.A.*, No. 11-cv-2826, 2014 WL 869092, at *4 (M.D. Fla. Mar. 5, 2014) (finding that "the account," as used in claim, "lacks definiteness," because it might mean several different things and "no informed and confident choice is available among the contending definitions," but that "the extent of the indefiniteness * * * falls far short of the 'insoluble ambiguity' required to invalidate the claim").

1. Petitioner correctly observes (Br. 43) that the statutory presumption "has nothing to do with the degree of clarity that Section 112, ¶ 2, demands." The presumption requires courts and litigants to assume that an issued patent comports with the requirements of Section 112. But it does not authorize issued patent claims to be less particular or distinct than the statute otherwise requires, just as the presumption does not alter the substantive rules of novelty under Section 102 or obviousness under Section 103.

2. Petitioner is wrong, however, in its further contention (Br. 41-43) that the presumption of validity—and its accompanying clear-and-convincing-evidence standard—does not apply when a defendant in a patent-infringement lawsuit asserts a defense of indefiniteness. Section 282 states that, in any patent-infringement suit, "[a] patent shall be presumed valid," and the "burden of establishing invalidity of a patent or any claim thereof shall rest on the party asserting such invalidity." 35 U.S.C. 282, ¶ 1. That presumption "requires an invalidity defense to be proved by clear and convincing evidence." *Microsoft Corp.* v. *i4i Ltd. P'ship*, 131 S. Ct. 2238, 2242 (2011). The statute provides no ground for distinguishing indefiniteness from other defenses of invalidity; it includes "[i]nvalidity * * * for failure to comply with any requirement of [S]ection[] 112" in its list of defenses. 35 U.S.C. 282, ¶ 2(3).

As petitioner notes (Br. 41), the court below described indefiniteness as "a legal issue" that is resolved "without deference." Pet. App. 12a.[10] Petitioner seeks

---

[10] The Federal Circuit recently reaffirmed its view that claim construction is a question of law always subject to de novo review. See *Lighting Ballast Control LLC* v. *Philips Elecs. N. Am. Corp.*, No. 2012-1014, 2014 WL 667499, at *1 (Feb. 21, 2014) (en banc). The

to ground that conclusion in the introductory paragraph of *Markman*, which petitioner quotes for the proposition that claim construction is "'a matter of law,' which lies 'exclusively within the province of the court.'" Br. 42 (quoting 517 U.S. at 372). But *Markman*'s substantive discussion was more nuanced. The Court recognized that claim construction "'falls somewhere between a pristine legal standard and a simple historical fact,'" and that, even though the inquiry was entrusted solely to judges, it had "evidentiary underpinnings" and might sometimes depend on expert testimony about a "meaning peculiar to a trade or profession." 517 U.S. at 388, 389, 390 (quoting *Miller* v. *Fenton*, 474 U.S. 104, 114 (1985)).

Petitioner also relies (Br. 41) on Justice Breyer's concurring opinion in *Microsoft*, which stated that the clear-and-convincing-evidence standard would be inapplicable to a claim of invalidity resting on "how the law applies to facts as given." 131 S. Ct. at 2253. But "there is no rigid rule" requiring de novo review of a "mixed question of law and fact," such as the "application of an objective legal standard to the facts." *Ornelas* v. *United States*, 517 U.S. 690, 701 (1996) (Scalia, J., dissenting). When a question of definiteness depends on a factual predicate—as when it turns on what a person skilled in the relevant art would have understood at a particular time—a defendant must show by clear-and-convincing

---

United States filed an amicus brief at the en-banc stage in *Lighting Ballast*, contending (at 2-3, 7-9) that some claim-construction decisions depend on subsidiary factual findings that should receive deferential review (including, *e.g.*, findings about how a skilled artisan would have understood claim terms at the time of the invention). This Court has granted review of that question in *Teva Pharmaceuticals USA, Inc.* v. *Sandoz, Inc.*, cert. granted, No. 13-854 (Mar. 31, 2014).

evidence that a person skilled in the relevant art would not have understood the meaning of the disputed claim terms. Cf. *Microsoft*, 131 S. Ct. at 2243 ("[T]he same factual questions underlying the PTO's original examination of a patent application will also bear on an invalidity defense in an infringement action."); *Dickinson* v. *Zurko*, 527 U.S. 150, 152 (1999) (holding that, in certain proceedings, the PTO's factual findings are subject to review under the Administrative Procedure Act's substantial-evidence standard).[11]

C. Petitioner Has Failed To Establish That A Person Skilled In The Art Would Not Reasonably Understand The Scope Of Respondent's Patent Claim

In reversing the district court's judgment of indefiniteness, the court below used the phrases "insolubly ambiguous" and "amenable to construction," Pet. App. 13a, which, as discussed above, could be misapplied. The court of appeals' judgment should be affirmed, however, because petitioner has failed to establish any disqualifying ambiguity in claim 1 of respondent's patent.

1. Claim 1 of respondent's patent states that a "live electrode" and a "common electrode" should be arranged on each half of the heart monitor's cylindrical bar "in spaced relationship with each other." J.A. 61. Petitioner's indefiniteness argument rests (Br. 47-49, 52) on the purported ambiguity of the phrase "spaced relationship." Within the context of the specification as a whole, the phrase is not indefinite.

---

[11] When there is no material factual dispute, definiteness can be decided as a purely legal question. Cf. *KSR Int'l Co.* v. *Teleflex Inc.*, 550 U.S. 398, 427 (2007) (discussing obviousness).

The phrase "spaced relationship" has appeared in the claims of more than 22,000 granted patents since 1976. See Intellectual Prop. Law Ass'n of Chi. Amicus Br. 18. It means only that two things are some distance apart from each other—which is essentially what the district court concluded after the claim-construction hearing. Pet. App. 43a-44a. Read as a whole, however, respondent's specification and its diagrams provide significantly more precision than that.

Respondent's claim makes clear that the electrodes in each pair must be close enough for the user's left or right hand to "contact[]" both the live and the common electrode at once. J.A. 62. That contact results in EMG and ECG signals "between" the live and the common electrode, J.A. 62-63, which means that the space between them cannot be so small that they effectively merge into a single electrode with only one detection point. Those minimum and maximum distances—far enough to generate a signal, no greater than the width of a hand—are further substantiated by the figures and by other language within the written specification. J.A. 42 (fig. 1, reproduced at p. 4, *supra*, showing hands in contact with pairs of separated electrodes); J.A. 57 (describing each hand as being "in physical and electrical contact with both electrodes").

Petitioner identifies no sound reason to believe that a person skilled in the art of bioelectrical signal measurement would be unable to determine, within those limits, how to space electrodes in conformity with the claim. In fact, the evidence in the record indicates that the entire device "could have been built within a matter of hours

by a person of ordinary skill in the art in 1992, and without any significant experimentation." J.A. 226.[12]

2. In arguing that the phrase "spaced relationship" is fatally indefinite, petitioner emphasizes (Br. 48-49) what it calls the "starkly" different readings of the majority and concurring opinions in the court below. But mere disagreement between judges does not establish that a claim is indefinite. See pp. 18-19, *supra*. In any event, petitioner is wrong in asserting (Br. 48) that the disagreement between the two opinions "bears directly on the scope of the patent." In fact, the opinions below do not suggest any meaningful disagreement between the panel majority and Judge Schall regarding the ultimate question of *what claim 1 covers*. Rather, the disagreement concerns only whether particular functional limitations are imposed by the phrase "spaced relationship," or instead by *other* language within the claim.

If an allegedly infringing device had electrodes that were "spaced" in a way sufficient to satisfy Judge Schall's construction (*i.e.*, separated from each other by less than a hand's breadth), but the device were calibrated in some way that did not allow the EMG signals to cancel each other, the device would not practice respondent's patent. Under Judge Schall's view, that exclusion from the patent's coverage would not result from a failure to place electrodes in a "spaced relationship." It would instead result from the failure to configure the apparatus as required by a subsequent passage of claim 1: "so that" the left- and right-hand EMG "signals will be subtracted from each other to produce a substantially zero [EMG] signal at the output of said

---

[12] As noted above, the need for some experimentation would not render a claim indefinite under this Court's decisions in *Minerals Separation*, *Eibel Process*, and *Mourry*. See pp. 19-20, *supra*.

difference amplifier." J.A. 62. Thus, Judge Schall noted with disapproval that the majority's "analysis proceeds as if the 'spaced relationship' limitation itself—*rather than other limitations of claim 1*—included a functional requirement to remove EMG signals." Pet. App. 31a (emphasis added). Judge Schall did *not* disagree, however, with the majority's view that claim 1 as a whole imposes that functional limitation.[13]

The majority, applying what petitioner calls "a narrower, functional view" (Br. 49), concluded that a device does not have the requisite "spaced relationship" if its processed EMG signals are not "substantially remov[ed]." Pet. App. 16a-17a. For the reasons stated in Judge Schall's concurrence, that aspect of the majority's analysis is unpersuasive. If the two electrodes on an allegedly infringing device are sufficiently removed from each other to prevent the electrodes from merging into one, but some *other* aspect of the device's configuration prevents the EMG signals from cancelling, the latter fact provides no sound basis for disputing that the electrodes are in a "spaced relationship."

For purposes of the indefiniteness inquiry, however, the crucial point is that the choice between the two readings of "spaced relationship" has no practical bearing on the ultimate scope of the claim's coverage. Under both approaches, a new device will not infringe respondent's patent if it does not combine EMG signals of simi-

---

[13] Petitioner suggests (Br. 48) that claim 1 is ambiguous in its application to a hypothetical device using "additional circuitry" to remove EMG signals. But a device that employed such circuitry to reduce EMG signals would not infringe because the claim specifies that the signals are reduced by "subtract[ing]" (*i.e.*, combining with reversed polarity) two signals that have "substantially equal magnitude and phase" as detected at the electrodes. J.A. 62.

lar magnitude with opposite polarity and thereby substantially remove them at the difference amplifier's output. The question whether that functional limitation inheres in the phrase "spaced relationship," or solely in other language within the claim, is of no practical import and creates no meaningful ambiguity regarding the scope of the claim as a whole. Thus, someone wishing to innovate around respondent's patent need not be stymied by uncertainty about whether the majority or concurring opinion is correct.[14]

Petitioner emphasizes (Br. 50-52) that this Court has invalidated patents that claimed an invention in purely functional terms. Although functional claims are objectionable when they sweep beyond the disclosure in the patent itself to encompass *every* apparatus that performs the recited function, see *The Incandescent Lamp Patent*, 159 U.S. 465, 476 (1895), some functional language in patent claiming is to be expected. Indeed, many ordinary nouns (*e.g.*, "fastener," "amplifier") denote classes of structures that perform particular functions. Nothing in the Patent Act precludes an inventor from describing an invention (and distinguishing it from the prior art) partly by reference to its function, provided that a skilled artisan can reasonably discern the

---

[14] By the same token, one might legitimately dispute whether two electrodes that are *more* than a hand's breadth apart are in a "spaced relationship" within the meaning of claim 1. Respondent's invention depends on the user's ability to grip both electrodes simultaneously with a single hand; yet it would seem odd to say that electrodes cease to be in a "spaced relationship" as they become farther separated. Again, however, that theoretical debate is of no practical significance. The claim as a whole unambiguously requires that the electrodes be close enough to be gripped with a single hand, whether or not the phrase "spaced relationship" imposes that limitation.

scope of the claimed invention. See *In re Schreiber*, 128 F.3d 1473, 1478 (Fed. Cir. 1997); see generally *PTO Definiteness Guidelines*, *supra*. Here, respondent did not claim *every* heart-rate monitor that causes EMG signal output to be substantially zero, but only a specific monitor equipped with specific circuitry to achieve that function. There was nothing improper about that approach.

3. The court of appeals suggested that respondent's patent may not "include disclosure sufficiently commensurate with the scope of the claims." Pet. App. 22a. As the court noted, however, any such deficiency would give petitioner a defense under 35 U.S.C. 112, ¶ 1, but not under the provision at issue here. Pet. App. 22a-23a. Petitioner implies (Br. 12-15) that respondent's invention is insufficiently different from the Fujisaki patent. Whether the claim language encompasses the prior art, however, would be a question not of definiteness under Section 112, ¶ 2, but of anticipation under 35 U.S.C. 102, or obviousness under 35 U.S.C. 103.

Petitioner has failed to establish that any ambiguity in the phrase "spaced relationship" in claim 1 of respondent's patent would prevent a person skilled in the relevant art from reasonably understanding the scope of the claim. The Court therefore should reject petitioner's indefiniteness challenge under Section 112.

CONCLUSION

The judgment of the court of appeals should be affirmed.

Respectfully submitted.

DONALD B. VERRILLI, JR.
Solicitor General
STUART F. DELERY
Assistant Attorney General
MALCOLM L. STEWART
Deputy Solicitor General
CURTIS E. GANNON
Assistant to the Solicitor General
MARK R. FREEMAN
DARA S. SMITH
Attorneys

NATHAN K. KELLEY
Solicitor
KRISTI L. R. SAWERT
STACY B. MARGOLIES
Associate Solicitors
United States Patent and Trademark Office

APRIL 2014

AMICUS CURIAE BRIEF

RECORD
AND
BRIEFS

Supreme Court, U.S.
FILED
FEB 2 8 2014
OFFICE OF THE CLERK

No. 13-369

In the Supreme Court of the United States

NAUTILUS, INC.,
Petitioner,

v.

BIOSIG INSTRUMENTS, INC.,
Respondent.

ON WRIT OF CERTIORARI
TO THE UNITED STATES COURT OF APPEALS
FOR THE FEDERAL CIRCUIT

BRIEF OF AMICUS CURIAE AARP IN SUPPORT OF PETITIONER

MICHAEL SCHUSTER
AARP
601 E Street, NW
Washington, DC 20049
(202) 434-2060
mschuster@aarp.org

BARBARA A. JONES*
**Counsel of Record*
AARP FOUNDATION
LITIGATION
200 So. Los Robles Ave.
Suite 400
Pasadena, CA 91101
(626) 585-2628
bjones@aarp.org

Counsel for Amicus Curiae AARP

Library of Congress
Law Library

TABLE OF CONTENTS

Page(s)

TABLE OF AUTHORITIES ii

INTEREST OF AMICUS CURIAE 1

SUMMARY OF THE ARGUMENT 2

ARGUMENT 3

I. The Federal Circuit's Tolerance of Ambiguous Patents Is Not in the Public Interest 3

II. The Federal Circuit's Standard For Claim Indefiniteness Conflicts With Both the Plain Language of the Patent Act and the Decisions of This Court 6

III. Ambiguous Patents Have a Chilling Effect on Scientific Research 8

IV. The Presumption of Validity Does Not Dilute A Patent Applicant's Duty to Clearly and Correctly Describe What He Has Invented 9

CONCLUSION 10

TABLE OF AUTHORITIES

CASES

Page(s)

Bancorp Servs., L.L.C. v. Hartford Life Ins. Co., 359 F.3d 1367 (Fed. Cir. 2004) 7

Eli Lilly & Co., v. Teva Parenteral Meds., Inc., 2012 U.S. Dist. LEXIS 85369 (S.D. Ind. 2012) 5

Energy Transp. Grp., Inc. v. William Demant Holding A/S, 697 F.3d 1342 (Fed. Cir. 2012), *cert. denied*, 133 S.Ct. 2010 (2013) 5

Exxon Res. & Eng'g. Co. v. United States, 265 F.3d 1371 (Fed. Cir. 2001) 6, 7

Hearing Components, Inc. v. Shure Inc., 600 F.3d 1357 (Fed. Cir. 2010) 4-5

Kinetic Concepts, Inc. v. Blue Sky Medical Grp., Inc., 554 F.3d 1010 (Fed. Cir. 2009) 5

KSR Int'l Co. v. Teleflex, Inc., 550 U.S. 398 (2007) 9

Markman v. Westview Instruments, Inc., 517 U.S. 370 (1996) 8

McNeil-PPC, Inc. v. L. Perrigo Co., 337 F.3d 1362 (Fed. Cir. 2003) 3

McNeil-PPC, Inc. v. L. Perrigo Co.,
207 F. Supp. 2d 356 (E.D. Pa. 2002) 3

Medtronic, Inc v. Mirowski Family Ventures, L.L.C., 134 S. Ct. 843 (2014).....3

Merrill v. Yeomans,
94 U.S. 568 (1876) 7

Precision Instrument Mfg. Co. v. Auto. Main. Mach. Co., 324 U. S. 806 (1945) 3

United Carbon Co. v. Binney & Smith Co.,
317 U.S. 228 (1942).....7

Wyeth v. Abbott Labs.,
2011 U.S. Dist. LEXIS 134479,
(D. N.J. 2011) 5

FEDERAL STATUTES & REGULATIONS

35 U.S.C. § 33 (1932).....7

35 U.S.C. § 112 (2011) 6, 7, 9, 10

35 U.S.C. § 282 (2011) 9

42 C.F.R. § 411.15 (2013) 4

OTHER AUTHORITIES

Jan Blustein, *Drug Coverage and Drug Purchases by Medicare Beneficiaries with Hypertension*, 19 Health Affairs 219 (2000) *available at* http://bit.ly/1l371My 3

Mildred K. Cho et al., *Effects Of Patents And Licenses On The Provision Of Clinical Genetic Testing Services*, 5 J. Molecular Diagnostics (2003) 8

Jen Christensen, *Hearing Loss an 'Invisible,' and Widely Uninsured, Problem*, CNN (Jul. 10, 2012), http://cnn.it/1g5nlqf 4

Fed. Trade Comm'n, *To Promote Innovation: The Proper Balance of Competition and Patent Law and Policy* (Oct. 2003), http://1.usa.gov/1d7fQwQ 9

Hearing Loss Ass'n of America, *Affordable Care Act (ACA) State Plans and Hearing Aids*, (last updated Aug. 2013), http://bit.ly/1bwnTZb 4

Brianna Lennon, *Antitrust Implications of Technology Patents*, 1 ABA Young Lawyer Div. Antitrust Law Comm. Newsletter (2012), http://bit.ly/1hhqFRX 6

Lichtman & Lemley, *Rethinking Patent Law's Presumption of Validity*, 60 Stan. L. Rev. 45 (2007) 9

Edward D. Manzo, *Patent Claim Construction in the Federal Circuit* (2012 ed.) 6

Jon F. Merz, *Disease Gene Patents: Overcoming Unethical Constraints on Clinical Laboratory Medicine*, 45 Clinical Chemistry 324 (1999) *available at* http://bit.ly/1gmvaYJ 8

Joshua D. Sarnoff & Edward D. Manzo, *Preface* to Manzo, *Patent Claim Construction in the Federal Circuit*, (forthcoming Mar. 2014 ed.) 6

U.S. Dept. Health & Human Serv., NIH Fact Sheet on Hearing Aids, http://1.usa.gov/1mfYNPe 4

MISCELLANEOUS

Julie Brill, Comm'r, Fed. Trade Comm'n, Keynote Address at the University of Colorado Law School Silicon Flatirons Center: The Intersection of Patent Law and Competition Policy (2012), http://1.usa.gov/1bPR5Fa 8

HHS, RFA-DC-12-003: Funding Opportunity Announcement, NIDCD Research On Hearing Health Care, (R21/R33CFDA) 93.173 (May 19, 2011) http://1.usa.gov/1c7zThz 4

INTEREST OF AMICUS CURIAE[1]

AARP is a nonpartisan, nonprofit organization, with a membership that helps people turn their goals and dreams into real possibilities, strengthens communities and fights for the issues that matter most to families, such as healthcare, employment and income security, retirement planning, affordable utilities and protection from financial abuse. AARP seeks through education, advocacy, and service to enhance the quality of life for all by promoting independence, dignity, and purpose. In its efforts to promote independence, AARP works to foster the health and economic security of individuals as they age by attempting to ensure the availability of quality and economical health coverage. As the country's largest membership organization, AARP advocates for access to affordable healthcare and for controlling costs without compromising quality.

The proliferation of patents has increased the cost of medical devices and healthcare. Access to affordable healthcare is particularly important to the older population, which has higher rates of chronic and serious health conditions. This Court's decision clarifying the amount of specificity required in a patent application will impact the cost of healthcare

---

[1] In accordance with Supreme Court Rule 37.6, AARP states that: (1) no counsel to a party authored this brief, in whole or in part; and (2) no person or entity, other than AARP, its members and its counsel have made a monetary contribution to the preparation or submission of this brief. Written consent of the parties has been obtained and will be filed with the Clerk of the Court pursuant to Supreme Court Rule 37.3.

and consumer products. In light of the significance of the issue presented in this case, AARP respectfully submits this amicus curiae brief in support of the petitioners.

SUMMARY OF THE ARGUMENT

Ambiguous patents undermine competition, with no offsetting benefit to consumers. For over a century, patent applicants have been required to particularly point out and distinctly claim their invention. The Patent Act's presumption of validity does not dilute the Act's requirements that inventors describe their work in clear and exact terms.

The Federal Circuit's "insolubly ambiguous" standard, extends the patent system beyond the limits that Congress has approved and should be rejected. The test impacts virtually all patents including patents on medical devices and biotechnology. The test threatens continued scientific, technological, and other advances and increases consumer costs for healthcare and other consumer products.

ARGUMENT

I. The Federal Circuit's Tolerance of Ambiguous Patents Is Not in the Public Interest.

The public has a "paramount interest in seeing that patent monopolies... are kept within their legitimate scope." *Medtronic, Inc. v. Mirowski Family Ventures, L.L.C.*, 134 S. Ct. 843, 851 (2014) (*citing Precision Instrument Mfg. Co. v. Auto. Main. Mach. Co.*, 324 U.S. 806, 816 (1945)). When patents are improperly granted "... competition in the marketplace is foreclosed and the public is forced to pay higher prices." *See McNeil-PPC, Inc. v. L. Perrigo Co.*, 337 F.3d 1362, 1368 (Fed. Cir. 2003) (quoting the District Court's opinion, *McNeil-PPC, Inc. v. L. Perrigo Co.*, 207 F. Supp. 2d 356, 375 (E.D. Pa. 2002).

When prices are elevated due to improperly granted patents the cost of healthcare is elevated to the detriment of individuals and the general public. There is specific empirical evidence that financial barriers compel many older Americans to forgo needed medical treatment. *See, e.g.*, Jan Blustein, *Drug Coverage and Drug Purchases by Medicare Beneficiaries with Hypertension*, 19 Health Affairs 219, 226 (2000), *available at* http://bit.ly/11371My (noting that high cost of prescription drugs compelled many older Americans to forgo needed drug treatment). While the Affordable Care Act has increased access to healthcare for many, older people and the American public still have significant

medical expenses. As an example, loss of hearing is a medical condition affecting 17 percent of American adults (37 million people) and nearly half of adults 75 and older.[2] However, hearing aids are neither covered by Medicare nor most private insurance companies. 42 C.F.R. § 411.15(d); Christensen, *supra* note 2. Likewise, coverage of hearing aids under Medicaid varies state to state with some states offering no coverage while others offer limited coverage. *See* Hearing Loss Ass'n of America, *Affordable Care Act (ACA) State Plans and Hearing Aids*, (last updated Aug. 2013). http://bit.ly/1bwnTZb. As a result, a "hearing aid wearer, over the wearer's lifetime, may spend tens of thousands of dollars acquiring and maintaining hearing aids." HHS, RFA-DC-12-003: Funding Opportunity Announcement, NIDCD Research On Hearing Health Care (R21/R33), CFDA 93.173 (May 19, 2011) at Part 2 §1, http://1.usa.gov/1c7zThz.

The Federal Circuit's "insolubly ambiguous" test has been used to exclude competing hearing aid products that are "readily installed and replaced by a user" even though the term "readily" is a subjective term lacking mathematical precision. *Hearing Components, Inc. v. Shure Inc.*, 600 F.3d 1357, 1366-67 (Fed. Cir. 2010) (holding that "the definiteness of

---

[2] U.S. Dept. Health & Human Serv., NIH Fact Sheet on Hearing Aids, http://1.usa.gov/1mfYNPe; Jen Christensen, *Hearing Loss an 'Invisible,' and Widely Uninsured, Problem*, CNN (Jul. 10, 2012), http://cnn.it/1g5nlqf.

claim terms depends on whether those terms can be given *any* reasonable meaning") (emphasis added).

The "insolubly ambiguous" test has further limited competition in healthcare beyond hearing aid components. *See, e.g., Kinetic Concepts, Inc. v. Blue Sky Medical Grp., Inc.*, 554 F.3d 1010, 1022 (Fed. Cir. 2009) (rejecting an argument that the term "selected stage of healing" was indefinite even though the definition was subjective and "the selected stage of healing may vary by wound"); *Eli Lilly & Co. v. Teva Parenteral Meds., Inc.*, 2012 U.S. Dist. LEXIS 85369, *10, *33 (S.D. Ind. 2012) (upholding the "insolubly ambiguous" test in a case concerning an anti-cancer agent, noting that claims are indefinite only if they are "not amenable to construction" or are "insolubly ambiguous"); *Wyeth v. Abbott Labs.*, 2011 U.S. Dist. LEXIS 134479, *15-16 (D. N.J. 2011) (noting that claims are definite even if reasonable persons disagree, as long as no narrowing construction can properly be adapted).

The cost of litigating ambiguous terms is exceedingly high to both businesses and consumers. *E.g., Energy Transp. Grp., Inc. v. William Demant Holding A/S*, 697 F.3d 1342, 1355-56 (Fed. Cir. 2012) *cert. denied*, 133 S.Ct. 2010 (2013) (upholding a multi-million dollar judgment in a hearing aid patent dispute). Unfortunately, the costs of patent litigation "are inevitably passed onto consumers, regardless of the outcome of the case." Brianna Lennon, *Antitrust Implications of Technology Patents*, 1 ABA Young Lawyer Div. Antitrust Law Comm. Newsletter, 8, 9 (2012), *available at* http://bit.ly/1hhqFRX. Strict

compliance with 35 U.S.C. § 112 would reduce ambiguity and the litigation that flows from ambiguous terms.

II. The Federal Circuit's Standard For Claim Indefiniteness Conflicts With Both the Plain Language of the Patent Act and the Decisions of This Court.

The Patent Act mandates that patent specifications "...conclude with one or more claims particularly pointing out and distinctly claiming the subject matter which the applicant regards as his invention." 35 U.S.C. § 112(b). This rule has been in effect as early as 1870. Edward D. Manzo, *Patent Claim Construction in the Federal Circuit*, §2:23 n.1 (2012 ed.). Construing patent claims is critical to nearly every patent case. "Yet despite its monumental importance, patent claim construction remains one of the most confusing and difficult tasks undertaken by federal district judges." Joshua D. Sarnoff & Edward D. Manzo, *Preface* to Manzo, *Patent Claim Construction in the Federal Circuit*, Manuscript 7 (forthcoming Mar. 2014 ed.). The Federal Circuit has held that claims are "not indefinite" if they are "amenable to construction, however difficult that task may be." *Exxon Res. & Eng'g. Co. v. United States*, 265 F.3d 1371, 1375 (Fed. Cir. 2001) (holding that ambiguous claims are permissible as long as they are not "insolubly ambiguous, and no narrowing construction can be properly adopted."). Moreover, the Federal Circuit has held that even if reasonable persons disagree about the scope of the claims that should not render

the claims indefinite. *Id.* This loosely defined standard allows for significant ambiguity contrary to the mandates of this Court. *Compare Bancorp Servs., L.L.C. v. Hartford Life Ins. Co.*, 359 F.3d 1367, 1373-74 (Fed. Cir. 2004) (upholding patent by equating patent term "surrender value protected investment" with term "stable value protected investment" while acknowledging the patent uses the two terms in different ways and reflects "poor drafting practice."), *with United Carbon Co. v. Binney & Smith Co.*, 317 U.S. 228, 236-37 (1942) (holding that "the statutory requirement of particularity and distinctness in claims is met only when they clearly distinguish what is claimed from what went before in the art and clearly circumscribe what is foreclosed from future enterprise ... An invention must be capable of accurate definition, and it must be accurately defined, to be patentable.")[3] *See also, Merrill v. Yeomans*, 94 U.S. 568, 573 (1876).

The "insolubly ambiguous" standard is inconsistent with the text and purpose of the Patent Act and this Court's precedent. *See United Carbon Co.* 317 U.S. at 236-37; 35 U.S.C. § 112. Courts should strictly enforce the stringent definiteness standard. Patent claims should be enforced only when the claims are clear enough that skilled artisans can identify their scope without litigation.

---

[3] *United Carbon Co.* involved an interpretation of the precursor to Section 112(b), 35 U.S.C. § 33 (1932), which included the parallel requirement of claims that "particularly point out and distinctly claim the part, improvement or combination which he claims as his invention or discovery." *United Carbon Co.*, 317 U.S. at 232.

Markman v. Westview Instruments, Inc., 517 U.S. 370, 390 (1996) (noting that uncertainty discourages invention).

III. Ambiguous Patents Have a Chilling Effect on Scientific Research.

A questionable patent "may lead a competitor to forgo research and development in an area the patent supposedly covers, deterring follow-on innovation and new market entry." Julie Brill, Comm'r, Fed. Trade Comm'n, Keynote Address at the University of Colorado Law School Silicon Flatirons Center: The Intersection of Patent Law and Competition Policy, at 2 (2012), http://1.usa.gov/1bPR5Fa.

The proliferation of patents has blocked biomedical research. *See, e.g.*, Mildred K. Cho et al., *Effects Of Patents And Licenses On The Provision Of Clinical Genetic Testing Services*, 5 J. Molecular Diagnostics 3 (2003) (noting that more than half of laboratory directors in a survey decided not to develop or perform tests specifically because of intellectual property considerations). The "knowledge that a patent application has been filed can influence the decision to spend the time and resources to develop a clinical test because of the uncertain risk that a patent holder will later prevent the laboratory from continuing to provide this service." Jon F. Merz, *Disease Gene Patents: Overcoming Unethical Constraints on Clinical Laboratory Medicine*, 45 Clinical Chemistry 324, 327 (1999), *available at* http://bit.ly/1gmvaYJ.

IV. The Presumption of Validity Does Not Dilute A Patent Applicant's Duty to Clearly and Correctly Describe What He Has Invented.

The presumption of validity mandated by the Patent Act does not eviscerate a patent applicant's duty to clearly and correctly describe what he has invented and what exactly he is claiming. 35 U.S.C. § 112; 35 U.S.C. § 282 (b)(3)(A). Clarity is particularly important since the United States Patent and Trademark Office's determinations supporting the issuance of patents "...are reached under tight time constraints and on an *ex parte* basis allowing minimal opportunity to hear a third party's opposing views." Fed. Trade Comm'n, *To Promote Innovation: The Proper Balance of Competition and Patent Law and Policy* ch. 5, at 28 (Oct. 2003), http://1.usa.gov/1d7fQwQ; *see also*, Lichtman & Lemley, *Rethinking Patent Law's Presumption of Validity*, 60 Stan. L. Rev. 45 (2007).

The presumption of validity can and should be curtailed in appropriate circumstances. *See e.g.*, U.S.C. § 282 (b); *see also*, *KSR Int'l Co. v. Teleflex, Inc.*, 550 U.S. 398, 426 (2007) ("We nevertheless think it appropriate to note that the rationale underlying the presumption – that the PTO, in its expertise, has approved the claim – seems much diminished" where the examiners had not considered the art in question.).

CONCLUSION

For the foregoing reasons, AARP respectfully urges the Court to grant the relief requested by petitioner; reject the Federal Circuit's "insolubly ambiguous" standard and mandate that patents strictly comply with 35 U.S.C. § 112.

Respectfully submitted,

Michael Schuster
AARP
601 E Street, NW
Washington, DC 20049
(202) 434-2060
mschuster@aarp.org

Barbara A. Jones*
*Counsel of Record
AARP Foundation
Litigation
200 So. Los Robles Ave.
Suite 400
Pasadena, CA 91101
(626) 585-2628
bjones@aarp.org

February 28, 2014

AMICUS CURIAE BRIEF

RECORD AND BRIEFS

No. 13-369

Supreme Court, U.S.
FILED
MAR 3 - 2014
OFFICE OF THE CLERK

IN THE
Supreme Court of the United States

NAUTILUS, INC.,
Petitioner,
v.
BIOSIG INSTRUMENTS, INC.,
Respondent.

On Writ of Certiorari to the United States Court of Appeals for the Federal Circuit

BRIEF OF AMAZON.COM, INC., CISCO SYSTEMS, INC., DELL INC., ESRI, GARMIN INTERNATIONAL, INC., GOOGLE INC., J.C. PENNEY CORPORATION, INC., LIMELIGHT NETWORKS, INC., NETFLIX, INC., NEWEGG INC., RED HAT, INC., SAP AMERICA, INC., SAS INSTITUTE INC., AND VERIZON COMMUNICATIONS INC. AS *AMICI CURIAE* IN SUPPORT OF PETITIONER

JEFFREY H. DEAN
ASSOCIATE GENERAL COUNSEL, LITIGATION & REGULATORY
AMAZON.COM, INC.
440 Terry Avenue North
Seattle, WA 98109-5210
(206) 740-0521

SUZANNE MICHEL
SENIOR PATENT COUNSEL
GOOGLE INC.
1101 New York Avenue, N.W.
Washington, D.C. 20005
(202) 346-1373

JOHN THORNE
Counsel of Record
AARON M. PANNER
JUDD E. STONE
KELLOGG, HUBER, HANSEN, TODD, EVANS & FIGEL, P.L.L.C.
1615 M Street, N.W.
Suite 400
Washington, D.C. 20036
(202) 326-7900
(jthorne@khhte.com)

March 3, 2014

(Additional Counsel Listed On Inside Cover)

Library of Congress
Law Library

DAN LANG
CHRISTA ZADO
CISCO SYSTEMS, INC.
170 W. Tasman Drive
San Jose, CA 95134
(408) 525-2337

LAURA COLEMAN
ANTHONY PETERMAN
MARC VOCKELL
MICHELE CONNORS
DELL INC.
One Dell Way
Round Rock, TX 78682
(512) 723-4208

ZION MAFFEO
ESRI
380 New York Street
Redlands, CA 92373
(909) 793-2853

ANDREW R. ETKIND
VICE PRESIDENT AND
GENERAL COUNSEL
GARMIN INTERNATIONAL, INC.
1200 E. 151st Street
Olathe, KS 66062
(913) 397-8200

DIANE K. LETTELLEIR
SENIOR MANAGING COUNSEL
LITIGATION
J.C. PENNEY CORPORATION,
INC.
6501 Legacy Drive, MS 1122
Plano, TX 75024
(972) 431-5012

DION MESSER
SR. IP CORPORATE COUNSEL
LIMELIGHT NETWORKS, INC.
222 South Mill Avenue
8th Floor
Tempe, AZ 85281
(602) 850-4833

ISAAC PETERSON
PATENT LITIGATION COUNSEL
NETFLIX, INC.
100 Winchester Circle
Los Gatos, CA 95032
(408) 540-3700

LEE C. CHENG
CHIEF LEGAL OFFICER
NEWEGG INC.
16839 E. Gale Avenue
City of Industry, CA 91745
(626) 271-9700

ROBERT H. TILLER
DAVID B. PERRY
RED HAT, INC.
100 East Davie Street
Raleigh, NC 27601
(919) 754-4232

SAMIR N. PANDYA
SENIOR IP COUNSEL
SAP – GLOBAL LITIGATION
GROUP
3999 West Chester Pike
Newtown Square, PA 19073
(610) 661-9767

TIMOTHY K. WILSON
SENIOR IP COUNSEL
SAS INSTITUTE INC.
701 SAS Campus Drive
Cary, NC 27513
(919) 531-3240

GAIL LEVINE
KEVIN PARTON
VERIZON COMMUNICATIONS INC.
1300 I Street, N.W.
Washington, D.C. 20005
(202) 515-2552

QUESTIONS PRESENTED

The patent statute requires patent claims to be "definite"—the application must "particularly point[] out and distinctly claim[] the subject matter which the applicant regards as his invention." 35 U.S.C. § 112, ¶ 2.* The Federal Circuit holds that this requirement is met so long as a court can find that a claim has some discernible meaning and that it is not "insolubly ambiguous," even when the claim is capable of multiple reasonable interpretations. Pet. App. 21a-22a.

The questions presented are:

Whether the Federal Circuit's "insolubly ambiguous" standard is compatible with the text and purpose of § 112 as interpreted by this Court; and

Whether the Federal Circuit's "insolubly ambiguous" standard is compelled by the statutory presumption that patents are valid.

---

* Paragraph 2 of 35 U.S.C. § 112 was replaced with the redesignated § 112(b) by the Leahy-Smith America Invents Act, Pub. L. No. 112-29, § 4(c), 125 Stat. 284, 296 (2011). Cites in this brief are to the pre-AIA version of the provision applied below. Pet. App. 12a n.8.

TABLE OF CONTENTS

Page

QUESTIONS PRESENTED i

TABLE OF AUTHORITIES iv

INTEREST OF *AMICI CURIAE* 1

INTRODUCTION 1

SUMMARY OF ARGUMENT 3

ARGUMENT 4

I. PATENT INDEFINITENESS IS A GROWING PROBLEM OF NATIONAL ECONOMIC IMPORTANCE 4

A. Vague Claims Tax and Deter Innovation 4

B. Vague Claims Fuel Socially Harmful Litigation 7

II. THE FEDERAL CIRCUIT'S PERMISSIVE STANDARD DISTORTS PATENTEE BEHAVIOR AT THE PATENT OFFICE 12

III. THE PROBLEM OF INDEFINITENESS SHOULD BE ADDRESSED BY ENFORCING THE STATUTE AND THIS COURT'S PRECEDENTS REQUIRING CLAIMS TO BE CLEAR TO A PERSON OF ORDINARY SKILL IN THE ART AT THE TIME THE PATENT ISSUES 16

A. Clarity Is Required When the Patent Issues 18

B. The Claim Must Be Distinct, Not Unclear or Ambiguous, to a Person of Ordinary Skill in the Art 20

C. A "Functional" Construction Cannot Resolve Indefiniteness 21

IV. THE PRESUMPTION OF VALIDITY DOES NOT APPLY TO QUESTIONS OF LAW OR OTHERWISE JUSTIFY EXTRAORDINARY EFFORTS TO SALVAGE INDEFINITE CLAIMS 25

CONCLUSION 27

TABLE OF AUTHORITIES

Page

CASES

Datamize, LLC v. Plumtree Software, Inc., 417 F.3d 1342 (Fed. Cir. 2005) 17-18

eBay Inc. v. MercExchange, L.L.C., 547 U.S. 388 (2006) 10

Enzo Biochem, Inc. v. Applera Corp., 605 F.3d 1347 (Fed. Cir. 2010) 15, 16

Evans v. Eaton, 20 U.S. (7 Wheat.) 356 (1822) 17

Exxon Research & Eng'g Co. v. United States, 265 F.3d 1371 (Fed. Cir. 2001) 17, 25

FCC v. Fox Television Stations, Inc., 132 S. Ct. 2307 (2012) 20

Festo Corp. v. Shoketsu Kinzoku Kogyo Kabushiki Co., 535 U.S. 722 (2002) 17, 26

Fisher, In re, 307 F.2d 948 (C.C.P.A. 1962) 23, 24

General Elec. Co. v. Wabash Appliance Corp., 304 U.S. 364 (1938) 23, 24

Graham v. John Deere Co., 383 U.S. 1 (1966) 2

Halliburton Energy Servs., Inc. v. M-I LLC, 514 F.3d 1244 (Fed. Cir. 2008) 25

Halliburton Oil Well Cementing Co. v. Walker, 329 U.S. 1 (1946) 7, 22, 23, 24

Holland Furniture Co. v. Perkins Glue Co., 277 U.S. 245 (1928) 22

Ibormeith IP, LLC v. Mercedes-Benz USA, LLC, 732 F.3d 1376 (Fed. Cir. 2013) 22, 25, 26

Lighting Ballast Control LLC v. Philips Elecs. N. Am. Corp., No. 2012-1014, 2014 WL 667499 (Fed. Cir. Feb. 21, 2014) 26

Markman v. Westview Instruments, Inc., 517 U.S. 370 (1996) 3, 18, 26, 27

Mayo Collaborative Servs. v. Prometheus Labs., Inc., 132 S. Ct. 1289 (2012) 6-7

Medtronic, Inc. v. Mirowski Family Ventures, LLC, 134 S. Ct. 843 (2014) 12

Merrill v. Yeomans, 94 U.S. 568 (1877) 3, 8, 9, 17, 18, 25

Microsoft Corp. v. i4i Ltd. P'ship, 131 S. Ct. 2238 (2011) 26

O'Reilly v. Morse, 56 U.S. (15 How.) 62 (1854) 7

Oetiker, In re, 977 F.2d 1443 (Fed. Cir. 1992) 13

Radio Corp. of Am. v. Radio Eng'g Labs., Inc., 293 U.S. 1 (1934) 25

Swinehart, In re, 439 F.2d 210 (C.C.P.A. 1971) 23

United Carbon Co. v. Binney & Smith Co., 317 U.S. 228 (1942) 26

Universal Oil Prods. Co. v. Globe Oil & Ref. Co., 322 U.S. 471 (1944) 19-20

White v. Dunbar, 119 U.S. 47 (1886).....17, 20

ADMINISTRATIVE DECISIONS

Ex parte Miyazaki, No. 2007-3300, 2008 WL 5105055 (B.P.A.I. Nov. 19, 2008) 12

CONSTITUTION, STATUTES, AND RULES

U.S. Const.:

art. I, § 8, cl. 8 1

art. III 14, 15

Patent Act (35 U.S.C.):

§ 111(a)(2)(A) 16

§ 112 ..... 1, 2, 11, 12, 14, 16, 22, 26

Sup. Ct. R:

Rule 37.3(a) 1

Rule 37.6 1

ADMINISTRATIVE MATERIALS

Executive Office of the President, *Patent Assertion and U.S. Innovation* (June 2013), *available at* http://www.whitehouse.gov/sites/default/files/docs/patent_report.pdf 10, 11

Federal Trade Comm'n, *The Evolving IP Marketplace: Aligning Patent Notice and Remedies with Competition* (Mar. 2011), *available at* http://www.ftc.gov/os/2011/03/110307patentreport.pdf 4, 5, 7

Gov't Accountability Office, *Intellectual Property: Assessing Factors That Affect Patent Infringement Litigation Could Help Improve Patent Quality* (Aug. 2013), *available at* http://www.gao.gov/assets/660/657103.pdf ... 9, 10, 11

Patent & Trademark Office, Manual of Patent Examining Procedure (8th ed. rev. 9, Aug. 2012) 12, 13

White House, *FACT SHEET – Executive Actions: Answering the President's Call to Strengthen Our Patent System and Foster Innovation* (Feb. 20, 2014), *available at* http://www.whitehouse.gov/the-press-office/2014/02/20/fact-sheet-executive-actions-answering-president-s-call-strengthen-our-p 13

OTHER MATERIALS

John R. Allison & Mark A. Lemley, *Empirical Evidence on the Validity of Litigated Patents*, 26 AIPLA Q.J. 185 (1998) 15

James Bessen & Michael J. Meurer, *Patent Failure: How Judges, Bureaucrats, and Lawyers Put Innovators At Risk* (2008) 6, 14

Christina Bohannan & Herbert Hovenkamp, *Creation without Restraint: Promoting Liberty and Rivalry in Innovation* (2012) 8, 14, 19, 21

Dan L. Burk & Mark A. Lemley, *The Patent Crisis and How the Courts Can Solve It* (2009) 13

2 *Century Dictionary* (1897) 20

Ronald H. Coase, *The Problem of Social Cost*, 3 J.L. & Econ. 1 (1960) 12

Harold Demsetz, *Toward a Theory of Property Rights*, 57 Am. Econ. Rev. 347 (1967) 8

Roberto Fontana et al., *Reassessing Patent Propensity: Evidence from a Data-Set of R&D Awards, 1977-2004*, Working Papers 2013/09 (2013), *available at* http://pascal.iseg.utl.pt/~depeco/wp/wp092013.pdf 9

Herbert Hovenkamp:

Competition for Innovation, 2012 Colum. Bus. L. Rev. 799 8

Innovation and the Domain of Competition Policy, 60 Ala. L. Rev. 103 (2008) 7-8

Samuel Johnson, *Dictionary of the English Language* (3d ed. 1768) 20

William M. Landes & Richard A. Posner, *The Economic Structure of Intellectual Property Law* (2003) 5, 7

Christa J. Laser, *A Definite Claim on Claim Indefiniteness: An Empirical Study of Definiteness Cases of the Past Decade with a Focus on the Federal Circuit and the Insolubly Ambiguous Standard*, 10 Chi.-Kent J. Intell. Prop. 25 (2010) 15

Litigations Over Time, PatentFreedom.com (Feb. 7, 2014), https://www.patentfreedom.com/about-npes/litigations/ 10

Stephen M. McJohn, *Patents: Hiding From History*, 24 Santa Clara Computer & High Tech. L.J. 961 (2008) 14-15

Lee Petherbridge, *On the Development of Patent Law*, 43 Loy. L.A. L. Rev. 893 (2010) 14

Michael Risch, *The Failure of Public Notice in Patent Prosecution*, 21 Harv. J.L. & Tech. 179 (2007) 14

F.M. Scherer, *New Perspectives on Economic Growth and Technological Innovation* (1999) 6

R. Polk Wagner, *Understanding Patent-Quality Mechanisms*, 157 U. Pa. L. Rev. 2135 (2009) 14

INTEREST OF *AMICI CURIAE*[1]

Amici are some of America's leading technology companies. Collectively, they have invested billions of dollars in research and development, and employ almost one million people, including many of the world's most innovative computer scientists and engineers. Their worldwide contributions in technology and commerce have transformed society in countless ways. Precisely because of their size and commercial success (the combined public market capitalization of *amici* is approximately $1 trillion), they are constant targets in costly patent-infringement litigation involving vague patents of indefinite scope.

INTRODUCTION

The Court should reverse the decision below because the Federal Circuit's interpretation of § 112, ¶ 2 of the Patent Act is incompatible with the statute's text and purpose—to say nothing of Congress's constitutional power to advance science and the useful arts. U.S. Const. art. I, § 8, cl. 8. That interpretation is responsible for a blight of vague patents that has spawned an entire industry of opportunistic patent speculators—dissociated from the creation or productive use of technology—that parlays the information (and associated transaction) costs of vague patents into dead-weight taxes on America's

---

[1] Pursuant to Supreme Court Rule 37.6, counsel for *amici* represent that they authored this brief in its entirety and that none of the parties or their counsel, nor any other person or entity other than *amici* or their counsel, made a monetary contribution intended to fund the preparation or submission of this brief. Pursuant to Rule 37.3(a), counsel for *amici* represent that all parties have consented to the filing of this brief. Both petitioner and respondent have filed a letter granting blanket consent to the filing of *amicus* briefs.

most innovative and productive citizens. Nothing could be more anathema to a defensible patent system —especially one, like ours, conceived by a people who had so long groaned under the crush of abusive monopolies granted by the Crown. *Graham v. John Deere Co.*, 383 U.S. 1, 5-11 (1966). Vague patents that fail to define the metes and bounds of what they exclude from the public are a scourge of innovative companies. If a patent, as defined by the claims, is not clear and understandable to persons of ordinary skill in the art, it creates unacceptable uncertainty and incalculable social costs. The Federal Circuit's interpretation distorts incentives for inventors, taxes future innovation, and creates a host of other social costs that are borne daily by the public.

The Federal Circuit's standard sustains patent claims unless they are either "not amenable to construction or insolubly ambiguous." Pet. App. 13a (internal quotations omitted). That standard cannot be squared with—indeed, is the antithesis of—the statute's express mandate that a patent applicant "particularly point[] out and distinctly claim[]" his or her invention. 35 U.S.C. § 112, ¶ 2. As a result (*see* Pet. App. 21a-22a), countless patents are enforced daily against the public even when the claims are conceded by all to be "ambiguous" (*i.e.*, susceptible to different meanings "over which reasonable persons will disagree"), and not just ambiguous, but "almost insolubly ambiguous," thus requiring heroic or "formidable" efforts to discern any meaning.

But a claim that is "particular and distinct" cannot be ambiguous by definition. By turning § 112, ¶ 2 on its head, the Federal Circuit's standard undermines the very purpose of the statute—namely, to ensure that a patent's scope is clear when it issues so that

"'[t]he public [is not] deprived of rights supposed to belong to it, without being clearly told what it is that limits these rights.'" *Markman v. Westview Instruments, Inc.*, 517 U.S. 370, 390 (1996) (quoting *Merrill v. Yeomans*, 94 U.S. 568, 573 (1877)).

SUMMARY OF ARGUMENT

The Court should reverse the Federal Circuit's "insolubly ambiguous" standard and hold that a patent fails the particular-and-distinct-claiming requirement if an ordinarily skilled artisan, reading the patent, cannot reasonably understand what it excludes from the public, either because the patent has no clear meaning or because the patent is ambiguous, having multiple meanings. In the experience of *amici*, corroborated by findings of the Federal Trade Commission, the Government Accountability Office, the President, and numerous scholars, the Federal Circuit's failure to enforce the statute's particular-and-distinct-claiming requirement has deterred innovation and encouraged abusive litigation.

ARGUMENT

I. PATENT INDEFINITENESS IS A GROWING PROBLEM OF NATIONAL ECONOMIC IMPORTANCE

The Federal Circuit's failure to enforce the Patent Act's requirement that a patent applicant "particularly point[] out and distinctly claim[]" his or her invention fuels two of the more urgent and important problems affecting our patent system. First, failure to insist on clear patents taxes and deters the very investment in innovation that our patent laws are intended to promote. Second, permitting enforcement of concededly ambiguous patents invites litigation that is unrelated to the protection of any inventor's true contribution to the advancement of science and the useful arts.

A. Vague Claims Tax and Deter Innovation

Government agencies and scholars—confirming the experience of real-world innovators like *amici*—have warned that the growing problem of indefinite patents deprives the public of notice and undermines innovation. The "first" problem identified by the Federal Trade Commission's recent study of how patent abuse is harming innovation is the failure of many patents to provide public "notice . . . of what technology is protected." FTC, *The Evolving IP Marketplace: Aligning Patent Notice and Remedies with Competition* 2 (Mar. 2011), *available at* http://www.ftc.gov/os/2011/03/110307patentreport.pdf. Following a three-year study, including multiple hearings involving participants representing diverse interests, the FTC found that clear notice of claim scope "is essential for patents to operate as a property system." *Id.* at 74. "Effective notice fosters efficient innovation investment by enabling firms to select technolo-

gies with knowledge of applicable patent rights. It removes uncertainty, which causes some firms to shy away from pro-competitive innovation for fear of the penumbra that surrounds a patent's actual reach, and which induces others to engage unnecessarily in costly design-around efforts." *Id.* at 134. "[W]hen patents provide clear notice of their boundaries . . . parties [are able] to contract efficiently, with confidence as to the technology rights that are conveyed, facilitating both collaboration among firms with complementary expertise and competition among inventions in technology markets." *Id.* at 74.

Conversely, "[p]oor patent notice undermines innovation and competition by raising the risk of . . . infringement and imposing 'a very high overhead' on innovation." *Id.* at 76 (citation omitted). "Poor patent notice may cause firms to cut back on pro-competitive innovation, reducing competitive vigor and depriving consumers of new technologies. Firms reduce their R&D expenditures in the face of increased uncertainty." *Id.* at 77. At the very least, poorly defined patents force firms to incur unnecessary costs—both information and transaction costs—further "burdening innovative activities and raising prices" charged to consumers. *Id.* at 78. And, of course, even for firms whose commitment to innovation remains undeterred by ambiguous patents, litigation diverts large sums of otherwise useful resources and capital away from further investment in new production.[2]

---

[2] The academic literature anticipates the FTC's findings. *See* William M. Landes & Richard A. Posner, *The Economic Structure of Intellectual Property Law* 324 (2003) ("[A]n indefinite claim would tend to enlarge the practical scope of the patent beyond its lawful bounds by imposing legal risks on competi-

The problem is not just that an unwitting citizen will stumble across an unclear boundary and be taxed with the cost of a lawsuit and the risk of a large jury award or an injunction. Ambiguous patents deter investments in new innovations in adjacent areas. James Bessen & Michael J. Meurer, *Patent Failure: How Judges, Bureaucrats, and Lawyers Put Innovators At Risk* 219 (2008) ("Our empirical analysis has shown that poor patent notice has reduced the incentives to invent."). The patent system has long been understood to advance science and the useful arts in two equally important ways. On the one hand, the patent laws protect an inventor's investment in specific technology against free riding. On the other, the patent laws incentivize the public (and protect its right) to solve the same problem in better and more efficient ways. Both engines of innovation are of equal importance to the proper functioning of our patent system. Enforcing ambiguous patents over-rewards the first engine of innovation while depriving the public of the important benefits of the second.

The same concern about preserving incentives for future innovation underlies the patent law's refusal to allow patents on abstract ideas or that claim all ways of achieving a desired result (*i.e.*, "functional" patents). Such patents "inhibit future innovation" and needlessly "foreclose[] more future invention than the underlying discovery could reasonably justify." *Mayo Collaborative Servs. v. Prometheus Labs., Inc.*,

---

tors, who would be buying an infringement suit if they mistook those bounds because the patent claim was unclear."); F.M. Scherer, *New Perspectives on Economic Growth and Technological Innovation* 87 (1999) (Federal Circuit decisions tolerating indefinite patents "make innovation more dangerous—indeed, much like walking through a mine field").

132 S. Ct. 1289, 1301 (2012); *see O'Reilly v. Morse*, 56 U.S. (15 How.) 62, 112-13 (1854) (rejecting claim to all machines for writing or printing at a distance using "electric or galvanic current" to avoid deterring "some future inventor, in the onward march of science, [who] may discover a mode of writing or printing at a distance by means of the electric or galvanic current, without using [Morse's specific invention]," and whose "invention may be less complicated—less liable to get out of order—less expensive in construction, and in its operation").

The problem of excessive foreclosure is particularly acute with vague software patents. *Amici* have experienced, and the FTC has confirmed, that such patents often fail to set forth well-defined boundaries and may describe only a problem to be solved or a result to be obtained. "General statements" of desired results "that fail to explain how the computer performs the claimed functions may leave the outer boundaries of the claim difficult to decipher." FTC, *The Evolving IP Marketplace* 100 (citing *Halliburton Oil Well Cementing Co. v. Walker*, 329 U.S. 1, 12 (1946), and noting that the Court's decision "warn[ed] about the potential ambiguity of functional claims").

B. Vague Claims Fuel Socially Harmful Litigation

Tolerating ambiguous patents encourages litigation in two ways. First, litigation is needed to resolve the ambiguity and establish the boundaries of the patent claim; second, uncertainty over claim scope itself makes litigation more likely.[3] Waiting years and

---

[3] Landes & Posner, *The Economic Structure of Intellectual Property Law* 347 ("Other things being equal, the more certain law is, the less likely is litigation."); Herbert Hovenkamp, *Innovation and the Domain of Competition Policy*, 60 Ala. L.

spending millions of dollars in litigation to find out what a low-value patent covers is precisely the situation where the property right may not be worth creating in the first place.[4]

Indefiniteness is becoming an even greater problem as more patents, especially vague and functional software patents, are issued by the Patent and Trademark Office and more extant patents are being enforced by patent-assertion entities ("PAEs"). This Court noted in 1877 that "[t]he growth of the patent system ... ha[d] reached a stage in its progress where the variety and magnitude of the interests involved require accuracy, precision, and care in the preparation of all the papers on which the patent is founded." *Merrill v. Yeomans*, 94 U.S. 568, 573 (1877). By 1877, the Patent Office had been in oper-

---

Rev. 103, 121 (2008) ("[T]he more poorly patent boundaries are defined, the higher are litigation costs in relation to patent value."); Christina Bohannan & Herbert Hovenkamp, *Creation without Restraint: Promoting Liberty and Rivalry in Innovation* 131-32 (2012) ("[K]nowing whether one's own technology infringes [a patent] is often a question of interpretation, and the more abstraction we permit, the greater this problem is. Indeed, the high reversal rate of claim construction jury verdicts (about one in three) indicates the extent to which it is possible to read a patent carefully, with the aid of lawyers on both sides, and still not know precisely what it covers.").

[4] Harold Demsetz, *Toward a Theory of Property Rights*, 57 Am. Econ. Rev. 347, 350-53 (1967) (when costs of enforcing property rights are disproportionate to the value of the rights, the social value of the rights will be slight or even negative); Herbert Hovenkamp, *Competition for Innovation*, 2012 Colum. Bus. L. Rev. 799, 826-27 ("[T]he patent system has not taken the social value of notice seriously. In general, the more intangible a property right is, and the more ambiguous its boundaries, the more important it is that notice be provided. Further, the cost of providing notice of a particular property right is almost always less than the cost of searching among many.").

ation 40 years and had issued a total of 100,000 patents. Even with a patent system of that modest scale, the Court remarked that there could be "no excuse for ambiguous language or vague descriptions. The public should not be deprived of rights supposed to belong to it, without being clearly told what it is that limits these rights." *Id.* Today, more than eight and a half million patents have issued and more than two million of them are unexpired and remain in effect. The Patent Office issued 277,861 additional patents last year, a 10% jump over the prior year's record. Remarkably, more than half of these new patents relate to software, precisely the patents that are most likely to have indefinite scope, creating problems for years to come. Gov't Accountability Office, *Intellectual Property: Assessing Factors That Affect Patent Infringement Litigation Could Help Improve Patent Quality* 13 (Aug. 2013) ("By 2011 patents related to software made up more than half of all issued patents."), *available at* http://www.gao.gov/assets/660/657103.pdf.[5]

---

[5] By contrast, empirical evidence indicates that many of the most important innovations are *un*patented. A study of the top 100 industrial innovations worldwide each year, from 1977 to 2004, showed that more than 90% were not patented. Roberto Fontana et al., *Reassessing Patent Propensity: Evidence from a Data-Set of R&D Awards, 1977-2004*, Working Papers 2013/09, at 28, tbl. 9 (2013). Yet those who successfully conceive, develop, and invest in such innovations bear much of the social costs of indefinite patents.

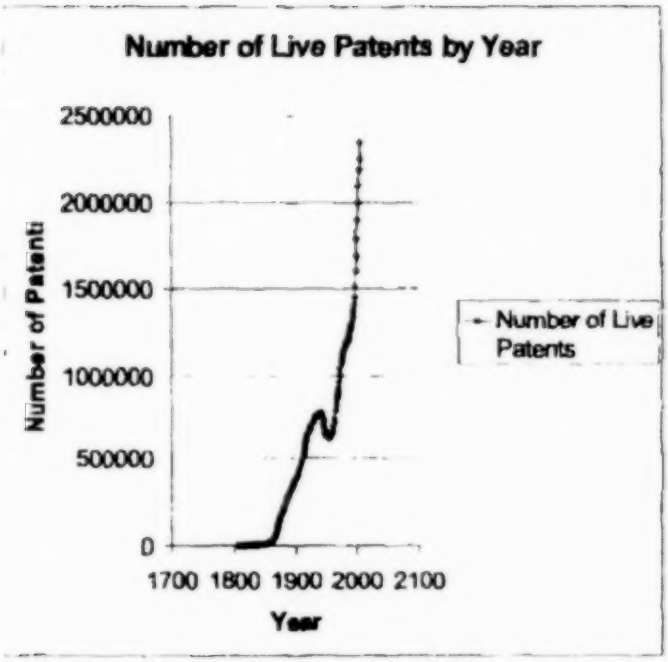

More of these vague patents are being asserted in lawsuits attacking vast swaths of American commerce. Justice Kennedy noted in *eBay Inc. v. MercExchange, L.L.C.*, 547 U.S. 388 (2006), that "[a]n industry has developed in which firms use patents not as a basis for producing and selling goods but, instead, primarily for obtaining licensing fees." *Id.* at 396 (Kennedy, J., concurring). Between the year *eBay* was decided and 2011, the number of defendants sued by PAEs quadrupled. *Litigations Over Time*, PatentFreedom.com (Feb. 7, 2014), https://www.patentfreedom.com/about-npes/litigations/; GAO, *Intellectual Property* 18-19 (reporting that the number of defendants sued by PAEs grew from 834 in 2007 to 3,401 in 2011). In the past two years, suits brought by PAEs have tripled, rising from 29% to 62% of all infringement suits. Executive Office of the President, *Patent Assertion and U.S. Innovation* 1 (June 2013), *available at* http://www.whitehouse.gov/sites/default/files/docs/patent_report.pdf. "Estimates

suggest that PAEs may have threatened over 100,000 companies with patent infringement last year alone." *Id.*

The problem is growing particularly acute for companies like *amici*. "PAEs take advantage of uncertainty about the scope or validity of patent claims, especially in software-related patents [where] . . . it has been difficult to separate the 'function' of the software (e.g. to produce a medical image) from the 'means' by which that function is accomplished." *Id.* About 84% of patent lawsuits filed between 2007 and 2011 by "patent monetization entities" involved software patents. GAO, *Intellectual Property* 22. The GAO blames the increase in patent litigation in large part on "patents with unclear property rights, overly broad claims, or both," in particular "claims in software-related patents [that] are often overly broad, unclear or both." *Id.* at 28.[6]

The increase of PAE litigation goes hand-in-hand with the Federal Circuit's misinterpretation of § 112, ¶ 2. The uncertain claim scope allowed under an "insolubly ambiguous" standard allows for more brazen litigation positions and creates greater threats of uncertainty while the courts struggle to discern some meaning in an ambiguous claim.

---

[6] The GAO found that "functional claims and other overly broad claims may allow patent owners who sue for infringement to argue in court that their patent covers (1) an entire technology when it may only cover a small improvement, or (2) future technologies that their patent did not originally intend to cover. For example, representatives from one [patent monetization entity] we spoke with said they had successfully sued companies for infringement even though the companies were implementing their idea in a completely different manner than described in their patent—noting that they had patented their invention before the technology to best implement it was actually available." GAO, *Intellectual Property* 29.

II. THE FEDERAL CIRCUIT'S PERMISSIVE STANDARD DISTORTS PATENTEE BEHAVIOR AT THE PATENT OFFICE

Failing to demand precision in claim drafting reinforces incentives for patent applicants to write vague patents, imposes unrealistic demands on the PTO, and shifts social costs away from the only party who can reduce them (the applicant) and towards the public, which cannot. Such a legal rule meets the very definition of inefficiency. *See* Ronald H. Coase, *The Problem of Social Cost*, 3 J.L. & Econ. 1 (1960); *compare Medtronic, Inc. v. Mirowski Family Ventures, LLC*, 134 S. Ct. 843, 850 (2014) ("patent holder is in a better position than an alleged infringer to know" claim scope).

1. In sharp contrast to the Federal Circuit, the Patent Office recently stated a standard that rejects claims as indefinite under § 112, ¶ 2, if "a person of ordinary skill in the relevant art would read" the claim "with more than one reasonable interpretation." PTO, Manual of Patent Examining Procedure § 2173.02(I) (8th ed. rev. 9, Aug. 2012) ("MPEP"); *see Ex parte Miyazaki*, No. 2007-3300, 2008 WL 5105055, at *10 (B.P.A.I. Nov. 19, 2008) (rejecting claims as indefinite because, when read in light of the specification, they were "amenable to two or more plausible claim constructions"). The PTO instructs its examiners that they are on their own in seeking to police claim ambiguity, because the courts following Federal Circuit precedent "will not find a patented claim indefinite unless it is 'insolubly ambiguous.' In other words, the validity of a claim will be preserved [by the court] if some meaning can be gleaned from the language." MPEP § 2173.02(I) (citations omitted).

But efforts by the PTO alone to improve patent clarity—while critically important—are necessarily insufficient because of institutional limitations on the examination process.[7] The PTO must examine hundreds of thousands of patent applications each year. The time that an examiner can devote to each application is necessarily limited. On average, an examiner spends a total of 18 hours examining a patent—including time spent on reviewing the initial application, searching through prior art, comparing prior art to the proposed claims, and drafting office actions explaining the reasons for accepting or rejecting the proposed claims. Dan L. Burk & Mark A. Lemley, *The Patent Crisis and How the Courts Can Solve It* 23 (2009). Add to this the natural information asymmetry between the examiner—who has ordinary skill in the art but who cannot be as familiar with the invention as the applicant (and who likely is less familiar with the specific problem the invention solves)—and the applicant. In the *ex parte* examination process, there is no adversary to put forward contrary arguments. Worse still, under Federal Circuit law, a patent must issue unless the examiner can build an affirmative case for *denying* the application. *In re Oetiker*, 977 F.2d 1443, 1445 (Fed. Cir. 1992); *see* MPEP § 2173.02(III.A-B) ("Examiner Must Establish a Clear Record" of indefiniteness

---

[7] The PTO's recent efforts and additional improvements that might be adopted in the future (*see* White House, *FACT SHEET – Executive Actions: Answering the President's Call to Strengthen Our Patent System and Foster Innovation* (Feb. 20, 2014), *available at* http://www.whitehouse.gov/the-press-office/2014/02/20/fact-sheet-executive-actions-answering-president-s-call-strengthen-our-p), would at best affect only patents to be issued in the future, not the more than two million patents already issued and in effect.

and "must set forth the specific term or phrase that is indefinite and why the metes and bounds are unclear"). Consequently, the PTO alone cannot realistically be a fully effective or even efficient gatekeeper against vague patents. Article III courts independently must enforce the statute's safeguards against ambiguous patents.

2. Because the PTO's ability to enforce the requirements of § 112, ¶ 2 is constrained, and because the Federal Circuit's standard is so lax, patent applicants are incentivized to write patent claims that make it difficult, rather than easy, for the public to determine a patent's scope. *See* Bessen & Meurer, *Patent Failure* 46-72. Patentees are encouraged, by legal rules and by practitioners' guides, effectively to game the system by drafting patent claims that can be read narrowly during examination—to avoid prior art—and broadly during litigation—to sweep in inventions by others that the patentee never conceived. *Id.* at 57.[8] Under the Federal Circuit's permissive

---

[8] *See* Pet. Br. 31 (citing prosecution training manuals); *see also* Bohannan & Hovenkamp, *Creation without Restraint* 131 ("[T]he drafter naturally tries to be as broad and even ambiguous as the circumstances allow."); Michael Risch, *The Failure of Public Notice in Patent Prosecution*, 21 Harv. J.L. & Tech. 179, 188 (2007) ("Patent applicants have an incentive to allow claims to remain vague so that they can mold the claims to fit the future product of a currently unknown, potential infringer or to avoid invalidation if previously undiscovered prior art comes to light."); R. Polk Wagner, *Understanding Patent-Quality Mechanisms*, 157 U. Pa. L. Rev. 2135, 2149 (2009) ("[A] patentee will almost certainly seek substantial vagueness, thus gaining flexibility to effectively alter the scope and description of the patent according to changing circumstances."); Lee Petherbridge, *On the Development of Patent Law*, 43 Loy. L.A. L. Rev. 893, 902 (2010) ("seek vagueness"); Stephen M. McJohn, *Patents: Hiding From History*, 24 Santa Clara Computer & High Tech. L.J. 961,

approach, fewer than 6% of patent invalidations are based on indefiniteness, John R. Allison & Mark A. Lemley, *Empirical Evidence on the Validity of Litigated Patents*, 26 AIPLA Q.J. 185, 208, tbl. 1 (1998), and fewer and fewer district court decisions are finding challenged claims to be indefinite. Christa J. Laser, *A Definite Claim on Claim Indefiniteness: An Empirical Study of Definiteness Cases of the Past Decade with a Focus on the Federal Circuit and the Insolubly Ambiguous Standard*, 10 Chi.-Kent J. Intell. Prop. 25, 33 (2010). In the experience of *amici*, the Federal Circuit's standard discourages indefiniteness challenges against many vague patents.

3. At least one Federal Circuit judge has forcefully argued that Article III courts should reinforce, not undermine, the PTO's efforts. In a dissent from the denial of panel rehearing in *Enzo Biochem, Inc. v. Applera Corp.*, 605 F.3d 1347 (Fed. Cir. 2010), Federal Circuit Judge Plager noted that the court "now spends a substantial amount of judicial resources trying to make sense of unclear, overbroad, and sometimes incoherent claim terms. It is time for us to move beyond sticking our fingers in the neverending leaks in the dike that supposedly defines and figuratively surrounds a claimed invention. Instead, we might spend some time figuring out how to support the PTO in requiring that the walls surrounding the claimed invention be made of something other than

---

971 (2008) ("[E]xperts in claim drafting offer the following advice to inventors and patent drafters: Do not define the terms used in your claims; do not identify the category of invention in the preamble to the claims; do not identify features of the invention as 'important;' and do not even use the word 'invention' in the written description. Such claim drafting has been described as a trend toward 'intentional obscurity.'") (footnote omitted).

quicksand." *Id.* at 1349. The indefiniteness doctrine "could go considerably further in promoting [the public-notice] objective than it currently does, with the not inconsequential benefit of shifting the focus from litigation over claim construction to clarity in claim drafting." *Id.* Only this Court can ensure that the Federal Circuit's future jurisprudence is in accord.

III. THE PROBLEM OF INDEFINITENESS SHOULD BE ADDRESSED BY ENFORCING THE STATUTE AND THIS COURT'S PRECEDENTS REQUIRING CLAIMS TO BE CLEAR TO A PERSON OF ORDINARY SKILL IN THE ART AT THE TIME THE PATENT ISSUES

Courts should enforce the statute's particular-and-distinct-claiming requirement by invalidating any patent that is not clear to a person of ordinary skill in the art either because the claim has no distinct meaning or because the claim has more than one reasonable interpretation and the patentee has failed to specify which meaning is intended. The Patent Act requires that "[a]n application for patent . . . shall include . . . a specification as prescribed by section 112." 35 U.S.C. § 111(a)(2)(A). Section 112, in turn, requires the applicant to define the patent claims precisely: "The specification shall conclude with one or more claims particularly pointing out and distinctly claiming the subject matter which the applicant regards as his invention." *Id.* § 112, ¶ 2.

This Court has stated that "the very purpose" of a patent claim is to "mak[e] the patentee define *precisely* what his invention is; and it is unjust to the public, as well as an evasion of the law, to construe it in a manner different from the plain import of

its terms." *White v. Dunbar*, 119 U.S. 47, 52 (1886) (emphasis added); *see Merrill*, 94 U.S. at 573-74; *Evans v. Eaton*, 20 U.S. (7 Wheat.) 356, 434 (1822) (a patent must give "warning": "to put the public in possession of what the [patentee] claims as his own invention, so as . . . to guard against prejudice or injury from the use of an invention which the party may otherwise innocently suppose not to be patented," and "at the same time . . . taking from the inventor the means of practising upon the credulity or the fears of other persons, by pretending that his invention is more than what it really is"). "This clarity is essential to promote progress, because it enables efficient investment in innovation. A patent holder should know what he owns, and the public should know what he does not." *Festo Corp. v. Shoketsu Kinzoku Kogyo Kabushiki Co.*, 535 U.S. 722, 730-31 (2002).

The Federal Circuit's approach ignores these requirements. In the decision below, the Federal Circuit held that a court cannot invalidate a claim as indefinite unless the claim is found, notwithstanding heroic efforts devoted to divining a construction, to have no discernible meaning. "[W]e have not insisted that claims be plain on their face in order to avoid a determination of invalidity for indefiniteness. 'If the meaning of the claim is discernible, even though the task may be formidable and the conclusion may be one over which reasonable persons will disagree, we have held the claim sufficiently clear to avoid invalidity on indefiniteness grounds.'" Pet. App. 21a-22a (citations omitted; quoting *Exxon Research & Eng'g Co. v. United States*, 265 F.3d 1371, 1375 (Fed. Cir. 2001)). "A claim is indefinite only when it is 'not amenable to construction' or 'insolubly ambiguous.'" *Id.* at 13a (quoting *Datamize, LLC v. Plumtree Soft-*

ware, Inc., 417 F.3d 1342, 1347 (Fed. Cir. 2005)). Whether a claim term has discernible meaning, the Federal Circuit held, requires the term to be construed by a court in a *Markman* hearing usually following discovery, and too often following an appeal.

The Federal Circuit's standard is fundamentally flawed in three important respects. First, the test is applied too late. Here, it was not until review of the district court's claim construction on appeal that the public knew what the patent covered. Second, the standard fails to require that a patent provide clear notice of what it ultimately covered. This patent is an example where "reasonable persons will disagree" about what the claim covers; indeed, the four judges below construed the claim three different ways. Third, the court's test permits a claim to be definite when a court can discern nothing more than the *function* the invention is supposed to perform even when the patent is agnostic about *how* to perform it—thereby preempting all future solutions to the same problem, including solutions never conceived much less described by the applicant.

A. Clarity Is Required When the Patent Issues

Notice of what a patent covers is needed at the time the patent issues to be "fair . . . to the public." *Merrill*, 94 U.S. at 573. That the statute requires such precision in the patent *application* underscores the importance of requiring precision at the outset. Under the Federal Circuit's standard, the published claim need not provide such notice; instead, it may be sufficient even if the scope of the patent's claims is revealed only after full construction of the claim (here, after *appellate* claim construction)—meaning that the public is threatened with the expense and

delay of litigation despite the fact that a claim is indefinite on its face.

Professors Bohannan and Hovenkamp describe the "[p]erverse[]" result that "claims for which no timely notice was given" to the public are worth more to the patentee—and impose greater social costs—than claims that are disclosed in a timely fashion:

> Looking prospectively, a potential licensee with notice of a patent will be willing to pay the incremental value of an invention in light of competitive alternatives. If a firm invests first and is later caught by surprise, however, then the patentee may be in a position to appropriate the entire value of the investment. This is why land developers always insist on clear title before they develop. At that time they can make investment decisions in a competitive land market. If they are found to be trespassers only after they have built a costly building, however, then the land owner will be in a position to extract a much greater sum, up to the cost of relocating.

Bohannan & Hovenkamp, *Creation without Restraint* 73-74.

This case typifies the problem. The patent-in-suit issued in 1994. The patentee sued the petitioner in 2004 and again in 2010. In 2012, the district court held the patent claim was indefinite. Finally, in 2013, after the patent expired, the Federal Circuit struggled to find a "discernible meaning" and in two separate opinions provided two different interpretations of the claim. During the entire life of this patent, the public was deprived of the "*quid pro quo*" for the patent right—the "precision of disclosure [that was] essential to warn the industry concerned of the precise scope of the monopoly asserted." *Universal*

Oil Prods. Co. v. Globe Oil & Ref. Co., 322 U.S. 471, 484 (1944); *cf. FCC v. Fox Television Stations, Inc.*, 132 S. Ct. 2307, 2317 (2012) ("A fundamental principle in our legal system is that laws which regulate persons or entities must give fair notice of conduct that is forbidden or required.").

B. The Claim Must Be Distinct, Not Unclear or Ambiguous, to a Person of Ordinary Skill in the Art

A claim is indefinite if it is not "plain on [its] face" and instead is susceptible to different meanings "over which reasonable persons will disagree." Pet. App. 21a, 22a. That conclusion follows from the text of the statute, this Court's longstanding interpretations of the statute, and the importance of clear boundaries in promoting innovation. To be "distinctly claim[ed]" the patent cannot have multiple different meanings. Throughout the relevant period, "distinct" has meant "separate; specifically marked off; discretely different from another or others, or from one another," 2 *Century Dictionary* 1693 (1897), or "1. Different; not the same. 2. Separate; not conjunct. 3. Clear; unconfused," Samuel Johnson, *Dictionary of the English Language* (3d ed. 1768). This Court likewise has understood particular and distinct claiming to require that "the patentee define precisely what his invention is" and that the claim terms have "plain import." *White*, 119 U.S. at 52.

The Federal Circuit's substantive standard for indefiniteness explicitly conflicts with this requirement. Pet. App. 21a ("we have not insisted that claims be plain on their face"), 22a (claim may have different meanings "over which reasonable persons will disagree"). Here, the critical claim term was construed three different ways by four judges because

the language of the claims, when read in the light of the specification, failed to define a critical term of the claimed invention.[9] But the purpose of a patent is to explain to those with ordinary skill in the art precisely—that is, "particularly" and "distinctly"—what the inventor regards as his or her invention. The Federal Circuit's approach to a critical patent doctrine departs from the express words of the Patent Act and this Court's precedents, requiring correction.[10]

C. A "Functional" Construction Cannot Resolve Indefiniteness

The Court should reject the Federal Circuit majority's analysis of *why* the claims at issue in this case satisfy the definiteness requirement as contrary to this Court's precedents on functional claim limitations.

---

[9] Where a claim term may be susceptible to multiple meanings in the art, the specification should indicate the meaning intended by the patentee. Likewise, where a term is not recognized, or does not have a widely known and accepted meaning, in the art, the specification should provide a definition or meaning.

[10] There is no unfairness in invalidating a patent for indefiniteness; it is the responsibility of the patent applicant to ensure that the claims are clear. Moreover, invalidation of indefinite patents creates the right *ex ante* incentives for applicants to claim precisely what they have invented, rather than to seek broader claims in an effort to foreclose independent innovation. In real property, "[d]eed descriptions can be litigated, . . . and the general rule is that a deed description that does not describe the conveyed land with sufficient accuracy that a reasonably knowledgeable person can identify its boundaries fails to pass any title whatsoever. This approach creates a very powerful default rule: the drafter of the deed must get it right the first time. The price of not getting it right is that the deed fails." Bohannan & Hovenkamp, *Creation without Restraint* 73-74 (footnote omitted).

1. This Court long ago held that the statutory definiteness requirement for claims—now in § 112, ¶ 2, but in the similarly worded pre-1952 patent statute as well—prohibited claim language that was purely functional at the point of novelty over prior art. *Halliburton*, 329 U.S. at 8-10 (relying on, *e.g.*, *General Elec. Co. v. Wabash Appliance Corp.*, 304 U.S. 364, 371 (1938), and *Holland Furniture Co. v. Perkins Glue Co.*, 277 U.S. 245, 256-57 (1928)). In *Halliburton*, the Court invalidated a claim that identified the very point of novelty "in terms of what it will do rather than in terms of its own physical characteristics or its arrangement in the new combination apparatus." *Id.* at 9.

This Court condemned "the broadness, ambiguity, and overhanging threat of the functional claim," which, at the very point of inventive contribution, covered any device that performed the novel function. *Id.* at 12. "Just how many different devices there are of various kinds and characters which would serve to" perform that function "we do not know," the Court explained, and, "unless frightened from the course of experimentation by broad functional claims like these, inventive genius may evolve many more devices to accomplish the same purpose." *Id.*

2. The Court's decision in *Halliburton*, although it remains good law, not having been overturned or questioned by the Court nor altered by Congress, has (with but rare exceptions[11]) *not* been followed by the lower courts ever since the decision by the Federal

---

[11] *But cf. Ibormeith IP, LLC v. Mercedes-Benz USA, LLC*, 732 F.3d 1376, 1379, 1382 (Fed. Cir. 2013) (Taranto, J.) (functionally defined claim held indefinite because it was not limited to a particular solution; merely providing figures that "a person of ordinary skill in the art *could* use to design his or her own method" of achieving function insufficient).

Circuit's predecessor, the Court of Customs and Patent Appeals, in *In re Swinehart*, 439 F.2d 210 (C.C.P.A. 1971). In *Swinehart*, the Patent Office had rejected a patent as indefinite "'for failing to particularly point out and distinctly claim the invention as required in 35 U.S.C. 112'" because the claim defined the invention by the *results* it achieves as opposed to what it *is*. *Id.* at 211-12 (quoting PTO decision). The CCPA overturned the rejection, holding that purely functional claiming was a permitted convenience or even "practical necessity":

> We take the characterization "functional", as used by the Patent Office and argued by the parties, to indicate nothing more than the fact that an attempt is being made to define something (in this case, a composition) by what it *does* rather than by what it *is* (as evidenced by specific structure or material, for example). In our view, there is nothing intrinsically wrong with the use of such a technique in drafting patent claims. Indeed we have even recognized in the past the practical necessity for the use of functional language.

Id. at 212 (footnote omitted; emphases added). To eliminate any doubt, the CCPA further overruled in a footnote its own earlier decision in *In re Fisher*, 307 F.2d 948 (C.C.P.A. 1962). *See* 439 F.2d at 212 & n.4. *Swinehart* did not cite this Court's decision in *Halliburton* and gave only a glancing "cf." nod to this Court's earlier decision in *General Electric*, limiting that precedent to claims whose "potential scope of protection [goes] beyond that which is justified by the specification disclosure." *Id.* at 213. By contrast, the decision that *Swinehart* overruled, *Fisher*, had applied this Court's decision in *General Electric* in rejecting the "'vice'" of "'us[ing] conveniently func-

tional language at the exact point of novelty.'" 307 F.2d at 952-53 (quoting 304 U.S. at 371).

3. The claim construction the Federal Circuit majority adopted produces the very type of functional claim that this Court condemned in *Halliburton*. The construction depended on describing a problem or a result, as opposed to describing a particular way to achieve the result. The "spaced relationship" of the claim was defined by the majority to mean whatever spacing works to remove the electrical signal from the muscles that is interfering with the desired electrical signal from the heart. Pet. App. 20a. In other words, the court held the claim definite because it could discern the function that the claimed "spaced relationship" was intended to perform—even though the patent was agnostic about how to perform it. In the absence of a definite solution to the "which way" problem, the patent should never have issued.

Inventions are not wish lists. Nor are they recitations of desired results that, if achieved, would be useful, even commercially valuable. Inventions are particular *ways* of achieving results. And patents are intended to incentivize, by protecting, investments in new and useful *ways* of achieving results, leaving to future innovators the motive and the freedom to invent different, and often better, ways to achieve the same results. Claims that recite only a desired result, but fail to describe particular ways to achieve those results, are indefinite under *Halliburton*. The Federal Circuit's attempt to avoid insoluble ambiguity by giving an ambiguous term a purely functional interpretation is accordingly also contrary to *Halliburton*. That error should be corrected to ensure that purely functional claim limitations do not undermine the important notice requirements of the Patent Act.

IV. THE PRESUMPTION OF VALIDITY DOES NOT APPLY TO QUESTIONS OF LAW OR OTHERWISE JUSTIFY EXTRAORDINARY EFFORTS TO SALVAGE INDEFINITE CLAIMS

The Federal Circuit defends its current rule in part based on the presumption that patents are valid. Pet. App. 22a. "By embracing this standard, 'we accord respect to the statutory presumption of patent validity, and we protect the inventive contribution of patentees, even when the drafting of their patents has been less than ideal.'" *Id.* (quoting *Exxon*, 265 F.3d at 1375).[12]

But this Court's decisions make clear that a patent must first be definite—"fair upon its face"—to enjoy a presumption of validity. *Radio Corp. of Am. v. Radio Eng'g Labs., Inc.*, 293 U.S. 1, 8 (1934) (applying common-law presumption of validity prior to 1952 amendment of the Patent Act). In one of this Court's earliest patent cases, the Court specifically rejected the argument that the patentee be given "the benefit of a liberal construction in support of the patent" in order to "uphold" the action of the Patent Office. *Merrill*, 94 U.S. at 572-73; *see id.* (rather than strain to give "full effect to all that is found in the application on which the Patent Office acted, [and] uphold that which was really invented, and which comes within any fair interpretation of the patentee's assertion of claim," holding claim invalid because the

---

[12] The Federal Circuit has further strived to avoid invalidating ambiguous patents by requiring indefiniteness to be shown by "clear and convincing evidence." *E.g., Halliburton Energy Servs., Inc. v. M-I LLC*, 514 F.3d 1244, 1249-50 (Fed. Cir. 2008); *but see Ibormeith IP*, 732 F.3d at 1379 ("adequate disclosure is a question of law that we decide *de novo*").

patentee had failed to give "the world . . . fair notice of what he claims, of what his patent covers"). This Court's decisions are instead emphatic that "[t]he [patent] monopoly is a property right; and like any property right, its boundaries should be clear." *Festo*, 535 U.S. at 730-32; *see Markman v. Westview Instruments, Inc.*, 517 U.S. 370, 373 (1996) ("[i]t has long been understood that a patent must describe the exact scope of an invention"); *United Carbon Co. v. Binney & Smith Co.*, 317 U.S. 228, 236 (1942) ("The statutory requirement of particularity and distinctness in claims is met only when they clearly distinguish what is claimed from what went before in the art and clearly circumscribe what is foreclosed from future enterprise.").

Justice Breyer, writing for three Justices in *Microsoft Corp. v. i4i Ltd. Partnership*, 131 S. Ct. 2238 (2011), noted that heightened burdens for invalidating patents apply only to questions of fact, not to questions of law. "Where the ultimate question of patent validity turns on the correct answer to legal questions"—including whether the patent applicant described the claims as required under § 112—"today's strict standard of proof has no application." *Id.* at 2253 (Breyer, J., concurring). Because indefiniteness under § 112, ¶ 2 is a question of law (*e.g.*, *Ibormeith IP*, 732 F.3d at 1379 ("adequate disclosure is a question of law that we decide *de novo*")), and not a question of fact, the presumption of validity is simply inapplicable here. *Cf. Lighting Ballast Control LLC v. Philips Elecs. N. Am. Corp.*, No. 2012-1014, 2014 WL 667499, at *4 (Fed. Cir. Feb. 21, 2014) (determining the meaning and scope of patent claims is a question of law to be reviewed by the appellate courts *de novo*: "'in the actual interpretation of the

patent the court proceeds upon its own responsibility, as an arbiter of the law, giving to the patent its true and final character and force'") (quoting *Markman*, 517 U.S. at 388) (emphasis omitted).

Even were there additional force in this context to the presumption of validity, the particular errors in the Federal Circuit's decision below—holding that claim scope need not be particular and distinct when the patent issues; that a claim is definite even when it is subject to multiple reasonable interpretations; and that a claim can be made definite by defining it solely in terms of a to-be-achieved function—are legal errors that infect the review of every patent by every court. This Court should correct them.

CONCLUSION

The Court should reverse the decision below.

Respectfully submitted.

JEFFREY H. DEAN
ASSOCIATE GENERAL
COUNSEL, LITIGATION
& REGULATORY
AMAZON.COM, INC.
440 Terry Avenue North
Seattle, WA 98109-5210
(206) 740-0521

SUZANNE MICHEL
SENIOR PATENT COUNSEL
GOOGLE INC.
1101 New York Avenue, N.W.
Washington, D.C. 20005
(202) 346-1373

JOHN THORNE
Counsel of Record
AARON M. PANNER
JUDD E. STONE
KELLOGG, HUBER, HANSEN,
TODD, EVANS & FIGEL,
P.L.L.C.
1615 M Street, N.W.
Suite 400
Washington, D.C. 20036
(202) 326-7900
(jthorne@khhte.com)

DAN LANG
CHRISTA ZADO
CISCO SYSTEMS, INC.
170 W. Tasman Drive
San Jose, CA 95134
(408) 525-2337

LAURA COLEMAN
ANTHONY PETERMAN
MARC VOCKELL
MICHELE CONNORS
DELL INC.
One Dell Way
Round Rock, TX 78682
(512) 723-4208

ZION MAFFEO
ESRI
380 New York Street
Redlands, CA 92373
(909) 793-2853

ANDREW R. ETKIND
VICE PRESIDENT AND
GENERAL COUNSEL
GARMIN INTERNATIONAL, INC.
1200 E. 151st Street
Olathe, KS 66062
(913) 397-8200

DIANE K. LETTELLEIR
SENIOR MANAGING COUNSEL
LITIGATION
J.C. PENNEY CORPORATION,
INC.
6501 Legacy Drive, MS 1122
Plano, TX 75024
(972) 431-5012

DION MESSER
SR. IP CORPORATE COUNSEL
LIMELIGHT NETWORKS, INC.
222 South Mill Avenue
8th Floor
Tempe, AZ 85281
(602) 850-4833

ISAAC PETERSON
PATENT LITIGATION COUNSEL
NETFLIX, INC.
100 Winchester Circle
Los Gatos, CA 95032
(408) 540-3700

LEE C. CHENG
CHIEF LEGAL OFFICER
NEWEGG INC.
16839 E. Gale Avenue
City of Industry, CA 91745
(626) 271-9700

ROBERT H. TILLER
DAVID B. PERRY
RED HAT, INC.
100 East Davie Street
Raleigh, NC 27601
(919) 754-4232

SAMIR N. PANDYA
SENIOR IP COUNSEL
SAP – GLOBAL LITIGATION
GROUP
3999 West Chester Pike
Newtown Square, PA 19073
(610) 661-9767

TIMOTHY K. WILSON
SENIOR IP COUNSEL
SAS INSTITUTE INC.
701 SAS Campus Drive
Cary, NC 27513
(919) 531-3240

GAIL LEVINE
KEVIN PARTON
VERIZON COMMUNICATIONS INC.
1300 I Street, N.W.
Washington, D.C. 20005
(202) 515-2552

March 3, 2014

AMICUS CURIAE BRIEF

RECORD
AND
BRIEFS

Supreme Court, U.S.
FILED
MAR - 3 2014
OFFICE OF THE CLERK

No. 13-369

In the Supreme Court of the United States

NAUTILUS, INC., PETITIONER

v.

BIOSIG INSTRUMENTS, INC.

ON WRIT OF CERTIORARI
TO THE UNITED STATES COURT OF APPEALS
FOR THE FEDERAL CIRCUIT

BRIEF OF THE AMERICAN BAR ASSOCIATION *AS AMICUS CURIAE* IN SUPPORT OF NEITHER PARTY

Of Counsel:
JOHN P. ELWOOD
WILLIAM L. LAFUZE
STEPHEN C. STOUT
AJEET P. PAI

JAMES R. SILKENAT
Counsel of Record
PRESIDENT,
AMERICAN BAR
ASSOCIATION
321 N. Clark Street
Chicago, IL 60654
(312) 988-5000
abapresident@
americanbar.org

Counsel for Amicus Curiae

Library of Congress
Law Library

QUESTION PRESENTED

Amicus curiae the American Bar Association will address the following question:

Does the Federal Circuit's acceptance of ambiguous patent claims with multiple reasonable interpretations—so long as the ambiguity is not "insoluble" by a court—defeat the statutory requirement of particular and distinct patent claiming?

TABLE OF CONTENTS

QUESTION PRESENTED I

APPENDIX CONTENTS III

TABLE OF AUTHORITIES IV

INTEREST OF THE *AMICUS CURIAE* 1

SUMMARY OF ARGUMENT 3

ARGUMENT 6

I. Adopting Petitioner's Stringent Test For The Statutory Requirement Of Definiteness Does Not Address The Concerns Motivating Current Patent Reform Efforts 6

II. This Court Has Long Required That The Definiteness Requirement Strike A Proper Balance Between Notice And Practical Necessity 9

A. This Court Has Recognized That Practical Necessity Demands Only Reasonable Certainty In The Application Of The Statutory Requirement For Definiteness 10

B. The Federal Circuit's Standard For Determining Definiteness Properly Looks To Whether A Person Of Ordinary Skill In The Relevant Art Would Understand What Is Claimed 15

III. The Practical Effects Of Adopting Petitioner's Proposed Test Are Undesirable And Undermine The Purpose Of 35 U.S.C. § 112, Second Paragraph 19

CONCLUSION 21

APPENDIX CONTENTS

Appendix A—American Bar Association Resolution 117 ..... 1a

TABLE OF AUTHORITIES

Cases **Page(s)**

Abbott Labs. v. *Baxter Pharm. Prods., Inc.*, 471 F.3d 1363 (Fed. Cir. 2006) 20

Bard Peripheral Vascular, Inc. v. *W.L. Gore & Assocs., Inc.*, 682 F.3d 1003 (Fed. Cir. 2012) 20

Beachcombers Int'l, Inc. v. *WildeWood Creative Prods., Inc.*, 31 F.3d 1154 (Fed. Cir. 1994) 19

Carnegie Steel Co. v. *Cambria Iron Co.*, 185 U.S. 403 (1902) 11, 18

Datamize LLC v. *Plumtree Software, Inc.*, 417 F.3d 1342 (Fed. Cir. 2005) 16

eBay Inc. v. *MercExchange, L.L.C.*, 547 U.S. 388 (2006) 6

Eibel Process Co. v. *Minn. & Ontario Paper Co.*, 261 U.S. 45 (1923) 11, 12, 17, 18

Energizer Holdings, Inc. v. *Int'l Trade Comm'n*, 435 F.3d 1366 (Fed. Cir. 2006) 17

Exxon Research & Eng'g Co. v. *United States*, 265 F.3d 1371 (Fed. Cir. 2001) 15

Festo Corp. v. *Shoketsu Kinzoku Kogyo Kabushiki Co.*, 535 U.S. 722 (2002) 9, 14, 15, 19

Function Media, L.L.C. v. *Google, Inc.*, 708 F.3d 1310 (Fed. Cir. 2013) 17

Gen. Elec. Co. v. *Wabash Appliance Corp.*, 304 U.S. 364 (1938) 13

Halliburton Energy Servs., Inc. v. *M-I LLC*,
514 F.3d 1244 (Fed. Cir. 2008) 16

Honeywell Int'l, Inc. v. *Int'l Trade Comm'n*,
341 F.3d 1332 (Fed. Cir. 2003) 16

Machinery Corp. of Am. v. *Gullfiber AB*,
774 F.2d 467 (Fed. Cir. 1985) 21

Markman v. *Westview Instruments, Inc.*,
517 U.S. 370 (1996) 11, 18

Minerals Separation, Ltd. v. *Hyde*,
242 U.S. 261 (1916) 12, 13

Novo Indus., L.P. v. *Micro Molds Corp.*,
350 F.3d 1348 (Fed. Cir. 2003) 16

Phillips v. *AWH Corp.*,
415 F.3d 1303 (Fed. Cir. 2005) 18

United Carbon Co. v. *Binney & Smith Co.*,
317 U.S. 228 (1942) 11, 18

Vitronics Corp. v. *Conceptronic, Inc.*,
90 F.3d 1576 (Fed. Cir. 1996) 19

Vivid Techs., Inc. v. *Am. Sci. & Eng'g, Inc.*,
200 F.3d 795 (Fed. Cir. 1999) 20

Warner-Jenkinson Co. v. *Hilton Davis Chem. Co.*,
520 U.S. 17 (1997) 14

Constitution, Statutes and Rules

35 U.S.C. § 112 ..... *passim*

35 U.S.C. § 285 8

Fed. R. Civ. P. 11 8

H.R. 845, 113th Cong (2013). 8

H.R. 2024, 113th Cong (2013). 8

H.R. 2639, 113th Cong (2013). 8

H.R. 2766, 113th Cong (2013). 8

H.R. 3540, 113th Cong (2013). 8

Innovation Act, H.R. 3309, 113th Cong. (2013) 8

Leahy-Smith America Invents Act, Pub. L. No. 112-29, 125 Stat. 284 (2011) 10

Patent Act of July 4, 1836, ch. 357, 5 Stat. 119, § 6 (1836) 11

Patent Act of July 8, 1870, ch. 230, 16 Stat. 201, § 26 (1870) 10

S. 866, 113th Cong (2013). 8

S. 1013, 113th Cong (2013). 8

S. 1612, 113th Cong (2013). 8

S. 1720, 113th Cong (2013). 8

U.S. Const. art. 1, § 8, cl. 8 6

Miscellaneous

ABA *amicus* brief information, *available at* http://www.americanbar.org/amicus 2

ABA General Information, *available at* http://www.americanbar.org/groups/leadership/delegates.html 2

Fact Sheet: White House Task Force on High-Tech Patent Issues, Office of the Press Secretary (June 4, 2013), *available at* http://www.whitehouse.gov/the-press-office/2013/06/04/fact-sheet-white-house-task-force-high-tech-patent-issues 7

Randall R. Rader, *et al.*, Op-Ed., *Make Patent Trolls Pay in Court*, N.Y. TIMES, June 4, 2013 8

INTEREST OF THE *AMICUS CURIAE*[1]

The American Bar Association ("ABA") respectfully submits this brief in support of neither party. The ABA urges that, consistent with this Court's current jurisprudence, the definiteness requirement of 35 U.S.C. § 112, second paragraph, requires striking a balance between public notice and the practical realities of claim drafting, and that any benefits that may be derived from adopting petitioner's unreasonably rigid definiteness standard will be far outweighed by the resulting negative effects on both patent prosecution practice and claim construction practice before the district courts.

The ABA is the largest voluntary professional membership organization and the leading organization of legal professionals in the United States. Its nearly 400,000 members come from all fifty states and other jurisdictions, and include attorneys in private law firms, corporations, non-profit organizations, government agencies, and prosecutor and public defender offices. They also include judges,

---

[1] No counsel for a party authored this brief in whole or part, and no counsel or party made a monetary contribution to fund the preparation or submission of this brief. No person other than the *amicus curiae*, its members, and its counsel made any monetary contribution to this brief's preparation and submission. The parties have consented to this filing.

legislators, law professors, law students, and nonlawyer "associates" in related fields.[2]

The ABA's Section of Intellectual Property Law ("IPL Section") is the world's largest organization of intellectual property professionals. Its approximately 24,000 members represent patent owners, accused infringers, individual inventors, large and small corporations, research institutions, and public and private colleges and universities across a wide range of technologies and industries. Formed in 1894, the IPL Section works to promote the development and improvement of intellectual property law and takes an active role in the consideration of proposed legislation, administrative rule changes and international efforts. The Section also presents resolutions to the ABA House of Delegates for adoption as ABA policy.[3] These policies then provide a basis for the preparation of ABA *amicus curiae* briefs,

---

[2] Neither this brief nor the decision to file it should be interpreted to reflect the view of any judicial member of the ABA. No member of the Judicial Division Council participated in the adoption or endorsement of the positions in this brief, nor was it circulated to any member of the Judicial Division Council before filing.

[3] Only recommendations adopted by vote of the ABA's House of Delegates, but not the accompanying reports, become ABA policy. The House of Delegates is composed of 560 delegates representing states and territories, state and local bar associations, affiliated organizations, sections and divisions, ABA members and, among others, the Attorney General of the United States. See ABA House of Delegates General Information, *available at* http://www.americanbar.org/groups/leadership/delegates.html, and ABA *amicus* brief information, *available at* http://www.americanbar.org/amicus.

which are filed primarily in this Court and the Court of Appeals for the Federal Circuit.

Through a collaborative process, the diverse membership of the IPL Section developed consensus positions on the meaning of the definiteness requirement under § 112, second paragraph. The IPL Section has concluded that the present balancing approach best protects public notice while recognizing that, as a practical matter, practitioners and inventors cannot in all cases reduce inventions to writing with such clarity that no dispute will ever arise. Its recommendations embodying this conclusion were adopted as policy by the ABA's House of Delegates as ABA Resolution 117 (policy adopted August 2011) and, with their accompanying report, are set out in full in the Appendix.

The ABA takes no position as to which party should prevail in this case. The ABA, instead, submits this brief to assist the Court in considering the principles that should govern all patents under the law of definiteness.

SUMMARY OF ARGUMENT

The ABA submits that current law strikes the appropriate balance between the notice function of patent claims and the need to accommodate practical difficulties inherent in drafting patent claims. Under that established jurisprudence, the determination of whether issued patent claims are sufficiently definite under 35 U.S.C. § 112, second paragraph, looks not to

whether claim language is subject to more than one reasonable interpretation, but instead whether a person of ordinary skill would understand what is claimed. Adopting the unreasonably stringent test for definiteness for issued patents that petitioner advocates would adversely change this Court's definiteness jurisprudence for all patents and patent owners.

The statutory definiteness requirement addresses the need for public notice of the scope of patent claims. But as this Court's decisions have long recognized, that need must be tempered to provide adequate protection of inventions and appropriate incentives for innovation. Accordingly, this Court has held that a claim is sufficiently definite so long as a person of ordinary skill in the art would understand the boundaries of what is claimed. This well-established principle of claim construction should be preserved.

The Court of Appeals for the Federal Circuit, in applying these principles, has used different formulations, including the phrase "insolubly ambiguous." But rather than articulating a separate test for definiteness, the factual settings in which that formulation is used demonstrate that it is simply a shorthand for the well-established principle that claims are indefinite when a person of ordinary skill cannot discern the scope of the claims in light of the specification and prosecution history.

Petitioner seeks to elevate notice above all other considerations, urging that claim language be deemed indefinite if it is amenable to multiple reasonable interpretations. But few claims will be so clear that *no* uncertainty can be found in their interpretation. Under this Court's jurisprudence, the proper question should be whether the patent claims are sufficiently definite and descriptive to permit a court to resolve any concrete disputes between the parties by applying the traditional tools of claim construction—a task that courts are well-equipped to undertake using existing law.

Finally, adoption of petitioner's stringent definiteness requirement would adversely affect both patent litigation before the district courts and patent prosecution before the U.S. Patent & Trademark Office. Litigants would have an incentive to advance multiple "reasonable" interpretations of any claim term, forcing patent practitioners and inventors to draft a multiplicity of claims to try to capture every possible variation of an invention and to guard against later possible assertions of indefiniteness.

Accordingly, the ABA urges the Court to reaffirm that, in determining whether an issued patent claim satisfies the definiteness requirement of Section 112, second paragraph, the appropriate test remains whether a person of ordinary skill in the art would understand the bounds of the claim in light of the specification and prosecution history.

ARGUMENT

I. Adopting Petitioner's Stringent Test For The Statutory Requirement Of Definiteness Does Not Address The Concerns Motivating Current Patent Reform Efforts

Petitioner's invitation to significantly tighten the application of the statutory definiteness requirement comes to the Court amid a groundswell of patent reform efforts from all branches of the government. Most of these efforts, however, have not sought to adjust the balance struck by patent law's substantive requirements for patentability. Instead, they have been in response to concerns over the litigation activities of some firms that own patents, but do not practice them.[4] That is, the reform efforts have sought to target those activities while preserving the patent system's overarching purpose "to promote the Progress of Science and useful Arts." U.S. Const. art. 1, § 8, cl. 8. The Court should decline to adjust the patent system's statutory definiteness requirement

---

[4] Firms that own patents, but do not practice them (*i.e.*, do not make, use or sell products or methods claimed by those patents) are commonly referred to as non-practicing entities ("NPEs"). Some NPEs use patents only to seek licensing revenue or settlements and judgments from patent infringement litigation. See *eBay Inc.* v. *MercExchange, L.L.C.*, 547 U.S. 388, 396 (2006) (Kennedy, J., concurring). A type of NPE that is perceived as employing unduly aggressive litigation tactics (such as bringing suit in the name of a shell company or suing hundreds of defendants simultaneously) is sometimes called a "patent assertion entity," or, pejoratively, a "patent troll."

here in a manner that would negatively affect all patents held by all patent owners.

The majority of recent reform efforts have sought to remedy concerns over the perceived disparities in the burdens and costs borne by plaintiffs and defendants in patent infringement lawsuits, particularly in view of the rise, in recent years, of lawsuits initiated by patent assertion entities. These concerns are echoed by petitioner and its *amici*. But to address those concerns, the current reform proposals focus on procedural changes to the litigation process, including fee-shifting, rather than wholesale substantive changes to the requirements for patentability.

For example, in June 2013, the President issued a set of legislative recommendations and executive orders for patent reform. See Fact Sheet: White House Task Force on High-Tech Patent Issues, Office of the Press Secretary (June 4, 2013), *available at* http://www.whitehouse.gov/the-press-office/2013/06/04/fact-sheet-white-house-task-force-high-tech-patent-issues. The President called for patent policies aimed at protecting innovators from frivolous litigation and ensuring high-quality patents, and his proposals included allowing courts greater discretion to award attorney's fees and protecting customers and other end-users from patent infringement liability.

On the same day, the Chief Judge of the United States Court of Appeals for the Federal Circuit co-authored an editorial similarly aimed at patent

assertion entities. Randall R. Rader, *et al.*, Op-Ed., *Make Patent Trolls Pay in Court*, N.Y. TIMES, June 4, 2013. The Chief Judge urged district courts to more vigorously exercise their authority under both the patent statute's existing fee-shifting provision 35 U.S.C. § 285, as well as Rule 11 of the Federal Rules of Civil Procedure, to discourage aggressive litigation and frivolous demands brought by some patent assertion entities. *Id.*

Congress too is at work on patent reform, with a number of bills that would implement some of the President's proposals for curbing perceived abusive litigation practices by some patent assertion entities.[5] Indeed, the House of Representatives has already passed one such bill, H.R. 3309, which includes provisions aimed at (1) heightening pleading requirements for claims of patent infringement, (2) making the award of fees and expenses to the prevailing party presumptive in patent-related cases, and (3) deferring discovery in patent-related cases until after the district court has construed the claims of the patents-in-suit. Innovation Act, H.R. 3309, 113th Cong. (as passed by the House of Representatives on Dec. 5, 2013). Also, in December 2013, the Senate conducted hearings on S. 1720, largely a counterpart to H.R. 3309, and that bill remains under consideration.

---

[5] See, *e.g.*, H.R. 845, 113th Cong. (2013); H.R. 2024, 113th Cong. (2013); H.R. 2639, 113th Cong. (2013); H.R. 2766, 113th Cong. (2013); H.R. 3540, 113th Cong. (2013); S. 866, 113th Cong. (2013); S. 1013, 113th Cong. (2013); S. 1612, 113th Cong. (2013); S. 1720, 113th Cong. (2013).

A revision to the substantive requirements for definiteness, the ABA submits, would not address the litigation-related concerns motivating the reform efforts. Petitioner's request would affect all patents, not merely those asserted in overly aggressive litigation by particular types of patent assertion entities. As set out below, this Court's current jurisprudence strikes the right balance between the notice function of claims and the practical necessities involved in claim drafting; a more stringent definiteness requirement for issued patents would threaten that balance.

II. This Court Has Long Required That The Definiteness Requirement Strike A Proper Balance Between Notice And Practical Necessity

A well-functioning patent system demands claims that provide clear notice to the public.[6] But it must also secure to inventors, "who rely on the promise of the law to bring the invention forth," the fruits of their labors. *Festo Corp.* v. *Shoketsu Kinzoku Kogyo Kabushiki Co.*, 535 U.S. 722, 731 (2002). Like other doctrines that seek to maintain what this Court has termed "the delicate balance" between these competing interests, *id.*, any test for determining whether a patent claim satisfies Section 112's definiteness standard must adequately account for the imprecisions inherent in reducing an invention to the form of words.

---

[6] As discussed below, the "public" in this context refers to persons of skill in the pertinent art, rather than to laypersons.

In contrast to the inflexible standard advocated by petitioner and its *amici*, which seeks to elevate notice above all other considerations, this Court and the Federal Circuit have long applied a more balanced approach that asks whether one of ordinary skill in the art—that person to whom the patent disclosure is directed—would understand what is claimed. This well-established approach is necessary for a robust patent system that protects innovation.

A. This Court Has Recognized That Practical Necessity Demands Only Reasonable Certainty In The Application Of The Statutory Requirement For Definiteness

1. Under 35 U.S.C. § 112, a patent specification "shall conclude with one or more claims particularly pointing out and distinctly claiming the subject matter which the applicant regards as his invention."[7] This statutory requirement, known as "definiteness," dates at least to the 1870 Patent Act, which obliged an applicant to "particularly point out and distinctly claim the part, improvement, or combination which he claims as his invention or discovery." Act of July 8, 1870, ch. 230, § 26, 16 Stat. 198, 201 (1870); see

---

[7] The Leahy-Smith America Invents Act, Pub. L. No. 112-29, 125 Stat. 284 (2011), reformatted the second paragraph of 35 U.S.C. § 112 as § 112(b) in a manner that is not material to the issues before the Court. The revised provision requires that a patent application "shall conclude with one or more claims particularly pointing out and distinctly claiming the subject matter which the inventor or a joint inventor regards as the invention." *Id.*

Markman v. *Westview Instruments, Inc.*, 517 U.S. 370, 379 (1996); see also Act of July 4, 1836, ch. 357, § 6, 5 Stat. 117, 119 (1836) (requiring applicant to "particularly specify and point out the part, improvement, or combination, which he claims as his own invention or discovery").

This Court has explained that a principle purpose underlying the definiteness requirement is to provide notice of what is claimed, to prevent "[a] zone of uncertainty which enterprise and experimentation may enter only at the risk of infringement claims." *United Carbon Co.* v. *Binney & Smith Co.*, 317 U.S. 228, 236 (1942). However, the public notice provided by a patent specification is directed not to a layperson, but to one of skill in the art, and it is by that measure that definiteness must be determined. As the Court explained in an early case relating to a steel process patent:

> The specification of the patent is not addressed to lawyers, or even to the public generally, but to the manufacturers of steel; and any description which is sufficient to apprise them in the language of the art of the definite feature of the invention, and to serve as a warning to others of what the patent claims as a monopoly, is sufficiently definite to sustain the patent.

Carnegie Steel Co. v. *Cambria Iron Co.*, 185 U.S. 403, 437 (1902); accord *Eibel Process Co.* v. *Minn. & Ontario Paper Co.*, 261 U.S. 45, 65 (1923) (paper-

making patent and its specification "were manifested to readers who were skilled in the art of paper making").

2. For over a century, this Court's cases have recognized that the notice function of a patent claim must be tempered by the practical realities of claim drafting. In *Eibel Process*, for example, the Court considered an indefiniteness challenge to a patent disclosing a machine for making paper more quickly by harnessing the effects of gravity. 261 U.S. at 64-65. The patent described a critical limitation in relative, rather than absolute, terms—specifically, that one end of the paper-making machinery was to be maintained at a "substantial" or "high" elevation or pitch. *Id.* at 65-66. Though it observed that "[i]ndefiniteness is objectionable, because the patent does not disclose to the public how the discovery * * * can be made useful, and how its infringement may be avoided," the Court rejected both the challenge to the patent and the notion of a stringent definiteness requirement: "[i]t was difficult for [the patentee] to be more definite, due to the varying conditions" of paper stock and "the necessary variation in the pitch to be used to accomplish the purpose of his invention." *Id.* at 65. And more importantly, the Court explained, a person of ordinary skill in the art "had no difficulty" understanding what the patentee claimed. *Id.* at 65-66.

Likewise, in *Minerals Separation, Ltd.* v. *Hyde*, a case involving an improved method for ore processing, the Court observed that "the certainty which the law

requires in patents is not greater than is reasonable, having regard to their subject-matter." 242 U.S. 261, 270 (1916); cf. *Gen. Elec. Co.* v. *Wabash Appliance Corp.*, 304 U.S. 364, 372–373 (1938) (rejecting claims for failure of description but noting that "[t]he difficulty of making adequate description may have some bearing on the sufficiency of the description attempted"). The *Minerals Separation* patentee failed to specify the optimum amount of oil to be used for processing particular ores using the method, and instead claimed an indeterminate range (an unspecified "fraction" of one percent of the ore). 242 U.S. at 270–271. Yet the Court explained that the claims were nevertheless sufficiently described because the "range of treatment within the terms of the claims, while leaving something to the skill of persons applying the invention, is clearly sufficiently definite to guide those skilled in the art to its successful application." *Id.* at 271. Indeed, the practical necessities of claim drafting precluded requiring more: "it is obviously impossible to specify in a patent the precise treatment which would be most successful and economical in each case." *Id.* In contrast, the Court invalidated three claims that lacked any range or boundary that would permit a person of ordinary skill to understand what was claimed. *Id.*

3. Similarly, this Court has in other contexts recognized that the notice function of claim language must be tempered by the need to avoid depriving inventors of the benefit of the patent bargain. Most notably, the Court has repeatedly declined to "speak

the death" of the doctrine of equivalents, which, like the Court's current approach to definiteness, permits some uncertainty in the scope of claim language. See *Warner-Jenkinson Co.* v. *Hilton Davis Chem. Co.*, 520 U.S. 17, 21 (1997). Under that doctrine, which prevents infringers from evading a patent by making unsubstantial changes, a product "that does not literally infringe upon the express terms of a patent claim may nonetheless be found to infringe" if the product's elements are "equivalent[]" to those of the claim. *Id.*

By permitting liability beyond the literal terms of the patent claim, the doctrine of equivalents unquestionably "renders the scope of patents less certain." *Festo,* 535 U.S. at 732. And it has engendered concerns from dissenting Justices that are similar to those raised by the petitioner with regard to the definiteness requirement. See *id.* at 732–733 (discussing history of dissenting views in cases and noting the doctrine may deter competitors "from engaging in legitimate manufactures," cause them to "invest by mistake in competing products that the patent secures," and result in "wasteful litigation * * * that a rule of literalism might avoid"). Yet this Court has in each instance "acknowledged this uncertainty as the price of ensuring the appropriate incentives for innovation." *Id.* at 732.

The Court has explained why the law countenances this result: if "patents were always interpreted by their literal terms, their value would be greatly diminished. Unimportant and

insubstantial substitutes for certain elements could defeat the patent, and its value to inventors could be destroyed by simple acts of copying." *Id.* at 731. This is an inherent limitation of claim drafting, because "the nature of language makes it impossible to capture the essence of a thing in a patent application." *Id.* And, while a patentee must particularly point out and distinctly claim his invention, "[t]he language in the patent claims may not capture every nuance of the invention or describe with complete precision the range of its novelty." *Id.*

These principles are of equal force with regard to the definiteness requirement. The Court has never demanded a complete absence of ambiguity from draftsmen seeking to secure to inventors their discoveries, and it should not do so now.

B. The Federal Circuit's Standard For Determining Definiteness Properly Looks To Whether A Person Of Ordinary Skill In The Relevant Art Would Understand What Is Claimed

1. Consistent with this Court's focus on how a person of ordinary skill in the art would interpret a claim, the Federal Circuit has framed its standard for definiteness by stating: "If one skilled in the art would understand the bounds of the claim when read in light of the specification, then the claim satisfies section 112 paragraph 2." *Exxon Research & Eng'g Co.* v. *United States*, 265 F.3d 1371, 1375 (Fed. Cir. 2001).

Although its published opinions reflect various formulations of this standard, as the Federal Circuit has explained, "[t]he common thread in all of these cases is that claims were held indefinite only where a person of ordinary skill in the art could not determine the bounds of the claims, i.e., the claims were insolubly ambiguous." *Halliburton Energy Servs., Inc.* v. *M-I LLC*, 514 F.3d 1244, 1249 (Fed. Cir. 2008). As used by that court, "insolubly ambiguous" is not an expression of a rigid rule, as some have argued, but rather a shorthand manner of summarizing the myriad of ways in which a patent claim can fail to satisfy the definiteness requirement of Section 112. For example, the Federal Circuit has held claims indefinite where a patent term is entirely dependent on a person's aesthetic or subjective opinion, *e.g. Datamize, LLC* v. *Plumtree Software, Inc.*, 417 F.3d 1342, 1366 (Fed. Cir. 2005); where a person of ordinary skill cannot determine which of multiple techniques yielding different results should be used to measure a claimed numeric limitation, *e.g. Honeywell Int'l, Inc. v. Int'l Trade Comm'n*, 341 F.3d 1332, 1340 (Fed. Cir. 2003); where a construction can be articulated, but a person of ordinary skill cannot translate the definition into meaningfully precise claim scope, *e.g. Halliburton*, 514 F.3d at 1251; where a typographical error in a claim could be corrected in multiple ways, but a person of ordinary skill cannot determine which is correct, *e.g.*, *Novo Indus., L.P.* v. *Micro Molds Corp.*, 350 F.3d 1348, 1354 (Fed. Cir. 2003); and where incurable technical defects are

present.[8] To be sure, the phrase "insolubly ambiguous" is perhaps more susceptible to misinterpretation by district courts than more conventional formulations that the Federal Circuit has articulated in other cases. But the court's use of the phrase in cases where a person of ordinary skill would not know what is claimed demonstrates that the "common thread" in these cases is the definiteness principle articulated by this Court.

2. Few patent practitioners would disagree that the types of claims identified in the cases noted above are indefinite. Petitioner's complaint involves a different kind of indeterminacy claim: that a claim should be found to be indefinite *per se* when the claim language is susceptible to more than one reasonable reading.

But petitioner's proposed test is incompatible with this Court's indefiniteness jurisprudence. Otherwise, the mere amenability of an issued patent claim to more than one reasonable construction, without more, would have required a different result in *Eibel Process*, as either "substantial" and "high" could

---

[8] For example, a patent claim to a particular machine or system is indefinite where it contains a term that describes a function, but discloses no structural component to perform that function. See, *e.g.*, *Function Media, L.L.C.* v. *Google, Inc.*, 708 F.3d 1310, 1319 (Fed. Cir. 2013). A patent claim may also be indefinite if a claim term lacks antecedent basis and the meaning is not reasonably ascertainable to a person of ordinary skill. *Energizer Holdings, Inc.* v. *Int'l Trade Comm'n*, 435 F.3d 1366, 1370–1371 (Fed. Cir. 2006).

plainly mean any number of reasonable things. See 261 U.S. at 65–66.

Indeed, few patents will be so clear that *no* uncertainty can be raised as to the interpretation of their claims. To limit the inquiry to whether claim language is amenable to more than one reasonable interpretation, without more, as a test for definiteness would encourage litigants to advance "reasonable" interpretations of any term of an issued, presumed-valid patent, when the proper issue should be whether a court can resolve any real and concrete dispute between the parties regarding infringement or invalidity. Cf. *United Carbon*, 317 U.S. at 236 (purpose of requiring "reasonably clear-cut" claims is "to enable courts to determine whether novelty and invention are genuine").

Disputes over the meaning of particular terms in patent claims are routine, and resolving them is the familiar province of the court. See *Markman*, 517 U.S. at 390–391. In that role, the court determines what a hypothetical person of ordinary skill in the art would understand the boundaries of the claim to be in light of the patent specification and prosecution history. See *Phillips* v. *AWH Corp.*, 415 F.3d 1303, 1312-1313 (Fed. Cir. 2005); see also *Carnegie Steel*, 185 U.S. at 432 (noting that a "claim of a patent must always be explained by and read in connection with the specification"). When there is a concrete dispute between the parties as to what a person of ordinary skill would understand a patent to claim, any uncertainty that may exist until a court has resolved

the dispute through claim construction is simply an unavoidable byproduct of both the adversarial system and an effort to balance, as this Court has required, clarity in claim scope and incentives to innovate. See *Festo*, 535 U.S. at 731.

III. The Practical Effects Of Adopting Petitioner's Proposed Test Are Undesirable And Undermine The Purpose Of 35 U.S.C. § 112, Second Paragraph

Beyond upsetting the balance between the notice function of claims and the necessary imprecision of claim drafting, invalidating claims when more than one reasonable construction can be asserted will negatively affect both patent litigation in the district courts and patent prosecution practice before the U.S. Patent & Trademark Office.

First, accused infringers in patent litigation will have an incentive to frustrate the court's efforts to construe the asserted claims. Claim construction is a necessary predicate to the determination of infringement and many validity issues. *Vitronics Corp.* v. *Conceptronic, Inc.*, 90 F.3d 1576, 1581-1582 (Fed. Cir. 1996); *Beachcombers Int'l, Inc.* v. *WildeWood Creative Prods., Inc.*, 31 F.3d 1154, 1160 (Fed. Cir. 1994). If the existence of more than one reasonable claim construction establishes that a patent claim is indefinite, accused infringers will have a clear incentive to present multiple "reasonable" interpretations of the asserted claims, rather than advocating what they assert is the proper

construction of the claims, in an effort to establish that the claims are invalid as indefinite.[9]

Further, if parties were to present genuinely opposing constructions of claim language, the trial court could conclude the claims at issue were valid—as they are presumed to be—only if it determined that one of the parties' proposed constructions was not reasonable. Thus, the presentation of opposing, but presumptively reasonable, constructions would raise questions regarding the definiteness of the asserted claims in nearly every case. Moreover, a finding that a party's position was unreasonable would raise concerns for the determination of willful infringement or whether the case was "exceptional" for purposes of awarding attorney's fees. See *Bard Peripheral Vascular, Inc.* v. *W.L. Gore & Assocs., Inc.*, 682 F.3d

---

[9] A focus on whether claim terms are susceptible to multiple "reasonable" interpretations likewise would encourage litigants to dispute the meaning of tangential terms regardless of whether disputes regarding those terms meaningfully impact infringement or invalidity in the specific case. Determining the precise outer boundary of a claim offers little benefit when an infringer's conduct or the prior art is squarely in the center of the claimed subject matter. See, *e.g.*, *Abbott Labs.* v. *Baxter Pharm. Prods., Inc.*, 471 F.3d 1363, 1368 (Fed. Cir. 2006) (in anticipation analysis, "numerical exactitude" not required where any added precision was not necessary to resolve invalidity question). Patent law should not require courts to expend judicial resources on resolving claim-construction disputes under the guise of indefiniteness if the dispute does not affect substantive questions of infringement, invalidity, or the like. See, *e.g.*, *Vivid Techs., Inc.* v. *Am. Sci. & Eng'g, Inc.*, 200 F.3d 795, 803 (Fed. Cir. 1999) (noting that "only those terms need be construed that are in controversy, and only to the extent necessary to resolve the controversy").

1003, 1006 (Fed. Cir. 2012); *Machinery Corp. of Am.* v. *Gullfiber AB*, 774 F.2d 467, 473-474 (Fed. Cir. 1985).

Finally, any benefits to be derived from petitioner's stringent definiteness requirement would be outweighed by its negative effects on both patent infringement litigation and patent prosecution practice before the U.S. Patent & Trademark Office. As discussed above, this Court's and the Federal Circuit's balanced approach to indefiniteness accommodates the inherent difficulty of reducing an invention to words. If that balance were shifted in favor of a more stringent standard for issued patents, patent practitioners would be forced to draft many more claims to try to capture every possible variation of an invention and provide alternate claim language to steel against later possible determinations of indefiniteness. Such a practice would increase the burden of examination and lead to inefficient practice.

CONCLUSION

For the reasons set forth above, the ABA urges the Court to reaffirm that, in determining whether a patent claim satisfies the definiteness requirement of Section 112, second paragraph, the courts should continue to look to whether a person of ordinary skill in the art would understand the bounds of the claim in light of the specification and prosecution history.

Respectfully submitted.

Of Counsel:
JOHN P. ELWOOD
WILLIAM L. LAFUZE
STEPHEN C. STOUT
AJEET P. PAI

JAMES R. SILKENAT
Counsel of Record
PRESIDENT,
AMERICAN BAR
ASSOCIATION
321 N. Clark Street
Chicago, IL 60654
(312) 988-5000
abapresident@
americanbar.org

Counsel for Amicus Curiae

MARCH 3, 2014

AMERICAN BAR ASSOCIATION

ADOPTED BY THE HOUSE OF DELEGATES

AUGUST 8-9, 2011

RESOLUTION 117

RESOLVED, That the American Bar Association supports the continued application by courts of the following legal principles to determine if an issued patent claim meets the definiteness requirement under 35 U.S.C. section 112, second paragraph—

(1) A claim meets the definiteness requirement if a person of ordinary skill in the relevant art would understand what is claimed;

(2) The determination of whether a person of ordinary skill in the relevant art would understand what is claimed depends on whether the issued patent claim in question can be construed by a court to the extent necessary to resolve any real and concrete dispute between the parties.

(3) Use of relative language or words of degree in an issued patent claim does not itself render a patent claim indefinite;

(4) The application of different definiteness standards in the Patent Office for determining patentability and in the courts for determining

validity does not conflict given the different nature of the proceedings; and

(5) The amenability of an issued patent claim to more than one reasonable construction does not itself render that claim indefinite if a court, by applying established principles of claim construction, can reasonably choose one of those possible constructions to resolve any real and concrete dispute between the parties.

REPORT

The Section of Intellectual Property Law asks for approval of this Resolution by the House of Delegates, which would support an Association brief amicus curiae in the U.S. Supreme Court in support of the respondent in the case of *Enzo Biochem., Inc. v. Applera Corp.*, 599 F.3d 1325 (Fed. Cir. 2010), *rehearing denied*, 605 F.3d 1347 (2010). A petition for writ of certiorari to review a decision of the U.S. Court of Appeals for the Federal Circuit ("Federal Circuit") in this case was filed in the Supreme Court on September 23, 2010. On December 13, 2010, the Supreme Court invited the Acting Solicitor General to file a brief in this case expressing the views of the United States Government. The report cannot be considered by the House of Delegates at a time later than the 2011 Annual Meeting since, if the writ of certiorari is granted during the October 2010 term of the Court, the deadline for filing the amicus brief in the Supreme Court will be reached before the next meeting of the House of Delegates.

The Resolution would support affirming the decision of the court below, in which the Federal Circuit reversed a summary judgment of the district court that held certain patent claims invalid by reason of indefiniteness. The "definiteness requirement" arises from the language of section 112 of the Patent Act (35 U.S.C. 112), which states that a patent must include "one or more claims particularly pointing out and distinctly claiming the subject matter which the applicant regards as his invention." Since its creation in 1982, the Federal Circuit has had jurisdiction over all patent appeals. The Resolution supports the continued application of rules of construction developed by the Federal Circuit for determining if an issued patent claim meets the statutory definiteness requirement. That requirement is met when a person of ordinary skill in the art would understand what is claimed, and that determination depends on whether the issued patent claim in question can be construed by a court to the extent necessary to resolve any real and concrete dispute between the parties regarding infringement or invalidity.

The Resolution further supports continued recognition by courts that use of relative language or words of degree in an issued patent claim does not itself render a patent claim indefinite, and that application of different definiteness standards by the U.S. Patent and Trademark Office for determining patentability and by courts for determining validity of already issued patents do not conflict given the different nature of proceedings before the USPTO and an Article III Court.

Finally, the Resolution supports continued recognition that an issued patent claim that is amenable to more than one reasonable construction is not indefinite if a court, by applying established principles of claim construction, can reasonably choose one of those possible constructions to resolve any real and concrete dispute between the parties regarding infringement or invalidity.

The Council of the Section of Intellectual Property approved this resolution and the accompanying report on March 15, 2011.

The Issue in Dispute

On September 23, 2010, Applera Corporation and Tropix Incorporated (together "Applera") filed a Petition for Writ of Certiorari with the United States Supreme Court, requesting review of the definiteness requirement under U.S. patent law as applied by the Federal Circuit in this case. More specifically, Applera's Petition asks the Supreme Court to decide whether the Federal Circuit's current standard for definiteness – which Applera asserts to be that a claim is definite so long as the claim language is not "insolubly ambiguous," or is "merely capable of being construed" – is consistent with the statutory language of 35 U.S.C. § 112, 2nd paragraph, which states that a patent must include "claims particularly pointing out and distinctly claiming the subject matter which the applicant regards as his invention." 35 U.S.C. § 112, ¶ 2.

Applera's petition comes following a March 2010 decision by the Federal Circuit reversing the district

court's summary judgment decision in *Enzo Biochem v. Applera* finding several of Enzo Biochem's asserted patent claims invalid for indefiniteness. The patent claims in question are drawn to labeled polynucleotides and their use to detect specific nucleic acid sequences (*i.e.*, DNA sequences). In May 2010, the Federal Circuit denied Applera's request for a panel rehearing or rehearing *en banc*.

Applera's position before the Supreme Court is that the Federal Circuit's current indefiniteness standard is inconsistent with the statutory language of § 112, and its primary purpose: to put the public on notice of what the invention is and what are its metes and bounds. Applera argues that the Federal Circuit's "merely capable of being construed" and "insolubly ambiguous" alleged standards make it too easy for a patent claim to be found definite, or too difficult for a claim to be found indefinite. Applera states the question presented to be as follows:

> For a patent to be valid, its claims must be 'definite' – the patent must include 'claims *particularly pointing out* and *distinctly claiming* the subject matter which the applicant regards as his invention.' 35 U.S.C. § 112 ¶ 2 (emphasis in original). The Federal Circuit holds that this requirement of 'particular[ity]' and 'distinct[ness]' is satisfied so long as claim language is not 'insolubly ambiguous,' or is merely capable of being construed. The question presented is: Whether the Federal Circuit's standard for definiteness is consistent with the language of § 112.

Applera's Sept. 23, 2010 Petition at (i).

The Definiteness Requirement and How the Resolution Addresses It

It is commonly understood that the standard for assessing whether a patent claim is sufficiently definite under 35 U.S.C. § 112, is whether "one skilled in the art would understand the bounds of the claim when read in light of the specification."[1] The Federal Circuit aptly notes that "[w]hile th[is] standard is easy to state, it has not always proved easy to apply." However, from this general principle, it logically follows that whether a patent claim is definite under § 112 necessarily depends on whether the claim can be construed by a court in order to resolve a real or concrete dispute between the parties regarding infringement of invalidity. Indeed, this analysis furthers the policies behind the definiteness requirement: (1) "to provide clear warning to others as to what constitutes infringement of the patent," and (2) "to provide a clear measure of the invention in order to facilitate determinations of patentability [*i.e.*, novelty and non-obviousness]."[2]

Most would agree that it is relatively easy to determine that a claim fails to meet the definiteness requirement of § 112, ¶ 2 if the claim is completely and utterly incapable of being construed, or carries

---

[1] *Exxon Research & Eng'g Co. v. United States*, 265 F.3d 1371, 1375 (Fed. Cir. 2001).

[2] 3 Donald S. Chisum, Chisum on Patents § 8.03 (2009).

with it no objective standard or measurement by which the public can determine the scope of the claimed invention. Less certain, however, is the appropriate outcome when the patent claim at issue is amenable to more than one reasonable construction, or contains a term of degree and there exists intrinsic evidence that provides some indicia of how that term should be defined. These are some of the issues at play in the *Applera* matter, and which make drafting an "all encompassing" resolution on this matter more difficult than with other cases.

The Resolution attempts to "flesh out" the requirement for definiteness of *issued* patent claims in as succinct a manner as possible, and to address the competing questions presented by Petitioner, Applera, and Respondent, Enzo Biochem. To this end, the Resolution addresses situations routinely seen in the context of a definiteness analysis, such as when words of degree are used in a patent claim (*e.g.*, substantially or approximately), or when a claim is capable of more than one plausible construction. The policy reflected in the Resolution seeks to achieve a balance between respecting the validity of a patent once issued, and the need for the public to understand the boundaries of a patented invention in order to avoid infringement. This balance is met with the language of the Resolution. The Section of Intellectual Property Law advocates adoption by the House of Delegates of the policy reflected in the Resolution, for at least the following reasons:

- Because an issued patent claim is presumed valid, a heightened evidentiary standard is required in order to invalidate such claim (*i.e.*,

clear and convincing evidence). The current definiteness standards followed by the Federal Circuit, and expressed in the Resolution, comport with this presumption of validity.

- The law supports the notion that a court only must construe a claim to the extent necessary to resolve real disputes of infringement and validity between the parties. Restricting a claim construction/definiteness analysis to these circumstances prevents bogus indefiniteness claims, and advances the policies behind the definiteness requirement: (1) to put the public on notice of the scope of the invention to avoid infringement; and (2) to determine the scope of the invention as applied against prior art. The Resolution follows this principle.

- The law recognizes that in construing a claim term, some imprecision in the judicial construction is permissible so long as the fact-finder can be given objective criteria for deciding the infringement or invalidity issue. The Resolution does not require absolute precision in order to meet the definiteness requirement.

- The law recognizes that a claim that can be construed is not automatically definite. Indeed, if the construed claim cannot be meaningfully applied (*i.e.*, to determine infringement or validity), it will be invalid for indefiniteness. The Resolution incorporates this principle, by stating that a claim is not indefinite if the

claim in question can be construed "*to resolve any real or concrete dispute between the parties regarding infringement or invalidity.*"

- As the Federal Circuit has recognized, difficulty in construing a claim does not mean the claim is indefinite. To find otherwise would result in a great number of claims being invalidated on indefiniteness grounds.

- That the U.S. Patent and Trademark Office and Article III Courts apply somewhat different standards when conducting a definiteness analysis does *not* mean there is a real conflict that needs to be rectified. Indeed, these different standards are justified given the different roles played by the PTO and courts, and different rules under which each body operates when construing claims. The Resolution reflects this understanding.

It is important to remember the need for balance between clarity and flexibility when considering the most appropriate standard for definiteness under § 112. Absolute precision should *not* be required when drafting patent claims. The Supreme Court recognized this in its *Festo* decision by noting that patent claims are necessarily imprecise since an invention is a "tangible" thing, with its verbal description merely an "afterthought written to satisfy the requirements of patent."[3] Thus, a patent claim's

---

[3] *Festo Corp. v. Shoketsu Kinzoku Kogyo Kabushiki Co., Ltd.*, 535 U.S. 722, 731 (2002).

lack of clarity is a necessary evil to ensure incentives to innovate. As the Supreme Court further noted, "[i]f patents were always interpreted by their literal terms, their value would be greatly diminished. Unimportant and insubstantial substitutes for certain elements could defeat the patent, and its value to inventors could be destroyed by simple acts of copying. For this reason, the clearest rule of patent interpretation, literalism, may conserve judicial resources but is not necessarily the most efficient rule."

The Resolution Supports Well-Established Policy and Precedent Concerning the Definiteness Requirement for Issued Patent Claims

The assertion in the Resolution that a claim is definite when a court can construe the claim "to the extent necessary to resolve any real and concrete dispute between the parties regarding infringement or invalidity," gives effect to several well-established principles of claim construction and indefiniteness, that, for several reasons, should be preserved.

First, the law recognizes that a court, when construing a claim of a patent, does *not* have to construe the claim terms to a degree that definitively stakes out the absolute bounds of the claim's scope. Rather, a court only has to construe a disputed claim limitation *to the extent necessary to decide the specific and concrete infringement or invalidity dispute before*

it.[4] Wise judicial policy underlies this principle. Patent law should not require courts to expend judicial resources in trying to determine alleged claim-construction disputes under the guise of considering indefiniteness if the claim-construction

---

[4] *See Vivid Techs., Inc. v. Am. Science & Eng'g, Inc.*, 200 F.3d 795, 803 (Fed. Cir. 1999) ("... only those terms need be construed that are in controversy, and only to the extent necessary to resolve the controversy"). *Accord Abbott Labs. v. Baxter Pharmaceutical Prods., Inc.*, 471 F.3d 1363, 1368 (Fed. Cir. 2006) (in an anticipation analysis, ruling that the lower court did not have to provide "numerical exactitude" on construction of disputed claim term where any added precision was not necessary to resolve the invalidity question); *Pickholtz v. Rainbow Technologies, Inc.*, 284 F.3d 1365, 1374 (Fed. Cir. 2002) (after ruling that term "computer" would include some undefined peripheral near the CPU, the court stated "[w]e need not, and indeed cannot, attempt to precisely define which peripherals may be part of the 'computer' as used in the '353 patent for all cases. The accused device in this case is certainly such a peripheral . . ."); *EMI Grp. N. Am., Inc. v. Intel Corp.*, 157 F.3d 887, 895 (Fed. Cir. 1998) ("[I]t is irrelevant whether the district court achieved a technologically perfect definition, because there is no dispute that the corresponding step of the Intel process is within the literal scope of [the claim limitation]. Thus we do not attempt to decide, de novo, the correct meaning of [the claim limitation]."). *See also Wilson Sporting Goods Co. v. Hillerich & Bradsby Co.*, 442 F.3d 1322, 1326 (Fed. Cir. 2006) ("This court reviews claim construction only as necessary to reach that final judgment on an infringement cause of action."); *Sandisk Corp. v. Memorex Prods., Inc.*, 415 F.3d 1278, 1292 (Fed. Cir. 2005) (refusing to construe claim term "array" on appeal after determining that construction proposed by accused infringer would not impact court's resolution of the appeal).

dispute does not impact whether infringement exists, the prior art invalidates the claim, or the claim fails to comply with the written description, enablement, or best mode requirements.[5] Otherwise, clever counsel will be sure to raise an interpretative dispute that will implicate concerns of indefiniteness.[6]

---

[5] Indeed, in the context of seeking to reduce the burden patent litigation imposes on the judiciary, one district court requires that for every claim term a patent litigant wants the court to construe in the *Markman* phase of the case, the litigant must first show how or why the construction of the disputed claim term will impact the infringement or invalidity issues in the case before the court will agree to construe the term. *Sandisk Corp. v. Zotek Electronic Co., Ltd.*, No. 07-cv-605-bbc, 2010 WL 2671579, at *1 (W.D. Wis. July 1, 2010) (ruling that the parties presented sufficiently persuasive reasons for the court to construe 13 of the 15 requested claim terms in a pre-summary judgment *Markman* proceeding, but that they failed to present persuasive reasons for two of the requested terms because the parties failed to "describe[] how their disagreements about the meaning of those terms relate to any dispute regarding infringement or invalidity"); *IP Cleaning S.p.A. v. Annovi Reverberi, S.p.A.*, No. 08-cv-147-bbc, 2008 WL 5119586, at *1 (W.D. Wis. Dec. 4, 2008) (refusing to construe any claim terms because parties failed to comply with the court's order to "persuade the court that construction of each specified term is necessary to resolve a disputed issue concerning infringement or invalidity").

[6] As one district court cogently remarked:

> The construction of a single word or phrase in a patent claim is often the dispositive issue. Attorneys therefore marshal impressive arsenals of legal precedent, technical exegesis, record citations, canons of construction, extrinsic evidence, and--above all—the most clever reasoning to

Consequently, indefiniteness disputes over a theoretical vagueness in a claim's scope that do not impact determining infringement or invalidity in view of the prior art or the sufficiency of the specification under § 112, ¶ 1, only serve to allow an accused infringer a chance to evade a patent based on the alleged inadequacies of claim drafting that have no relation to the merits of whether the invention has been misappropriated or whether a patent should have been granted.[7]

---

persuade a judge that a word such as "as," "or," or "is" isn't what she thought it might be.

VLT Corp. v. Unitrode Corp., 130 F. Supp. 2d 178, 186 (D. Mass. 2001); *see also, Pfizer, Inc. v. Int'l Rectifier Corp.*, 538 F.2d 180, 196 (8th Cir. 1976) ("An infringement defendant in complex litigation should not be permitted to sidestep these main issues [infringement and invalidity] by nit-picking the patent file in every minute respect with the effect of trying the patentee personally, rather than the patent. A patentee's oversights are easily magnified out of proportion by one accused of infringement seeking to escape the reach of the patent by hostilely combing the inventor's files in liberal pretrial discovery proceedings."); *Predicate Logic, Inc. v. Distributive Software, LLC*, 544 F.3d 1298, 1300 (Fed. Cir. 2008) ("When the complexities inherent in the English language meet the peculiarities of patent jargon, the result can be the bane of many unsuspecting patentees.")

[7] The law permits a district court to clarify or modify any of its claim construction rulings as a case progresses. *Jack Guttman, Inc. v. Kopykake Enters., Inc.*, 302 F.3d 1352, 1361 (Fed. Cir. 2002) ("District courts may engage in a rolling claim construction, in which the court revisits and alters its interpretation of the claim terms as its understanding of the

Second, in construing a claim term, some imprecision in the judicial construction is permissible so long as the fact-finder can be given objective criteria for deciding the infringement or invalidity issue. Thus, the Federal Circuit has instructed that "a sound claim construction need not always purge every shred of ambiguity. The resolution of some line-drawing problems . . . is properly left to the trier of

---

technology evolves. This is particularly true where issues involved are complex, either due to the nature of the technology or because the meaning of the claims is unclear from the intrinsic evidence."). *Accord Pressure Prods. Med. Supplies, Inc. v. GreatBatch Ltd.*, 599 F.3d 1308, 1315-16 (Fed. Cir. 2010) (rejecting argument that district court procedurally erred in issuing a revised claim construction of a means-plus-function limitation during the course of the trial when it became clear from the questions to the witnesses that the parties had a dispute over the scope of the corresponding structure applicable to the means-plus-function limitation based on the original claim construction). Accordingly, should an indefiniteness dispute arise based on a claim construction rendered in a *Markman* proceeding, the parties should request the district court to attempt to revise or clarify its claim construction to address the indefiniteness challenge before holding the claim invalid for indefiniteness. *Cf. Wisconsin Alumni Research Found. v. Intel Corp.*, No. 08-cv-78-bbc, 2009 WL 3003835, at *22-*23 (W.D. Wis. Sept. 17, 2009) (criticizing parties for waiting too long to bring to court's attention a further dispute as to a claim construction the court had previously made, and while providing a further construction of the term since the original construction did not address the specific aspect of the dispute, noting that neither party could claim any prejudice from the late construction due to their tardiness in bringing the issue to the court's attention).

fact."[8] This principle finds support in the Supreme Court's opinion in *Eibel Process Co. v. Minnesota & Ontario Paper Co.*, 261 U.S. 45 (1923). There the Court held that claim terms limiting the pitch of a guide wire to something that was "high" and "substantial" was not fatally vague because the specification provided an example of what was "high" and "substantial" at one operating condition, and

---

[8] *Acumed LLC v. Stryker Corp.*, 483 F.3d 800, 806 (Fed. Cir. 2007) (affirming construction of term "curved shank" as being "a shank that has a bend or deviation from a straight line without sharp corners or sharp angles" and rejecting accused infringer's argument that the construction was indefinite since it did not define what was "sharp," the court noting that "[t]here may be some area of imprecision within the district court's 'without sharp angles' construction, but this accused product is in no danger of falling within that area."). *See, e.g.*, *Litecubes, L.L.C. v. Northern Light Prods., Inc.*, 523 F.3d 1353, 1373-74 (Fed. Cir. 2008) (for claims directed to a novelty ice cube that required that the "cube" have a filler material "made suitable to or fit for the specific use of retaining heat" when heated or retaining cold when cooled, ruling that it was a question of fact left to the jury as to how much the cubes had to help keep a drink cool or warm to meet the "suitable to . . . retain" limitation); *Cordis Corp. v. Medtronic AVE, Inc.*, 511 F.3d 1157, 1169 (Fed. Cir. 2008) (leaving methodology to make a measurement to show if a recited wall thickness was met as a factual question for the jury); *PPG Indus., Inc. v. Guardian Indus. Corp.*, 156 F.3d 1351, 1355 (Fed. Cir. 1998) (leaving to the jury question of what constituted a "material effect" in deciding whether accused product met a "consisting essentially of" limitation). *See generally*, Robert A. Matthews, Jr., ANNOTATED PATENT DIGEST § 4:58 Jury's Determination of the Actual Precision of the Claim; and § 23:11 Numerical Precision Not Necessarily Required.

those of skill in the art could apply the invention for other operating conditions and determine what would be "high" and "substantial" at these other operating conditions. *Id.* at 65-66.[9]

Third, the law recognizes that "[e]ven if a claim term's definition can be reduced to words, the claim is still indefinite if a person of ordinary skill in the art cannot translate the definition into meaningfully precise claim scope."[10] "Meaningfully precise" means that a fact-finder can use the construction to determine whether infringement exists or whether the prior art anticipates the claimed invention or renders it obvious. For example, if a claim construction determines that a claim requires a specific quantity of a parameter, with no vagueness in the amount of the parameter required, but there are multiple methods for measuring the parameter, with each method giving different results (*i.e.*, one that would show infringement, the other that would show no infringement, and there is no way to tell from the intrinsic and extrinsic evidence which measuring method should be used), the claim is indefinite.[11]

---

[9] *See also Wood v. Underhill*, 46 U.S. 1, 5-6 (1847) (specification for an invention directed to bricks made with coal dust that provided as a general rule that three-fourths of a bushel of coal-dust should be used to one thousand bricks and noted some exceptions to general rule in the case of certain types of clays used in the bricks was not too ambiguous or vague to render the patent invalid).

[10] *Halliburton Energy Serv., Inc. v. M-I, LLC*, 514 F.3d 1244, 1251 (Fed. Cir. 2008).

[11] *Honeywell Int'l, Inc. v. Int'l Trade Comm'n*, 341 F.3d 1332,

Under this set of facts, the claim is capable of being construed with an understandable and specific word formulation, but, under the circumstances, that formulation does not permit a fact finder to resolve a concrete dispute between the parties regarding infringement.

Similarly, if after applying all judicial tools of claim-construction analysis, a claim limitation of an issued patent remains susceptible to two or more reasonably plausible constructions, and infringement or invalidity will be established under one construction, but not the other, the claim is indefinite.[12] This fact situation can arise in the

---

1340-41 (Fed. Cir. 2003) (claims requiring performing a step of a method at a certain range of a "melting point elevation" was insolubly ambiguous where there were four possible methods of measuring the "melting point elevation," the different methods produced different results, a competitor could infringe if one measuring method was used, but not infringe if another method was used, and the claim language, written description, and prosecution history provided no guidance for determining which method or methods were encompassed by the claims); *Amgen, Inc. v. Hoechst Marion Roussel, Inc.*, 314 F.3d 1313, 1342 (Fed. Cir. 2003) (claims were indefinite where claim required a certain level of glycosylation and there were two tests for measuring the glycosylation level, and tests gave different results for the same sample, with one result meeting the claim limitation and the other result not meeting the limitation, and the inventor had not specified in the patent which test was to be used).

[12] *See, e.g., Union Pacific Resources Co. v. Chesapeake Energy Corp.*, 236 F.3d 684, 692 (Fed. Cir. 2001) (claim limitation that required a step of "comparing" characterizing information was indefinite where specification did not define what was meant by

context of correcting by claim construction an obvious typographical error in the printed version of the issued patent claim. If two or more corrections to the claim appear reasonable, and the tools of claim-construction analysis do not permit a court to select one of those corrections, the claim fails for indefiniteness.[13]

Fourth, we agree with the Federal Circuit that difficultly in construing a claim term should not provide grounds to find the claim indefinite. Judge Newman aptly summarized the policy reasons supporting this principle in *Exxon Research & Eng'g Co. v. United States*, where she stated:

> [C]ases frequently present close questions of claim construction on which expert witnesses, trial courts, and even the judges of this court may disagree. Under a broad concept of indefiniteness, all but the clearest claim construction issues could be regarded as giving rise to invalidating indefiniteness in the claims at issue. But we have not adopted that approach to the law of indefiniteness. We have not insisted that claims be plain on their face in

---

"comparing" but only suggested, without disclosing, a complex correlation procedure and the term could "undoubtedly have other meanings," in part "because the patent does not indicate that it is a technical or scientific term").

[13] *Novo Indus., L.P. v. Micro Molds Corp.*, 350 F.3d 1348, 1358 (Fed. Cir. 2003); *Gardner v. Toyota Motor Corp.*, NO. 2:08-cv-632-RAJ, 2009 WL 4110305, at *6 (W.D. Wash. Nov. 19, 2009).

> order to avoid condemnation for indefiniteness; rather, what we have asked is that the claims be amenable to construction, however difficult that task may be. If a claim is insolubly ambiguous, and no narrowing construction can properly be adopted, we have held the claim indefinite. If the meaning of the claim is discernible, even though the task may be formidable and the conclusion may be one over which reasonable persons will disagree, we have held the claim sufficiently clear to avoid invalidity on indefiniteness grounds. . . . *By finding claims indefinite only if reasonable efforts at claim construction prove futile, we accord respect to the statutory presumption of patent validity, . . . and we protect the inventive contribution of patentees, even when the drafting of their patents has been less than ideal.*

265 F.3d at 1375 (citations omitted) (emphasis added).

The Federal Circuit's decision in *Exxon Research & Eng'g v. United States* is the basis of petitioner Applera's representation that under Federal Circuit precedent, a claim is definite if is not "insolubly ambiguous" or is "merely capable of being construed." It should be noted that the Federal Circuit did not so hold, but only made an observation that in circumstances in which a claim is insolubly ambiguous *and* no narrowing construction can properly be adopted, the court has held the claim indefinite. It should also be noted that in the case below, the Federal Circuit did not rely on this alleged

standard, and in fact made no reference to its commentary in *Exxon Research* or to other similar commentary.

There Is No Real "Conflict" Between the Standards for Definiteness Followed by the U.S. Patent and Trademark Office Versus the Federal Circuit and Other Article III Courts

We also recognize that the U.S. Patent and Trademark Office ("PTO") and Article III Courts apply different definiteness standards for patentability and validity of patent claims. For the reasons discussed below, however, we do not view this difference as a "conflict" in the application of 35 U.S.C. § 112, ¶ 2.

First, the different standards utilized between the PTO and the courts result from the separate roles served when these entities analyze a patent claim for definiteness. The PTO functions in an *ex parte* capacity to ensure public disclosure of an invention in exchange for limited rights of exclusion. This role is critical to our patent system, not only to foster public disclosure, but also to avoid imposing on courts the burden of ferreting out the exact bounds of the patent grant:

> Since the act of 1836, the patent laws require that an applicant for a patent shall not only, by a specification in writing, fully explain his invention, but that he "shall particularly specify and point out the part, improvement, or combination which he claims as his own invention or discovery." This provision was

> inserted in the law for the purpose of relieving the courts from the duty of ascertaining the exact invention of the patentee by inference and conjecture, derived from a laborious examination of previous inventions, and a comparison thereof with that claimed by him. This duty is now cast upon the Patent Office. There his claim is, or is supposed to be, examined, scrutinized, limited, and made to conform to what he is entitled to. If the office refuses to allow him all that he asks, he has an appeal. But the courts have no right to enlarge a patent beyond the scope of its claim as allowed by the Patent Office, or the appellate tribunal to which contested applications are referred. When the terms of a claim in a patent are clear and distinct (as they always should be), the patentee, in a suit brought upon the patent, is bound by it.

Keystone Bridge Co. v. Phoenix Iron Co., 95 U.S. (5 Otto.) 274, 278 (1877).

Second, in the context of definiteness the PTO and Article III Courts perform different roles and by different rules. The PTO construes patent claims, in general, as broadly as possible in light of the specification but without consulting other claims, the prior art, or the prosecution history:

> [T]he PTO gives a disputed claim term its broadest reasonable interpretation during patent prosecution. The broadest reasonable interpretation rule recognizes that before a patent is granted the claims are readily

> amended as part of the examination process. Thus, a patent applicant has the opportunity and responsibility to remove any ambiguity in claim term meaning by amending the application. Additionally, the broadest reasonable interpretation rule serves the public interest by reducing the possibility that claims, finally allowed, will be given broader scope than is justified.

In re Bigio, 381 F.3d 1320, 1324 (Fed. Cir. 2004) (citations and quotations omitted).

By contrast, the principles of patent claim construction obligate courts to construe patent claims in light of the patent specification, the prosecution history, other patent claims, and the prior art. *Markman v. Westview Instruments, Inc.*, 52 F.3d 967, 979 (Fed. Cir. 1995) (en banc), aff'd, 517 U.S. 370 (1996). The objective, unlike that at the PTO, is geared to liberality and the preservation of validity:

> A patent should be construed in a liberal spirit, to sustain the just claims of the inventor. This principle is not to be carried so far as to exclude what is in it, or to interpolate anything which it does not contain. But liberality, rather than strictness, should prevail where the fate of the patent is involved, and the question to be decided is whether the inventor shall hold or lose the fruits of his genius and his labors.

Providence Rubber Co. v. Goodyear, 76 U.S. (9 Wall.) 788, 795-96 (1869).

Respectfully submitted,

Marylee Jenkins, Chair
Section of Intellectual Property Law
August 2011

AMICUS CURIAE BRIEF

RECORD
AND
BRIEFS

Supreme Court, U.S.
FILED
MAR - 3 2014
OFFICE OF THE CLERK

No. 13-369

In the Supreme Court of the United States

NAUTILUS, INC.,
Petitioner,

v.

BIOSIG INSTRUMENTS, INC.,
Respondent.

ON WRIT OF CERTIORARI
TO THE UNITED STATES COURT OF APPEALS
FOR THE FEDERAL CIRCUIT

Brief of Amicus Curiae American Intellectual Property Law Association in Support of Neither Party

WAYNE P. SOBON
President
AMERICAN INTELLECTUAL PROPERTY LAW ASSOCIATION
241 18th Street South
Suite 700
Arlington, VA 22202
(703) 415-0780

J. CAMPBELL BARKER
Counsel of Record
CHRISTOPHER R. JOHNSON
YETTER COLEMAN LLP
909 Fannin Street
Suite 3600
Houston, TX 77010
cbarker@yettercoleman.com
(713) 632-8000

Library of Congress
Law Library

TABLE OF CONTENTS

Interest of amicus curiae 1
Summary of argument 2
Argument 4
I. Both the Federal Circuit and petitioner use language that goes too far in stating the indefiniteness test. 4
A. A patent claim is definite if its meaning is reasonably clear to a person of skill in the art, in light of the patent specification and prosecution history. 4
B. Federal Circuit language describing that test may confuse and should be rejected. 7
C. The broadest form of petitioner's argument should also be rejected because a mere litigation dispute does not show invalidity. 9
II. The "spaced relationship" claim term is structural and distinct from the claim's functional terms. 13
A. Structural limitations like the "spaced relationship" term are different from functional terms. 13
B. A bright-line test for judging the definiteness of functional terms is unsound and would upset settled expectations. 19
Conclusion 25

TABLE OF AUTHORITIES

Cases:

Bates v. *United States*,
522 U.S. 23 (1997) 10

Bloom Eng'g Co. v. *N. Am. Mfg. Co.*,
129 F.3d 1247 (Fed. Cir. 1997)..... 22

Carnegie Steel Co. v. *Cambria Iron Co.*,
185 U.S. 403 (1902) 5, 6

Datamize, LLC v. *Plumtree Software, Inc.*,
417 F.3d 1342 (Fed. Cir. 2005)..... 7, 24

E.I. du Pont de Nemours & Co. v. *Allstate Ins. Co.*, 693 A.2d 1059 (Del. 1997)..... 11

E.I. du Pont de Nemours & Co. v. *Phillips Petrol. Co.*, 849 F.2d 1430 (Fed. Cir. 1988) 20

Exxon Research & Eng'g Co. v. *United States*,
265 F.3d 1371 (Fed. Cir. 2001)..... *passim*

Ferag AG v. *Quipp, Inc.*,
45 F.3d 1562 (Fed. Cir. 1995)..... 17

Festo Corp. v. *Shoketsu Kinzoku Kogyo Kabushiki Co.*, 535 U.S. 722 (2002)..... 23

General Electric Co. v. *Wabash Appliance Corp.*, 304 U.S. 364 (1938) 19

Graham v. *John Deere Co.*,
383 U.S. 1 (1966) 6, 25

Graver Tank & Mfg. Co. v. *Linde Air Prods. Co.*, 339 U.S. 605 (1950)..... 24

Halliburton Energy Servs., Inc. v. *M-I LLC*,
514 F.3d 1244 (Fed. Cir. 2008)..... 24

Cases—continued:

In re Schreiber,
128 F.3d 1473 (Fed. Cir. 1997) 21

In re Swinehart,
439 F.2d 210 (C.C.P.A. 1971) 20, 21

In re Wands,
858 F.2d 731 (Fed. Cir. 1988) 23

IPXL Holdings, L.L.C. v. Amazon.com, Inc.,
430 F.3d 1377 (Fed. Cir. 2005) 16

John Mezzalingua Assocs., Inc. v. *Int'l Trade Comm'n*, 437 Fed. App'x 886 (Fed. Cir. 2010) 16

Karsten Mfg. Corp. v. *Cleveland Golf Co.*,
242 F.3d 1376 (Fed. Cir. 2001) 17

Lemelson v. *TRW, Inc.*,
760 F.2d 1254 (Fed. Cir. 1985) 17

Lighting Ballast Control LLC v. *Philips Elecs. N. Am. Corp.*, No. 2012-1014, 2014 WL 667499 (Fed. Cir. Feb. 21, 2014) 25

Marine Polymer Techs., Inc. v. *HemCon, Inc.*,
672 F.3d 1350 (Fed. Cir. 2012) 22

Markman v. *Westview Instruments, Inc.*,
517 U.S. 370 (1996) 6, 11, 23, 25

Med. Device Techs., Inc. v. *C.R. Bard, Inc.*,
7 Fed. App'x 945 (Fed. Cir. 2001) 17

Merrill v. *Yeomans*,
94 U.S. 568 (1876) 12

Minerals Separation, Ltd. v. *Hyde*,
242 U.S. 261 (1916) 18, 20

Cases—continued:

Orthokinetics, Inc. v. *Safety Travel Chairs, Inc.*, 806 F.2d 1565 (Fed. Cir. 1986) 19, 20

Phillips v. *AWH Corp.*, 415 F.3d 1303 (Fed. Cir. 2005) 6

Pocahontas Mineral Ltd. Liab. Co. v. *CNX Gas Co.*, 666 S.E.2d 527 (Va. 2008) 11

Schriber-Schroth Co. v. *Cleveland Trust Co.*, 311 U.S. 211 (1940) 6

Seagull Energy E&P, Inc. v. *Eland Energy, Inc.*, 207 S.W.3d 342 (Tex. 2006) 11

Star Scientific, Inc. v. *R.J. Reynolds Tobacco Co.*, 537 F.3d 1357 (Fed. Cir. 2008) 7, 8

Sun Coast Merch. Corp. v. *CCL Prods. Enters., Inc.*, 179 Fed. App'x 6 (Fed. Cir. 2006) 16

Tex. Instruments Inc. v. U.S. Int'l Trade Comm'n, 988 F.2d 1165 (Fed. Cir. 1993) 16

United Carbon Co. v. *Binney & Smith Co.*, 317 U.S. 228 (1942) 4, 5, 6, 7

United States v. *Rodgers*, 466 U.S. 475 (1984) 10

Vehicular Techs. Corp. v. *Titan Wheel Int'l, Inc.*, 212 F.3d 1377 (Fed. Cir. 2000) 17

W.L. Gore & Assocs., Inc. v. *Garlock, Inc.*, 721 F.2d 1540 (Fed. Cir. 1983) 22

Statutes:

35 U.S.C. § 103 5

Statutes—continued:

35 U.S.C. § 112 ..... 2, 4

35 U.S.C. § 112, ¶ 1 5

35 U.S.C. § 112, ¶ 2 4

35 U.S.C. § 252 22

35 U.S.C. § 307 22

Miscellaneous:

Tom Brody, *Functional Elements Can Ensure Allowance of Genus Claims*, 90 J. Pat. & Trademark Off. Soc'y 621 (2008) 20

Lorance L. Greenlee, *Biotechnology Patent Law*, 68 Denv. U. L. Rev. 127 (1991) 21

Supreme Court Rule 37.3(a) 1

Supreme Court Rule 37.6 1

U.S. Patent No. 5,337,753 ..... 14, 15, 16, 18

INTEREST OF AMICUS CURIAE

The American Intellectual Property Law Association is a national bar association of approximately 15,000 members engaged in private and corporate practice, in government service, and in the academic community. [1] The Association's members represent a wide and diverse spectrum of individuals, companies, and institutions involved directly and indirectly in the practice of patent law and other fields of law affecting intellectual property. The Association's mission includes providing courts with objective analysis to promote an intellectual-property system that stimulates and rewards invention while balancing the public's interest in healthy competition, reasonable costs, and basic fairness.

The Association has no stake in the parties to this litigation or in the result of this case, other than

---

[1] Pursuant to Supreme Court Rule 37.6, the Association states that this brief was not authored in whole or in part by counsel to a party, and that no monetary contribution to the preparation or submission of this brief was made by any person or entity other than the Association and its counsel. After reasonable investigation, the Association believes that (i) no member of its Board of Directors or Amicus Committee who voted to file this brief, or any attorney in the law firm or corporation of such a member, represents a party to this case; (ii) no representative of any party to this case participated in the authorship of this brief; and (iii) no one other than the Association or its members who authored this brief, and their law firms or employers, made a monetary contribution to the preparation or submission of this brief.

its interest in the correct and consistent interpretation of law affecting intellectual property.[2]

SUMMARY OF ARGUMENT

1. To particularly point out the matter regarded as the invention, as required by 35 U.S.C. § 112, a patent claim must be reasonably clear to a person of ordinary skill in the relevant technical field, reading the claim in light of the rest of the patent specification and the record of the patent application's prosecution. If that process of claim construction makes the claim's scope reasonably clear, the claim is not indefinite. Only if the claim is not understandable to one skilled in the art does indefiniteness exist.

It may take serious study for a layperson to fully grasp technological principles in a field and how those principles inform a practitioner's understanding of a patent claim. Because that process may be complex, litigating parties can have different views of a claim's scope. But competing constructions do not show ambiguity merely because they are advanced, and competing constructions should not be conflated with the indefiniteness of a patent claim.

While those definiteness principles are nothing new, shorthand phrases trying to convey what those principles mean can be dangerous. They can take on a life of their own and mislead by their brevity. The Federal Circuit's "not capable of construction" and "insolubly ambiguous" language has that tendency

---

[2] Petitioner and respondent have filed letters granting blanket consent to the filing of amicus curiae briefs.

and should be disapproved for that reason. Although that language is correct in a sense, it can also suggest that a patent claim is definite so long as a court chooses to adopt any text as a construction. That is not correct.

While certain Federal Circuit language may suggest too little rigor in applying the definiteness requirement, the broadest form of petitioner's argument goes too far in the other direction. Clarity is not disproved by the mere fact of disagreement among attorneys or jurists about a conclusion. Indeed, this Court views claim construction as a first step in patent litigation, with the understanding that parties may not agree on a construction to be provided to the jury. Every disagreement among reasonable parties in litigation does not show fatal ambiguity. Were that the rule, there would be few remaining patents.

2. On its face, the "spaced relationship" claim term requires a physical spacing, and its meaning is clear from the patent. That structural claim term is simple, widely-used, and definite.

The other point of contention here is the claim's definiteness in light of its separate, functional terms. Functional limitations generally define things or acts by what they accomplish or properties they have, rather than by describing physical structure. Such functional limitations are long-accepted and widely used, especially in such fields as the chemical and biotechnology arts. The clarity of a functional limitation is like the clarity of a structural limitation; it comes from the patent claim and specification and the common knowledge of the patent's intended audience, those of ordinary skill in the relevant art.

There is no justification for a bright-line rule that testing must be defined or cited in the patent for every functional claim. That would ignore the perspective of the skilled artisan and violate the settled expectations of the inventing community.

ARGUMENT

I. Both The Federal Circuit And Petitioner Use Language That Goes Too Far In Stating The Indefiniteness Test.

The Federal Circuit correctly holds that a patent claim must be sufficiently particular to inform the public of what is claimed as the invention. Pet. App. 13a. As this Court has stated, a claim's limitations must be "reasonably clearcut." *United Carbon Co.* v. *Binney & Smith Co.*, 317 U.S. 228, 236 (1942).

Certain language used by the Federal Circuit, however, might be read to allow ambiguous patent claims, and that language should be disapproved. At the same time, this Court should reject the broadest form of petitioner's test. Litigation over the correct interpretation of a patent claim does not show fatal ambiguity.

A. A patent claim is definite if its meaning is reasonably clear to a person of skill in the art, in light of the patent specification and prosecution history.

A patent claim gives notice of the things or acts reserved from public use, so the claim's scope must be clear. 35 U.S.C. § 112, ¶ 2;[3] *United Carbon*, 317

---

[3] The version of § 112 applicable and cited here recites the definiteness requirement in its second paragraph. A statutory reorganization, applicable to newer patent

U.S. at 236 ("The statutory requirement of particularity and distinctness in claims is met only when they clearly distinguish what is claimed from what went before in the art and clearly circumscribe what is foreclosed from future enterprise.").

Clarity, however, is not judged by simply reading the patent claim and stopping. A patent claim is part of a larger specification of the invention, itself written for other practitioners in the relevant technical field—not for the uninitiated but rather for those of ordinary skill in the art. See 35 U.S.C. § 112, ¶ 1 (requiring that the patent's specification enable "any person skilled in the art" of relevance to practice the invention); *Carnegie Steel Co.* v. *Cambria Iron Co.*, 185 U.S. 403, 437 (1902) ("The specification of the patent is not addressed to lawyers, or even to the public generally, but to the manufacturers of steel; and any description which is sufficient to apprise them in the language of the art of the definite feature of the invention, and to serve as a warning to others of what the patent claims as a monopoly, is sufficiently definite to sustain the patent"); cf. 35 U.S.C. § 103 (providing that the obviousness of a claimed invention is viewed from the perspective of "a person having ordinary skill in the art to which the claimed invention pertains").

Understanding the scope of a patent claim thus requires a potential competitor—or a jurist asked to rule on invalidity—to read the claim language in light of the entire specification, viewed from the

---

applications, labels that requirement as subsection (b) of § 112. See Pet. App. 12a n.8 (Federal Circuit opinion noting amendment).

perspective of a person of ordinary skill in the art. See *Markman* v. *Westview Instruments, Inc.*, 517 U.S. 370, 389 (1996) (noting "the necessarily sophisticated analysis of the whole document, required by the standard construction rule that a term can be defined only in a way that comports with the instrument as a whole"); *Schriber-Schroth Co.* v. *Cleveland Trust Co.*, 311 U.S. 211, 217 (1940) ("The claims of a patent are always to be read or interpreted in the light of its specifications . . . ."); *Carnegie Steel*, 185 U.S. at 437 (noting the relevance of ordinary knowledge in the art: "That which is common and well known is as if it were written out in the patent . . . .").

Proper construction of a patent claim also requires considering the record of the patent application's prosecution in the patent office. *Graham* v. *John Deere Co.*, 383 U.S. 1, 33 (1966) ("It is, of course, well settled than an invention is construed not only in light of the claims, but also with reference to the file wrapper or prosecution history in the Patent Office."). That history may also inform the meaning of claim language by showing how the inventor and patent office understood it. *Phillips* v. *AWH Corp.*, 415 F.3d 1303, 1317 (Fed. Cir. 2005) (en banc) (explaining that the inquiry often focuses on whether the inventor's disclaimer of a possible broad interpretation in order to secure the patent shows that claim language is used in a narrower sense).

If, after carrying out that process of claim construction, the scope of a patent claim is "reasonably clearcut," *United Carbon*, 317 U.S. at 236, the claim satisfies the definiteness requirement.

Only if that process of claim construction leaves a claim term's meaning ambiguous will the claim be invalid for failing to particularly point out what is regarded as the invention. *Id.*

B. Federal Circuit language describing that test may confuse and should be rejected.

The Federal Circuit generally applies that test, but sometimes describes it by stating that a claim is indefinite only if it is "not amenable to construction" or "insolubly ambiguous." *E.g.*, Pet. App. 13a. Read in isolation, that language may mislead tribunals and litigants.

The phrase "not amenable to construction" may suggest that a patent claim is adequate so long as a court adopts any text as a definition of its scope. An inquiry of that nature would do little work, as courts can define claim terms with a bare synonym. The ability to "construe" a term, in that sense, says little about the term's particularity: A synonym for a clear term may be just as clear, and a vague term may be converted to an equally vague synonym.

Of course, the Federal Circuit has appreciated that fact. For example, in *Datamize, LLC* v. *Plumtree Software, Inc.*, 417 F.3d 1342 (2005), the Federal Circuit held indefinite a claim requiring something to be "aesthetically pleasing," even though that term might be defined as "beautiful" or "having beauty that gives pleasure or enjoyment." *Id.* at 1346, 1356. The court recognized that the clarity problem was the term's subjectivity, even if it could be "construed" in the sense of adopting some definition. *Id.* at 1350; see *Star Scientific, Inc.* v. *R.J. Reynolds Tobacco Co.*,

537 F.3d 1357, 1371 (Fed. Cir. 2008) ("In and of itself, a reduction of the meaning of a claim term into words is not dispositive of whether the term is definite . . . ."). The Federal Circuit does not find a patent claim definite by simply citing an available construction and stopping the inquiry there.

The problem is simply that the phrase "not amenable to construction," when read in isolation, may erroneously focus a court or litigant on the mere ability to adopt a definition, rather than the clarity of the patent claim itself. For that reason, this Court should disapprove further use of that "not amenable to construction" shorthand.

Likewise, tribunals and litigants may be misled by the Federal Circuit's statement that only "insolubly ambiguous" claims fail the definiteness requirement. To be sure, that phrasing is accurate if "ambiguity" means uncertainty that exists from reading the patent claim alone, and the "solution" is consulting the sources relevant to claim construction to discern the claim's clear meaning to a skilled practitioner. That is how the Federal Circuit first used the term. *Exxon Research & Eng'g Co.* v. *United States*, 265 F.3d 1371, 1375 (Fed. Cir. 2001) (stating that a patent claim's scope need not be clear "on [its] face," but that a claim is indefinite if claim construction yields no discernible meaning, such that the claim is "insolubly ambiguous"). In other words, the Federal Circuit spoke of tolerating "ambiguity" that exists only before a claim is read in context from the perspective of a person working in the field.

Nevertheless, the Federal Circuit's "insolubly ambiguous" phrasing can also be read to endorse

patent claims that are ambiguous even after claim construction, so long as a court picks among one of the equally reasonable alternatives. Ambiguity of that nature would indeed fail to fulfill the public-notice function of a patent claim, and it would wrongly focus on the definiteness of a court's chosen construction rather than the patent claim itself. So while the "insolubly ambiguous" shorthand is accurate in a sense, it too should be disapproved because of its potential to confuse.

C. The broadest form of petitioner's argument should also be rejected because a mere litigation dispute does not show invalidity.

There appears to be little disagreement between petitioner and respondent on those core definiteness principles. Specifically, both parties agree that the test is whether a skilled artisan can discern the scope of the patent claim. Pet. Br. 25; Br. in Opp. 25. Both parties agree that this is judged based on the patent claim as read in light of the rest of the specification, the patent's examination history, and the knowledge of a person of ordinary skill in the art. See Pet. 24; Br. in Opp. 28–29.[4]

---

[4] The parties appear to disagree about whether the record of a patent's *re*examination may be considered, at least where the patent's text did not change. Petitioner argues that a patent claim must be clear "on the date it is issued" (Pet. Br. 34), implying that reexamination history cannot be considered because it would subvert the public-notice function in the interim. Respondent argues (Br. in Opp. 28) that reexamination history may be considered and that it helps provide any needed detail here. This brief takes no position on that issue.

Petitioner's argument, however, may suggest that a patent claim is indefinite if its scope is one "'over which reasonable persons will disagree.'" Pet. Br. 37 (quoting and criticizing the Federal Circuit's statement in *Exxon Research*, 265 F.3d at 1375, that mere disagreement among reasonable persons does not show indefiniteness) (emphasis omitted). Two amici curiae supporting the certiorari petition also endorse that reasonable-person focus. Br. of Public Knowledge and Electronic Frontier Foundation 11 (Oct. 23, 2013).

That strongest form of petitioner's argument should be rejected. Fatal ambiguity is not shown simply by disagreement among reasonable parties or jurists. The test focuses on the reasonableness of claim constructions themselves, not the persons proposing them. Reasonable parties and jurists may well disagree about a conclusion that is sufficiently clear in the ultimate analysis.

That principle is recognized in numerous contexts, not just patent law. For example, in criminal law—where the stakes are personal liberty—this Court recognizes that judicial or party disagreement on a criminal prohibition's scope does not itself show ambiguity triggering the rule of lenity. *E.g.*, *Bates* v. *United States*, 522 U.S. 23, 29, 32–33 (1997) (refusing to apply the rule of lenity to interpret a statute in a criminal defendant's favor, even though the district court and a circuit court had read it that way, because that reading was not consistent with the statutory text, structure, and history); *United States* v. *Rodgers*, 466 U.S. 475, 484 (1984) (same posture and result).

The same principle applies in contract interpretation: the mere fact that sophisticated litigants can build disagreements about the meaning of terms does not create or confirm ambiguities. *E.g.*, *Pocahontas Mineral Ltd. Liab. Co.* v. *CNX Gas Co.*, 666 S.E.2d 527, 531 (Va. 2008) ("The mere fact that the parties disagree about the meaning of the contract's terms is not evidence that the contract language is ambiguous."); *Seagull Energy E&P, Inc.* v. *Eland Energy, Inc.*, 207 S.W.3d 342, 345 (Tex. 2006) ("a contract is not ambiguous merely because the parties disagree on meaning"); *E.I. du Pont de Nemours & Co.* v. *Allstate Ins. Co.*, 693 A.2d 1059, 1061 (Del. 1997) ("Contract [language] is not ambiguous simply because the parties disagree on its meaning.").

Indeed, in *Markman* v. *Westview Instruments, Inc.*, 517 U.S. 370 (1996), this Court recognized "two elements of a simple patent case," with the first being "construing the patent." *Id.* at 384. The Court thus understood that most patent litigation "necessitates a determination of what the words in the claim mean." *Id.* at 374 (internal quotation marks omitted).

Litigating parties often disagree about the meaning of claim terms, as in *Markman* itself. *Id.* at 374–375. It may take serious study for a lay attorney or jurist to understand the knowledge of a practitioner in a field of technology and how that knowledge, along with the patent's teachings, shapes a proper reading of a patent claim. Even if that analysis yields one ultimately correct view, it is not always perfectly performed. So reasonable parties and jurists may differ on a claim's construction. See,

e.g., *Merrill* v. *Yeomans*, 94 U.S. 568, 574 (1876) (interpreting a claim to a manufacture of oils as a claim to a manufacturing process, notwithstanding the dissenting view of Justice Clifford reading the claim as covering the oil product itself).

It cannot be the case that every claim-construction dispute between "reasonable parties"—if that means something like litigants acting in good faith—shows that the patent claim is fatally ambiguous. Were a disagreement among reasonable persons enough to invalidate a patent claim as indefinite, there would be few patents remaining. The Federal Circuit "engage[s] in claim construction every day, and cases frequently present close questions of claim construction on which expert witnesses, trial courts, and even the judges of [that] court may disagree." *Exxon Research*, 265 F.3d at 1375. It would be odd indeed if construing a patent claim, which this Court in *Markman* understood as the first step in most patent litigation, in fact almost never occurred because the very fact of a dispute invalidated the claim.

In short, competing constructions of claim scope do not show ambiguity merely because they are advanced by "reasonable parties." To show that the claim does not have an established meaning, the constructions proposed by each party must be equally valid under the claim's phrasing and in conflict. The dispute cannot just be a wording issue proposed by the parties; to show indefiniteness, each proposal must be equally reasonable to a person of ordinary skill in the art in light of the entire patent specification and its prosecution history.

II. The "Spaced Relationship" Claim Term Is Structural And Distinct From The Claim's Functional Terms.

The patent claim here has both structural language and functional language. The "spaced relationship" claim term is structural; it does not itself require the performance of any function. That widely-used term conveys clear meaning in the context of the claim and specification and is not indefinite on its face.

The claim also includes separate language reciting functions that the claimed device performs. The definiteness of such functional language is judged by the clarity to a skilled artisan of the testing required to determine whether a given device falls within the patent claim. In assessing that clarity, courts may be aided by expert testimony establishing the perspective of skilled practitioners in the art, and there is no basis for a bright-line rule excluding expert evidence for functional claims. Indeed, given that claims are to be construed in light of the views of a person of skill in that art, expert evidence for claim interpretation is often needed by our generalist courts and is a staple of *Markman* claim analysis, especially for functional claim limitations.

A. Structural limitations like the "spaced relationship" term are different from functional terms.

The Federal Circuit panel majority treated the claim term "spaced relationship" as requiring the achievement of a certain function. Pet. App. 17a, 20a. Judge Schall disagreed, noting that the claim's

functional language is separate. Pet. App. 31a–33a. Judge Schall is correct.

1. The patent's first claim contains all the limitations relevant here. It is to a device for use as a heart-rate monitor like the sort mounted on exercise equipment; it works when a user's hands contact electrodes. U.S. Patent No. 5,337,753 ("Patent-in-Suit") col. 5 ll. 1–57. The electrodes detect electrical impulses that are conducted over the skin and correspond to the heart's beating or the use of other muscles. *Id.*

The claimed device requires a bar ("an elongate member") that has two halves ("said elongate member comprising a first half and a second half") and a pair of electrodes mounted, spaced apart, on each half:

> a first live electrode and a first common electrode mounted on said first half *in spaced relationship* with each other;
>
> a second live electrode and a second common electrode mounted on said second half *in spaced relationship* with each other; . . . .

Id. col. 5 ll. 17–33 (emphases added). The claim then requires the "common" electrodes of the two halves to be wired together, and the two "live" electrodes to be wired into what is basically a subtraction circuit ("a difference amplifier"). *Id.* col. 5 ll. 20–40.

The patent's specification teaches that, when a user holds the invention's grip over its electrodes, useful signals will be detected by each live electrode and fed into the subtraction circuit. *Id.* cols. 12–13. Each hand's signal will be an overlay of electrical impulses from the heart's beating and from the use

of skeletal muscles. *See* Dist. Ct. Dkt. #24, at 97, 120 (technical background).

Because of the heart's position in the body, the heartbeat impulses will be equal in strength but opposite in polarity, or phase, at the hands. *Id.* at 124. So, when those signals are subtracted from each other, the heartbeat pattern will be amplified (subtracting a negative is addition). Patent-in-Suit col. 3 ll. 38–50. In contrast, the patent says that the other muscle impulses detected in each hand will be equal in strength but also equal in phase, so that subtracting one from the other will cancel out that unwanted part of the signal. *Id.*

After reciting the structure discussed above, the claim then recites certain functions achieved by use of that structure, namely:

> wherein [a user holds each grip over its electrodes];
>
> whereby [the two detected signals have skeletal-muscle impulses equal in strength and phase];
>
> so that [signal subtraction cancels out those muscle impulses to "substantially zero"];
>
> and whereby [the detected signals have heartbeat impulses equal in strength but opposite in phase];
>
> so that [signal subtraction adds those heartbeat impulses, making a "non-zero" heartbeat output].

Id. col. 5 l. 42 – col. 6 l. 7. Those five clauses are the functional terms of relevance here.[5]

2. The first important point about this claim is that its functional language is separate from its "spaced relationship" limitation, which simply states a requirement that the two electrodes of a half must be mounted in a certain way on the bar. The term "spaced relationship" refers to physical distance, not the achievement of a result. The parties themselves once seemed to agree on that point. Exh. 4 to Dist. Ct. Dkt. #19, at 25 (transcript of June 27, 2010 hearing, recording parties' agreement that the term means "a relationship according to a measured distance between two points").

Indeed, terms like "spaced relationship" are often used to capture just the sort of arrangement envisioned here: one where two things are spaced apart. See, *e.g.*, *John Mezzalingua Assocs., Inc.* v. *Int'l Trade Comm'n*, 437 Fed. App'x 886, 887 (Fed. Cir. 2010) (patent requiring a part in "radially spaced relationship" with a post); *Sun Coast Merch. Corp.* v. *CCL Prods. Enters., Inc.*, 179 Fed. App'x 6, 9 (Fed. Cir. 2006) (patent requiring a pair of flanges

---

[5] This brief assumes *arguendo* that the functional clauses at issue state a function of which the device must be capable and thus does not claim both an apparatus and the action of using it. Cf. *IPXL Holdings, L.L.C.* v. *Amazon.com, Inc.*, 430 F.3d 1377, 1384 (Fed. Cir. 2005). Similarly, this brief assumes *arguendo* that the claim's "whereby" and related clauses are restrictions on claim scope, not explanation of natural results of using the structurally-described device. Cf. *Tex. Instruments Inc.* v. *U.S. Int'l Trade Comm'n*, 988 F.2d 1165, 1172 (Fed. Cir. 1993).

"in parallel spaced relationship"); *Med. Device Techs., Inc.* v. *C.R. Bard, Inc.*, 7 Fed. App'x 945, 947 (Fed. Cir. 2001) (patent requiring handle of inner needle and outer needle in a predetermined "axially spaced relationship"); *Karsten Mfg. Corp.* v. *Cleveland Golf Co.*, 242 F.3d 1376, 1381 (Fed. Cir. 2001) (patent requiring a golf club's back surface in "rearwardly spaced relationship" with its front face); *Vehicular Techs. Corp.* v. *Titan Wheel Int'l, Inc.*, 212 F.3d 1377, 1379 (Fed. Cir. 2000) (patent requiring a driving means "in spaced relationship" to an output means); *Ferag AG* v. *Quipp, Inc.*, 45 F.3d 1562, 1564 n.* (Fed. Cir. 1995) (patent requiring several gripper clamps "in spaced relationship"); *Lemelson* v. *TRW, Inc.*, 760 F.2d 1254, 1269 (Fed. Cir. 1985) (patent requiring load-support means "in spaced relationship" to certain frame elements).

Separate claim terms, of course, may further limit the claimed invention by requiring that the electrode spacing and other aspects of the claimed invention (such as electrode width, thickness, orientation, and material) work together to achieve a certain function. That is how respondent views the claim's separate, functional terms. But treating the term "spaced relationship" as itself imposing a functional requirement would blend claim terms in a way that could call into question the definiteness of a host of issued patents, and the legitimate expectations of their owners. Keeping different terms different avoids that risk.

3. The "spaced relationship" term is not indefinite. When read in the context of the patent, it has a clear meaning. Specifically, so long as each grip's electrodes are spaced any distance apart,

staying within a hand's breadth, a device meets the "spaced relationship" limitation. *See* Patent-in-Suit col. 1 l. 67 – col. 2 l. 12 (requiring that a hand contact both electrodes of a grip, thus providing an outer limit, and requiring that a signal be detected "between" them, meaning that they must be electrically distinct and thus providing an inner limit); Pet. App. 16a (Federal Circuit explanation of that point). The meaning of the relationship intended to be captured is clear.

This limitation of the patent claim is not like a property deed recording a boundary line "in a spaced relationship" with a highway, as some amici have suggested. In light of the patent's teachings, a better analogy would be a deed placing an inner boundary a hair's breadth past a highway's edge, so the two are not touching, and an outer boundary a hand's width away from the highway's edge (with several ways to nullify that deed if it covers land to which the owner has no entitlement). The deed's scope would be clear. Cf. *Minerals Separation, Ltd.* v. *Hyde*, 242 U.S. 261, 270 (1916) (explaining that "the certainty which the law requires in patents is not greater than is reasonable, having regard to their subject matter").

Nor are terms like "spaced relationship" indefinite because they cover a range of spacings. A claim to a fishing pole, for example, would not be indefinite because it required the pole to be "at least three feet long." That claim would be broad, of course, and its breadth may make it invalid on other grounds, such as lacking patentable novelty or covering inoperable embodiments. See *Exxon Research*, 265 F.3d at 1382. But even if that claim's

scope would be broad, its limits would be clear, as are the limits of the "spaced relationship" term here.

B. A bright-line test for judging the definiteness of functional terms is unsound and would upset settled expectations.

The definiteness of functional claim terms is judged by the same standard as for other claim terms: whether they define a reasonably clear scope, viewed from the perspective of a person of ordinary skill in the art. Petitioner has suggested a new, bright-line test for functional claim terms that would ignore the knowledge common in an art, if that knowledge is not recited in the patent specification itself. That test would upset settled expectations and should not be endorsed.

1. Functional limitations define claim scope by stating what something or someone must achieve, rather than naming things or acts in direct physical terms. As this Court has recognized, functional claiming can be an appropriate and useful way of describing an invention. *General Electric Co.* v. *Wabash Appliance Corp.*, 304 U.S. 364, 371 (1938) ("A limited use of terms of effect or result, which accurately define the essential qualities of a product to one skilled in the art, may in some instances be permissible and even desirable . . . .").

For example, when claiming a particular wheelchair design made to fit through a car door, functional language may capture the inventive concept while allowing for variation in the design necessary for cars of different sizes. *E.g.*, *Orthokinetics, Inc.* v. *Safety Travel Chairs, Inc.*, 806 F.2d 1565, 1568, 1575–1576 (Fed. Cir. 1986) ("The

phrase ['so dimensioned as to be insertable through' a door-to-seat space] is as accurate as the subject matter permits, automobiles being of various sizes."). The key is that "those of ordinary skill in the art realized that the dimensions could be easily obtained." *Id.* at 1576.

Likewise, when claiming a new treatment of ores where the "composition of ores varies infinitely, each one presenting its special problem," it may be "impossible to specify in a patent the precise treatment which would be most successful and economical in each case." *Minerals Separation*, 242 U.S. at 270. In such a patent, a claim may be described in a way that requires some testing to determine the process claimed for a particular ore. *Id.* There is nothing inherently suspect about claim limitations defined in terms of a function achieved.

Function-based limitations are of practical necessity in certain contexts. They are common, for example, in the chemical arts. See, *e.g.*, *E.I. du Pont de Nemours & Co.* v. *Phillips Petrol. Co.*, 849 F.2d 1430, 1435 (Fed. Cir. 1988) ("particularly with polymers, structure alone may be inadequate to define the invention, making it appropriate to define the invention in part by property limitations"); *In re Swinehart*, 439 F.2d 210, 212 (C.C.P.A. 1971) (in a chemical-composition case, noting "the practical necessity for the use of functional language" in some contexts).

Likewise, functional limitations are frequently used in describing biotechnology inventions. Tom Brody, *Functional Elements Can Ensure Allowance of Genus Claims*, 90 J. Pat. & Trademark Off. Soc'y 621, 621 (2008) ("Functional elements are present in

most biotechnology genus claims, for example, claims to nucleic acid sequences, polypeptide sequences, antibodies, and to transgenic plants and animals."); Lorance L. Greenlee, *Biotechnology Patent Law*, 68 Denv. U. L. Rev. 127, 130 (1991) ("The crucial distinguishing features are functional: how the compounds behave in biological systems, or how the compounds affect the behavior of biological systems themselves.").

Hence, "A patent applicant is free to recite features of an apparatus either structurally or functionally." *In re Schreiber*, 128 F.3d 1473, 1478 (Fed. Cir. 1997); *In re Swinehart*, 439 F.2d at 213 ("We have also found no prior decision of this or any other court which may be said to hold that there is some other ground for objecting to a claim on the basis of any language, 'functional' or otherwise, beyond what is already sanctioned [in 35 U.S.C. § 112].").

Functional claims, as with other types of claims, can present a risk of ambiguity. Determining whether a given thing or process is within the scope of a functionally-defined claim may require determining whether certain test conditions are met or a property is inherent. That can require testing a given structure to assess its functionality, so the required testing and outcome must be clear. If not, the functional limitation would make the claim's scope malleable, to potential ill effect. It could allow a patent owner to assert a broader claim scope than actually invented. Or it could prompt other inventors to steer too far around the claim, as by deterring competition broadly while allowing later assertion of

a narrower meaning without changing claim text and thus creating certain defenses to infringement.[6]

But those vices can all be guarded against by application of the standard definiteness requirement. See *Exxon Research*, 265 F.3d at 1375, 1379 (ruling that the detail in the patent specification made the claim's scope clear to a skilled practitioner); *W.L. Gore & Assocs., Inc.* v. *Garlock, Inc.*, 721 F.2d 1540, 1557 (Fed. Cir. 1983) (holding a claim term definite because "the specification itself disclosed how to compute matrix tensile strength"). If a skilled artisan would clearly understand the testing protocol and result required to determine whether a structure falls within the claim's scope, there is no reason to reject a functional claim as indefinite.

2. Petitioner may suggest a new rule for judging the definiteness of functional claims: when testing is required to apply a functional limitation, the patent specification itself must discuss or cite that testing. Pet. Br. 14, 50; Pet. 15-16. Such a bright-line rule should be rejected. Because a patent is written for

---

[6] See *Bloom Eng'g Co.* v. *N. Am. Mfg. Co.*, 129 F.3d 1247, 1249 (Fed. Cir. 1997) (explaining that 35 U.S.C. §§ 252 and 307 "shield those who deem an adversely held patent to be invalid; if the patentee later cures the infirmity by reissue or reexamination, the making of substantive changes in the claims is treated as an irrebuttable presumption that the original claims were materially flawed."); cf. *Marine Polymer Techs., Inc.* v. *HemCon, Inc.*, 672 F.3d 1350, 1362 (Fed. Cir. 2012) (en banc) (holding that an intervening-rights defense is not available where the patentee made arguments on reexamination alleged to narrow the claims and protect them from invalidity, if the claim text was not itself changed).

and is viewed from the perspective of persons of ordinary skill in the relevant technical field, expert testimony about custom, usage, and knowledge in that field is a long-accepted guide to understanding a claim's scope. See, *e.g.*, *Markman*, 517 U.S. at 387 (citing a patent treatise from 1895 noting that courts deciding matters of claim construction may be "aided by expert testimony").

There is no sound basis for accepting such expert testimony as to structural claim limitations but banning it as to functional limitations. One type is not inherently more complex than another. The testing required by a functional limitation may be as simple as determining whether a binary condition is true or false. Hence, even if a patent specification does not mention or cite a specific test, it may be readily apparent to persons of ordinary skill. Cf. *In re Wands*, 858 F.2d 731, 737 (Fed. Cir. 1988) (noting that different fields of art involve different levels of complexity and predictability).

Accordingly, a bright-line rule requiring a patent to name or cite specific testing for every functional limitation is not based on principle and would go way too far. Indeed, such a rule could potentially invalidate multitudes of patents, upsetting the settled expectations of inventors who described their inventions without notice of that proposed rule. Cf. *Festo Corp.* v. *Shoketsu Kinzoku Kogyo Kabushiki Co.*, 535 U.S. 722, 739 (2002) ("[C]ourts must be cautious before adopting changes that disrupt the settled expectations of the inventing community. . . . Fundamental alterations in these rules risks destroying the legitimate expectations of inventors in their property.").

Rather than categorically rejecting expert opinions explaining the knowledge of practitioners in a field, courts should continue policing those expert opinions for reliability based on such traditional factors as whether the expert's reasoning draws principled distinctions, whether the opinion is corroborated by published sources, and whether the expert's opinion speaks to the ultimate issue of a patent claim's clarity. *E.g.*, *Datamize*, 417 F.3d at 1354 (finding an expert declaration unpersuasive on claim definiteness, as it "fails to explain how the parameters should be evaluated or weighed to reach the conclusion" of interest); *Halliburton Energy Servs., Inc.* v. *M-I LLC*, 514 F.3d 1244, 1254 (Fed. Cir. 2008) ("The fact that an artisan would know how to perform these measurements and tests, however, says nothing about whether the artisan would also know which fluids were 'fragile gels' . . . ."); see also *Graver Tank & Mfg. Co.* v. *Linde Air Prods. Co.*, 339 U.S. 605, 611 (1950) (in the context of an infringement analysis, noting that evaluation of expert testimony is "the function of the trial court," which can be "enlightened by scientific demonstrations" and other methods of evaluation). That competence in assessing expert opinions should be used, rather than ignored by a bright-line rule oddly limited to functional claim terms.

This brief takes no position on the definiteness of the specific functional terms here, as it is not clear that either the district court or the court of appeals analyzed them other than through the lens of the

"spaced relationship" term. Pet. App. 19a–20a, 88a, 94a.[7]

CONCLUSION

For the foregoing reasons, this Court should reject the Federal Circuit's shorthand of "insolubly ambiguous" for identifying claims that fail to particularly point out and distinctly claim what the inventor regards as his invention. The Federal Circuit phraseology discussed above can create confusion. But petitioner's broadest argument is problematic as well.

The judgment of the court of appeals should be vacated and the case remanded for reconsideration under the established rule that the definiteness of a patent claim is judged through the eyes of a person of skill in the art, taking into account the claim language, the specification, and the prosecution history.

---

[7] This brief also takes no position on whether the expert-opinion disputes here have a factual nature, such that they should be decided by the district court in the first instance. See *Markman*, 517 U.S. at 387 (characterizing claim construction as an "issue of mixed fact and law," in part because a court may be "aided by expert testimony"); *Graham*, 383 U.S. at 7 (noting that determining the knowledge of a practitioner in a technical field involves factual questions). The issue is not squarely presented here, see Pet. i, and may be better considered in a case recently decided by the en banc court of appeals, in a 6-4 divided ruling. *Lighting Ballast Control LLC* v. *Philips Elecs. N. Am. Corp.*, No. 2012-1014, 2014 WL 667499 (Fed. Cir. Feb. 21, 2014) (holding that claim construction is decided purely as a matter of law).

Respectfully submitted,

WAYNE P. SOBON
President
AMERICAN INTELLECTUAL PROPERTY LAW ASSOCIATION
241 18th Street South
Suite 700
Arlington, VA 22202
(703) 415-0780

J. CAMPBELL BARKER
Counsel of Record
CHRISTOPHER R. JOHNSON
YETTER COLEMAN LLP
909 Fannin Street
Suite 3600
Houston, TX 77010
cbarker@yettercoleman.com
(713) 632-8000

MARCH 3, 2014

AMICUS CURIAE BRIEF

RECORD AND BRIEFS

Supreme Court, U.S.
FILED
APR - 2 2014
OFFICE OF THE CLERK
SUPREME COURT, U.S.

No. 13-369

In the Supreme Court of the United States

NAUTILUS, INC.,

Petitioner,

v.

BIOSIG INSTRUMENTS, INC.,

Respondent.

ON WRIT OF CERTIORARI TO THE UNITED STATES COURT OF APPEALS FOR THE FEDERAL CIRCUIT

BRIEF OF BIOTECHNOLOGY INDUSTRY ORGANIZATION AS AMICUS CURIAE IN SUPPORT OF RESPONDENT

RICHARD P. BRESS
Counsel of Record
GABRIEL K. BELL
JENNIFER M. HALBLEIB
LATHAM & WATKINS LLP
555 11th Street, NW
Suite 1000
Washington, DC 20004
(202) 637-2200
richard.bress@lw.com

Counsel for Amicus Curiae

Library of Congress
Law Library

TABLE OF CONTENTS

Page

TABLE OF AUTHORITIES ii

INTEREST OF *AMICUS CURIAE* 1

STATEMENT 2

ARGUMENT 6

I. PETITIONER MISREPRESENTS THE FEDERAL CIRCUIT'S DEFINITENESS TEST AND SEEKS TO LITIGATE AN ISSUE NOT PROPERLY BEFORE THIS COURT 6

II. PETITIONER'S APPROACH RADICALLY DEPARTS FROM ESTABLISHED LAW AND PRACTICE 11

III. PETITIONER'S APPROACH WOULD DESTABILIZE THE PATENT SYSTEM 20

A. Petitioner's Approach Would Inject Substantial New Uncertainty Into The Patent System And Stifle Innovation 20

B. Petitioner's Approach Conflates The Distinct Roles Of The PTO And District Courts In The Patent System 25

C. Petitioner's Concerns About The "Zone Of Uncertainty" Are Misplaced 27

CONCLUSION 29

TABLE OF AUTHORITIES

Page(s)

CASES

Adarand Constructors, Inc. v. Mineta,
534 U.S. 103 (2001) 11

Athletic Alternatives, Inc. v. Prince Manufacturing, Inc.,
73 F.3d 1573 (Fed. Cir. 1996) 17

Autogiro Co. of America v. United States,
384 F.2d 391 (Ct. Cl. 1967) 13

Brew v. Nugent,
117 N.W. 813 (Wisc. 1908) 19

In re Caldwell,
319 F.2d 254 (C.C.P.A. 1963) 17

Daubert v. Merrell Dow Pharmaceuticals, Inc.,
509 U.S. 579 (1993) 16

Eibel Process Co. v. Minnesota & Ontario Paper Co.,
261 U.S. 45 (1923) 13

Enzo Biochem, Inc. v. Applera Corp.,
599 F.3d 1325 (Fed. Cir. 2010), *cert. denied*,
131 S. Ct. 3020 (2011) 25

Exxon Research & Engineering Co. v. United States,
265 F.3d 1371 (Fed. Cir. 2001) 8, 10, 26, 27

TABLE OF AUTHORITIES—Continued

Page(s)

Festo Corp. v. Shoketsu Kinzoku Kogyo Kabushiki Co.,
535 U.S. 722 (2002) ..... *passim*

Graver Tank & Manufacturing Co. v. Linde Air Products Co.,
339 U.S. 605 (1950) 14

Halliburton Energy Services, Inc. v. M-I LLC,
514 F.3d 1244 (Fed. Cir. 2008) 7, 8, 9

Hathaway v. Rancourt,
409 A.2d 209 (Me. 1979) 19

Hybritech Inc. v. Monoclonal Antibodies, Inc.,
802 F.2d 1367 (Fed. Cir. 1986) 24, 25

Invitrogen Corp. v. Biocrest Manufacturing, L.P.,
424 F.3d 1374 (Fed. Cir. 2005) 23

Lorillard v. Pons,
434 U.S. 575 (1978) 18

Markman v. Westview Instruments, Inc.,
517 U.S. 370 (1996) 4, 11, 13, 14

McClain v. Ortmayer,
141 U.S. 419 (1891) 14

Microsoft Corp. v. i4i Ltd. Partnership,
131 S. Ct. 2238 (2011) 15

TABLE OF AUTHORITIES—Continued

Page(s)

Mid-West Conveyor Co. v. Jervis B. Webb Co.,
92 F.3d 992 (10th Cir. 1996) 19

Minerals Separation, Ltd. v. Hyde,
242 U.S. 261 (1916) 4, 12, 13

Modine Manufacturing. Co. v. United States International Trade Commission,
75 F.3d 1545 (Fed. Cir.), *cert. denied*, 518 U.S. 1005 (1996) 17

Ex parte Miyazaki,
No. 2007-3300, 2008 WL 5105055 (B.P.A.I. Nov. 19, 2008) 25

North American Vaccine, Inc. v. American Cyanamid Co.,
7 F.3d 1571 (Fed. Cir. 1993) 17

Orthokinetics, Inc. v. Safety Travel Chairs, Inc.,
806 F.2d 1565 (Fed. Cir. 1986) 17

Samson-United Corp. v. Sears, Roebuck & Co.,
103 F.2d 312 (2d Cir. 1939) 18

Smith v. Snow,
294 U.S. 1 (1935) 14

TABLE OF AUTHORITIES—Continued

Page(s)

Teva Pharmaceuticals USA, Inc. v. Sandoz, Inc.,
723 F.3d 1363 (Fed. Cir. 2013),
cert. granted, 82 U.S.L.W. 3469
(U.S. Mar. 31, 2014) (No. 13-854) 23

United States Civil Service Commission v. National Association of Letter Carriers,
413 U.S. 548 (1973) 19

W.L. Gore & Associates, Inc. v. Garlock, Inc.,
721 F.2d 1540 (Fed. Cir. 1983), *cert. denied*,
469 U.S. 851 (1984) 17

Winans v. Denmead,
56 U.S. (15 How.) 330 (1854) 14

STATUTES AND REGULATIONS

35 U.S.C. § 111 2

35 U.S.C. § 112 (2001) 2

35 U.S.C. § 282(a) 5, 15

Bryson Act, Pub. L. No. 82-593, 66 Stat. 792
(1952) 18

Leahy-Smith America Invents Act, Pub. L. No.
112-29, 125 Stat. 284 (2011) 2, 18

TABLE OF AUTHORITIES—Continued

Page(s)

76 Fed. Reg. 7162 (Feb. 9, 2011).....24, 25

OTHER AUTHORITIES

David E. Adelman & Kathryn L. DeAngelis, *Patent Metrics: The Mismeasure of Innovation in the Biotech Patent Debate*, 85 Tex. L. Rev. 1677 (2007).....27

The Federalist No. 62 (James Madison) 21

FTC, *Emerging Health Care Issues: Follow-up Biologic Drug Competition* (2009).....22

Henry Grabowski et al., *The Market for Follow-On Biologics: How Will It Evolve?*, 25 Health Affairs 1291 (2006) 22

Adam B. Jaffe, *The U.S. Patent System in Transition: Policy Innovation and the Innovation Process*, 29 Research Policy 531 (2000).....27

Pauline Newman, *The Federal Circuit: A Reminiscence*, 14 Geo. Mason U. L. Rev. 513 (1992).....21

President's Council of Advisors on Science and Technology, *Priorities for Personalized Medicine* (Sept. 2008) 22

TABLE OF AUTHORITIES—Continued

Page(s)

PTO, *Manual of Patent Examining Procedure* § 2173.02(I) (8th ed. Rev. 9, Aug. 2012).....25, 26

John P. Walsh et al., *Patents, Material Transfers and Access to Research Inputs in Biomedical Research* (Sept. 20, 2005).....27

INTEREST OF *AMICUS CURIAE*

The Biotechnology Industry Organization (BIO) is the country's largest biotechnology trade organization, representing over 1100 companies, academic institutions, and biotechnology centers in all 50 States and countries around the world.[1] BIO members undertake research and development of biotechnological healthcare, agricultural, environmental, and industrial products. While some of BIO's corporate members are Fortune 500 companies, 90% of its members are small or mid-size businesses, with annual revenues of less than $25 million. All of BIO's members share a strong commitment to the stability of the Nation's patent system and, indeed, for most members the reliability and durability of patents is vital to their ability to raise the investment capital that funds their research and product development efforts. The question presented in this case is of great importance to BIO's members because acceptance of petitioner's radical view of the Patent Act's definiteness requirement would upset "the delicate balance that the law attempts to maintain between inventors, who rely on the promise of the law to bring the invention forth, and the public, which should be encouraged to pursue innovations, creations, and new ideas beyond the inventor's exclusive rights." *Festo*

---

[1] No counsel for a party authored this brief in whole or in part, and no such counsel or party made a monetary contribution intended to fund the preparation or submission of this brief. No person other than *amicus curiae*, or its counsel, made a monetary contribution intended to fund its preparation or submission. The parties filed blanket letters of consent for *amicus* briefs.

Corp. v. Shoketsu Kinzoku Kogyo Kabushiki Co., 535 U.S. 722, 731 (2002).

STATEMENT

Under the Patent Act, each patent application must include "a specification as prescribed by Section 112." 35 U.S.C. § 111.[2] The specification must "contain a written description of the invention, and of the manner and process of making and using it, in such full, clear, concise, and exact terms as to enable any person skilled in the art" to make and use it. 35 U.S.C. § 112, ¶ 1. And the specification must "conclude with one or more claims particularly pointing out and distinctly claiming the subject matter which the applicant regards as his invention." 35 U.S.C. § 112, ¶ 2. The latter is known as the definiteness requirement.

The patent challenged by petitioner Nautilus, Inc., is directed to a heart rate monitor in the handles of exercise equipment, such as treadmills or stationary bikes. Pet. App. 4a; U.S. Patent No. 5,337,753.[3] The apparatus is designed to allow more accurate detection of the user's heart rate by eliminating signals given off by other muscles. Pet. App. 4a. To do that, the claim provides that, in each handle, there are two electrodes that are in a "'spaced relationship with each other.'" Pet. App. 7a (quoting claim). The district court held

---

[2] Statutory citations are to the version in effect prior to the Leahy-Smith America Invents Act, Pub. L. No. 112-29, §4(c), 125 Stat. 284, 296 (2011).

[3] Although some *amici* focus on issues relating to patent-assertion entities, *see, e.g.*, EFF Br. 14-16; Microsoft Br. 29-31, this action is a routine matter involving established competitors.

that the "spaced relationship" term is indefinite under § 112, ¶ 2 because it "did not tell [the court] or anyone what precisely the space should be" or "even any parameters as to what the space should be." Pet. App. 72a. The Federal Circuit reversed, holding that the patent's "claim language, specification, and the figures illustrating the 'spaced relationship' ... provide sufficient clarity to skilled artisans as to the bounds of this disputed term." Pet. App. 16a. The court explained that the patent "discloses certain inherent parameters of the claimed apparatus" because the electrodes cannot be further apart than the width of a person's hand and cannot be so close as to be touching each other. *Id.* Also, the court held, a skilled artisan could "readily ascertain the bounds of the 'spaced relationship' through tests using standard equipment" by determining the spacing necessary to remove the unwanted (noise) signals. Pet. App. 25a.

Petitioner now argues that claims containing the term "spaced relationship" are invalid as indefinite under § 112, ¶ 2 because that term could conceivably have more than one reasonable interpretation, even if one interpretation is more plausible than the other. This Court should reject petitioner's position for three fundamental reasons

First, petitioner misrepresents the Federal Circuit's test and its holding. Petitioner focuses heavily on certain language from the opinion—"insolubly ambiguous"—painting it as an extra-statutory standard that the Federal Circuit has erroneously grafted onto the Patent Act. But it is nothing of the sort. A careful reading of the court's decisions shows that "insolubly ambiguous" is merely a label that the court uses when it concludes for any of

a number of reasons that a skilled artisan could not discern the scope of the claims (*i.e.*, the claims are indefinite) even after using all of the ordinary tools of claim construction to determine what the claims meant to a skilled artisan at the time they were filed.

The more specific issue petitioner seeks to litigate is not properly before the Court. The thrust of petitioner's position is that the Federal Circuit wrongly found the claims definite even though they could be reasonably interpreted in multiple ways. But petitioner did not make that argument to the panel, and the panel never held that there are multiple reasonable interpretations in this case—it simply determined what, in its view, is the *correct* interpretation. Thus, petitioner now asks this Court to decide this case based on an issue that was not pressed or passed on below. This Court could consider dismissing the writ as improvidently granted.

Second, on the merits, petitioner's approach is contrary to well-established law. This Court has long recognized that absolute clarity is not always possible, and thus not always required, in drafting claims. *See, e.g.*, *Markman v. Westview Instruments, Inc.*, 517 U.S. 370, 389-90 (1996); *Minerals Separation, Ltd. v. Hyde*, 242 U.S. 261, 271 (1916). Indeed, when endorsing the doctrine of equivalents, this Court expressly rejected the notion, urged here by petitioner, that absolute certainty is required to give adequate notice. *Festo*, 535 U.S. at 732. The Court expressly acknowledged that a certain amount of "uncertainty" is "the price of ensuring the appropriate incentives for innovation." *Id.* Petitioner's contrary approach ignores these controlling precedents. It is, moreover, fundamentally at odds with how courts routinely interpret other

written documents—such as statutes, contracts, and deeds—that often require at least as much clarity as patent claims.

Petitioner's approach is also incompatible with the statutory presumption of validity afforded to issued claims. *See* 35 U.S.C. § 282(a). Requiring a court to declare a claim invalid whenever it is faced with a disagreement between competing experts would flip the presumption and place a heavy, nearly dispositive, thumb on the scale in favor of invalidity. Indeed, under petitioner's view, any disagreement among judges as to the construction of a term would strongly suggest the term is indefinite, and thus invalid. Among other things, acceptance of that view would make it almost impossible for a patentee to challenge an adverse claim construction on appeal: Alleged infringers would doubtlessly insist that the claim must either bear the meaning given it by the district court or be declared indefinite—creating a classic heads-I-win/tails-you-lose situation. That is not and has never been the law. To the contrary, the courts, including the Federal Circuit, have long interpreted claims by resolving any ambiguity in favor of the most reasonable interpretation, even if other interpretations are arguably available. And, notably, Congress has repeatedly reenacted the definiteness provision in § 112 without disturbing that understanding. If petitioner wants a change, it should ask Congress, not this Court.

Third, petitioner's approach would upset the balance that Congress has struck to encourage innovation and would inject a damaging uncertainty into the patent system. Especially in leading-edge fields, such as biotechnology and pharmaceuticals, the

rewards of patent-protection are vital to encouraging and continuing innovation. Petitioner's expansive interpretation of the statutory definiteness requirement would make investment a speculative gamble, at best, in areas of technology where it is all but impossible to draft claims with absolute clarity—particularly in the biotechnology field, where innovations often must be described in terms of degree and ranges, rather than precise amounts.

Petitioner suggests that its approach must be workable because the patent office currently uses it when it is examining applications in the first place. But that argument conflates the distinct roles of the patent office (which construes the claims broadly and, in the to and fro of examination, rightly presses applicants to remove ambiguity) and the district courts (which construe issued claims in light of the statutory presumption of validity, based on the completed prosecution history and other intrinsic evidence). By ignoring those differences, petitioner would further unsettle the patent system.

This Court should reject petitioner's position and affirm the Federal Circuit's judgment.

ARGUMENT

I. PETITIONER MISREPRESENTS THE FEDERAL CIRCUIT'S DEFINITENESS TEST AND SEEKS TO LITIGATE AN ISSUE NOT PROPERLY BEFORE THIS COURT

Petitioner's position, echoed by some of its *amici*, is flawed from the outset because it describes and then attacks a caricature of the Federal Circuit's indefiniteness test. Even more troubling, it misrepresents the Federal Circuit's holding and asks

this Court to resolve this case on a ground not pressed or passed upon below. This Court should consider dismissing the writ as improvidently granted.

1. In order to paint the court of appeals in the least favorable light, petitioner and its *amici* repeatedly criticize the Federal Circuit's "'insolubly ambiguous' test" as if it were a novel and freestanding mode of analysis. Pet. Br. 37-39; *see also, e.g., id.* at 4-5, 21, 46-47; EFF Br. 6-8; Microsoft Br. 24. It is not a freestanding mode of analysis. Instead, it is merely a label that the court uses for its *conclusion* when the court finds, after applying the traditional tools for claim construction (including examining the claim language, specification, and prosecution history) that a claim still "fails to provide sufficient clarity delineating the bounds of the claim to one skilled in the art." Pet. App. 15a.

The Federal Circuit has used this label to summarize the broad range of circumstances in which a claim may be found indefinite, such as when a claim (i) "recites means-plus-function elements without disclosing corresponding structure in the specification," (ii) "includes a numeric limitation without disclosing which of multiple methods of measuring that number should be used," (iii) "contains a term that is 'completely dependent on a person's subjective opinion,'" or (iv) "does not have proper antecedent basis where such basis is not otherwise present by implication or the meaning is not reasonably ascertainable." *Halliburton Energy Servs., Inc. v. M-I LLC*, 514 F.3d 1244, 1249 (Fed. Cir. 2008) (citations omitted). The court has explained that "[t]he common thread in all of these cases is that claims were held indefinite only where *a person of ordinary skill in the art could not determine the*

bounds of the claims, i.e., the claims were insolubly ambiguous." *Id.* (emphasis added). In other words, "insolubly ambiguous" is merely shorthand for the statutory standard, not a departure from it. The Acting Solicitor General recognized as much in a prior case, advising this Court that the Federal Circuit has primarily used the term "insolubly ambiguous" not as a standard with independent significance but instead "to express principles that are well grounded in this Court's Section 112 jurisprudence." Br. for the U.S. as *Amicus Curiae* 13, *Applera Corp. v. Enzo Biochem, Inc.*, No. 10-426, 2011 WL 1881824 (filed May 17, 2011) ("U.S. *Applera* Br."); *see also, e.g.*, ABA Br. 16 ("'[I]nsolubly ambiguous' is not an expression of a rigid rule, as some have argued, but rather a shorthand ....").

2. Petitioner also insists that the Federal Circuit's analysis ignores claims' core notice function, because "a test that upholds claims so long as a construction *adopted years later* by a court is not 'insolubly ambiguous' fails to require clear public notice of the claim's scope when the patent is issued." Pet. Br. 38 (emphasis added). Here, again, petitioner misrepresents the Federal Circuit's approach.

The Federal Circuit recognizes that claims need not "be plain on their face in order to avoid condemnation for indefiniteness" because, otherwise, "all but the clearest claim construction issues could be regarded as giving rise to invalidating indefiniteness in the claims at issue." *Exxon Research & Eng'g Co. v. United States*, 265 F.3d 1371, 1375 (Fed. Cir. 2001). But the court does not treat the construction and potential indefiniteness of a term as a *post hoc* exercise. Instead, the court maintains its attention on what the claim meant *at the time it was filed.* The

court recognizes that, as long as a skilled artisan could "determine the bounds of the claims" at the time they were filed, the claims are not indefinite and the notice function is fully served. *Halliburton*, 514 F.3d at 1249. But at the same time "the scope of the claims [must] be sufficiently definite to inform the public of the bounds of the protected invention, i.e., what subject matter is covered by the exclusive rights of the patent," because "[o]therwise, competitors cannot avoid infringement, defeating the public notice function of patent claims." *Id.*

3. At bottom, the thrust of petitioner's argument is that the Federal Circuit is wrong to accept "ambiguous patent claims with multiple reasonable interpretations," as set forth in the first of the two questions presented. Pet. Br. i. That charge permeates petitioner's brief and drives its forceful rhetoric about the need for clarity under § 112. *See also, e.g.*, Pet. Br. 2, 3, 4, 16, 21, 22, 25, 34, 35, 36, 37, 38, 45, 46, 47, 48, 49. Although petitioner's criticism of the Federal Circuit is wrong on the merits (for reasons discussed below), the simple fact is *the issue is not properly presented in this case.*

The Federal Circuit did not hold in this case that the claims here were susceptible to more than one reasonable interpretation but nonetheless sufficiently definite. To the contrary, the court concluded that "skilled artisans *can readily ascertain* the bounds of the 'spaced relationship.'" Pet. App. 25a (emphasis added). As the court explained, the specification disclosed certain "inherent parameters" such that the electrodes could not be more than a hands-width apart and could not be so close as to effectively merge the two signal detection points. Pet. App. 16a, 20a. The court, moreover, determined that the ability of the

claimed heart rate monitor to remove unwanted signals—which is described in additional claim language (a "whereby" clause) and the specification and which "provided the basis for overcoming the PTO's office action rejections"—further clarifies the meaning of "spaced relationship." Pet. App. 16a. And the court concluded that "a skilled artisan could apply a test" using "standard equipment" to determine the spaced relationship necessary to remove the unwanted signals. Pet. App. 20a, 25a. Thus, unlike the district court (and petitioner), the Federal Circuit read the "spaced relationship" language in the full context of the claim language, specification and prosecution history. Pet. App. 16a; *cf.*, *e.g.*, Nautilus CAFC Br. 42 (rejecting reliance on "whereby" clause); Pet. App. 93a-94a.

The Federal Circuit did not consider whether the "spaced relationship" term was susceptible to multiple reasonable interpretations for good reason: petitioner never pressed that argument. Instead, petitioner presented a laundry list of reasons why the claim term was purportedly not susceptible to *any* reasonable interpretation. *See* Nautilus CAFC Br. at 41-58. The court, reading the term in light of all the intrinsic evidence, disagreed with petitioner and held that the term did have a discernable meaning. It did not choose from two proffered reasonable interpretations as petitioner now implies. Had petitioner raised its present argument, the court could have addressed it expressly. And if the court believed there was such ambiguity (which it did not), it might have selected the narrower of the two to preserve the claims' validity. *See, e.g.*, *Exxon Research & Eng'g*, 265 F.3d at 1375. But petitioner did not make any such argument.

Thus, petitioner puts this Court in the undesirable position of "'decid[ing] in the first instance issues not decided below.'" *Adarand Constructors, Inc. v. Mineta*, 534 U.S. 103, 109, 111 (2001) (citation omitted) (dismissing writ of certiorari as improvidently granted). For that reason, *amicus* respectfully suggests, it would be appropriate for the Court to dismiss the writ of certiorari as improvidently granted. *See id.*

II. PETITIONER'S APPROACH RADICALLY DEPARTS FROM ESTABLISHED LAW AND PRACTICE

Petitioner and its *amici* primarily argue that claims are indefinite any time skilled artisans could reasonably disagree over their meaning. Advancing an even more aggressive form of that argument, some of petitioner's *amici* suggest that the claim language *itself* must be "clear and unambiguous." EFF Br. 21; *see also* Microsoft Br. 2. That is not the law. This Court has expressly recognized that claim language should not be interpreted in isolation, but must instead be construed in context, in light of the specification and prosecution history. *See Markman*, 517 U.S. at 389-90; *Festo*, 535 U.S. at 733. As the Court has explained, this is a "necessarily sophisticated analysis of the whole document, required by the standard construction rule that a term can be defined only in a way that comports with the instrument as a whole." *Markman*, 517 U.S. at 389. The view that a court must throw its hands up and declare invalidity whenever claim construction requires that sort of sophisticated analysis—whenever it requires hard work—ignores decades of practice and this Court's specific instruction to the contrary.

Petitioner ultimately concedes this. Petitioner acknowledges that claims are not read in isolation, and must instead be construed in the context of the specification and other intrinsic evidence, using all relevant "interpretive tools." Pet. Br. 35-36. Petitioner nonetheless argues that a claim is invalid if, after that interpretative process, it is still "susceptible of multiple reasonable interpretations to one skilled in the relevant art." Pet. Br. 22. According to petitioner, for claims to survive § 112, ¶ 2, a "skilled artisan must be able to conclude that no other reasonable readings exist" lest the claims fail to give sufficient notice of the scope of the invention. Pet. Br. 46-47. That proposed standard would mark a departure from established law in at least four respects.

1. Petitioner's approach is inconsistent with this Court's case law on indefiniteness, which has never required absolute certainty. For example, the Court rejected an accused infringer's contention that a patented process was not claimed with sufficient precision because aspects of the process had to be varied, through experimentation, to achieve the best results for different substances. *Minerals Separation*, 242 U.S. at 271. The Court explained that a claim may "leav[e] something to the skill of persons applying the invention," as long as it is "sufficiently definite to guide those skilled in the art to its successful application." *Id.*[4] It made clear that "the certainty which the law requires in patents is not greater than is

---

[4] Such is the case here. As discussed, the "spaced relationship" is subject to the inherent hand-width limitations and must provide the functionality required by the "wherein" clause and the other intrinsic evidence.

reasonable, having regard to their subject-matter." *Id.* at 270. Similarly, this Court held that a patent for an improved paper-making machine was not indefinite because a skilled artisan would have "no difficulty ... determining what was the substantial pitch needed" for the machine to move fast enough to prevent ripples from forming in the stock of paper being made. *Eibel Process Co. v. Minnesota & Ontario Paper Co.*, 261 U.S. 45, 65-66 (1923). This Court emphasized that "[i]t was difficult for [the patentee] to be more definite, due to the varying conditions" of paper stock." *Id.* at 65.

And, more recently, this Court recognized that the "language in the patent claims may not capture every nuance of the invention or *describe with complete precision* the range of its novelty." *Festo*, 535 U.S. at 731 (emphasis added). "'Often the invention is novel and words do not exist to describe it,'" particularly in leading-edge fields and contexts. *Id.* (quoting *Autogiro Co. of Am. v. United States*, 384 F.2d 391, 397 (Ct. Cl. 1967)); *see also* U.S. *Applera* Br. 8 ("This Court has recognized ... that it is often impossible to reduce an invention ... to writing with faultless precision and clarity.").

In fact, this Court has specifically recognized that courts must sometimes decide which of two competing reasonable constructions is the correct one. In *Markman*, the Court explained that "there could be a case in which a simple credibility judgment would suffice to *choose* between experts whose testimony was *equally consistent with a patent's internal logic*." 517 U.S. at 389 (emphasis added). The Court did not suggest that such a claim is invalid. To the contrary, the Court understood that there might be two reasonable interpretations and that it is the courts' role to determine which of the two would be correct to

a skilled artisan. *See id.*; *see also Smith v. Snow*, 294 U.S. 1, 14 (1935) ("[I]f the claim were fairly susceptible of two constructions, that should be adopted which will secure to the patentee his actual invention, rather than to adopt a construction fatal to the grant." (citations omitted)); *McClain v. Ortmayer*, 141 U.S. 419, 425 (1891) ("[I]n a case of doubt, where the claim is fairly susceptible of two constructions, that one will be adopted which will preserve to the patentee his actual invention ...."). That is the law. The Court has never insisted on the pristine clarity that petitioner would require.

Petitioner's insistence that such pristine clarity is required for patents to serve their notice function also is defeated by this Court's holding that, under the doctrine of equivalents, patents may infringe even though the literal claim language is not satisfied. *See Festo*, 535 U.S. at 731-33 ("The scope of a patent is not limited to its literal terms but instead embraces all equivalents to the claims described."); *see also, e.g., Graver Tank & Mfg. Co. v. Linde Air Products Co.*, 339 U.S. 605, 607-09 (1950); *Winans v. Denmead*, 56 U.S. (15 How.) 330, 347 (1854). The Court has acknowledged that "[i]t is true that the doctrine of equivalents renders the scope of patents less certain," that "[i]t may be difficult to determine what is, or is not, an equivalent to a particular element of an invention," and that "[i]f competitors cannot be certain about a patent's extent, they may be deterred from engaging in legitimate manufactures outside its limits." *Festo*, 535 U.S. at 732. Nonetheless, this Court has repeatedly (and unanimously) rejected a "rule of literalism" and stressed that the "uncertainty" is "the price of ensuring the appropriate incentives for innovation." *Id.* Petitioner's assertion, insisting that

the notice function of patents requires providing perfect clarity of claim scope, ignores altogether the concomitant need to "ensur[e] the appropriate incentives for innovation" and, as such, is fundamentally inconsistent with this Court's balanced approach.

2. Petitioner's approach is also fundamentally inconsistent with the statutory presumption of validity afforded to issued patents. *See* 35 U.S.C. § 282(a) ("A patent shall be presumed valid."); *see also Microsoft Corp. v. i4i Ltd. P'ship*, 131 S. Ct. 2238, 2244-45 (2011). At a minimum, the statutory presumption of validity cannot tolerate an approach, like petitioner's, that places a heavy thumb on the scale in favor of *invalidity*. "Were a disagreement among reasonable persons enough to invalidate a patent claim as indefinite, there would be few patents remaining." AIPLA Br. 12; *see also* ABA Br. 5 ("[F]ew claims will be so clear that *no* uncertainty can be found in their interpretation."). Under petitioner's test, for example, a claim that would be interpreted the same definite way by 100% of skilled practitioners would nonetheless be indefinite if any of them believed that an alternative reading was reasonable.

This approach would render the resolution of claim construction disputes largely a thing of the past because, once two different interpretations of a claim limitation are proffered, inconsistent with each other but not unreasonable, the inquiry would end and the claim would be invalidated without any need for a definitive construction. That is not an unlikely scenario. Accused infringers would have every incentive to—and undoubtedly would—present "reasonable" alternatives in "nearly every case," thereby "frustrat[ing] the court's efforts to construe

the asserted claims." ABA Br. 19-20. Especially in technical fields, lay judges are likely to view each side's technical expert—a person skilled in the art—as "reasonable." *Cf. Daubert v. Merrell Dow Pharm., Inc.*, 509 U.S. 579, 600-01 (1993) (Rehnquist, C.J., concurring in part, dissenting in part) (cautioning that the Court should not require judges to become "amateur scientists" to perform their role). Faced with competing expert testimony many judges will be more prone to find a claim indefinite on that ground than to go through the difficult process for a layman of figuring out what one skilled in the art would have understood the claims to disclose when they were filed. That result is contrary to the process this Court required in *Markman*, which contemplates that claim construction is necessary, even when arduous.

Petitioner's approach would also severely handicap appellate review of any district court claim construction that has led to a non-infringement finding: An appellate court could disturb such a finding only by concluding that the district court's construction was not only wrong but *unreasonable*—because if the district court's construction was wrong but *reasonable* then the claim would be invalid as indefinite. Similarly, any time two judges on a panel disagreed about the construction of a patent term, the Federal Circuit would either have to invalidate the claim as indefinite or label a colleague unreasonable. Indeed, petitioner repeatedly argues that the claims in this case are invalid because the majority and concurrence viewed the claim language somewhat differently, even though each believed it reached the correct result. *See, e.g.*, Pet. Br. 22, 38, 48-49, 51-52. If the presumption of validity means anything, it must at least ensure that claims are not, in effect, presumed

*in*valid anytime two jurists disagree and that courts, at all levels use all of the traditional tools of construction before rejecting a duly issued patent as indefinite.

3. Petitioner's approach also is untenable because the Federal Circuit has consistently been construing claims to resolve ambiguity since its formation and, despite amending the Patent Act numerous times, Congress has never disturbed that understanding. For example, in *Orthokinetics, Inc. v. Safety Travel Chairs, Inc.*, the court held that the term "so dimensioned" was definite because it was "as accurate as the subject matter permits, automobiles being of various sizes." 806 F.2d 1565, 1576 (Fed. Cir. 1986). And, in *Modine Manufacturing. Co. v. United States International Trade Commission*, the court rejected an indefiniteness argument, holding that, "[w]hen claims are amenable to more than one construction," the claims should be construed narrowly to avoid invalidity. 75 F.3d 1545, 1557 (Fed. Cir.), *cert. denied*, 518 U.S. 1005 (1996); *see also, e.g., Athletic Alternatives, Inc. v. Prince Mfg., Inc.*, 73 F.3d 1573, 1581 (Fed. Cir. 1996) (construing narrowly to avoid invalidity); *N. Am. Vaccine, Inc. v. Am. Cyanamid Co.*, 7 F.3d 1571, 1579 (Fed. Cir. 1993) (finding claims sufficiently definite notwithstanding reasonable dispute over meaning); *W.L. Gore & Assocs., Inc. v. Garlock, Inc.*, 721 F.2d 1540, 1557 (Fed. Cir. 1983) (holding that claims are not indefinite merely because some experimentation is necessary to determine the claims' scope), *cert. denied*, 469 U.S. 851 (1984). And the Federal Circuit's predecessor and other courts have been doing the same since Congress added the definiteness requirement to the Patent Act in 1870. *See, e.g., In re Caldwell*, 319 F.2d 254, 255 (C.C.P.A.

1963) (upholding method claim for administering "an effective amount" of aspirin "for growth stimulation"); *Samson-United Corp. v. Sears, Roebuck & Co.*, 103 F.2d 312, 315 (2d Cir. 1939) ("[T]he patent claims should be construed, if possible, so as to preserve the substance of the patent.").

All the while, Congress has amended the Patent Act numerous times, including adding a new paragraph specifically to § 112 in 1952 and reorganizing § 112 in 2011, without taking any steps to overturn the Federal Circuit's understanding of the meaning of the definiteness requirement. *See* Leahy-Smith America Invents Act, Pub. L. No. 112-29, § 4(c), 125 Stat 284, 296 (2011); Bryson Act, Pub. L. No. 82-593, 66 Stat. 792 (1952). Despite ample opportunities to amend § 112's definiteness requirement, Congress has instead reenacted it, thereby ratifying the courts' well-established understanding. *See Lorillard v. Pons*, 434 U.S. 575, 580 (1978) ("Congress is presumed to be aware of an administrative or judicial interpretation of a statute and to adopt that interpretation when it re-enacts a statute without change."). This Court should not disturb what Congress has chosen to leave intact.

4. Finally, petitioner's approach is fundamentally inconsistent with how courts have interpreted other written instruments—such as statutes, contracts, and deeds—for hundreds of years. Although clarity is certainly necessary in those contexts as well (in some, perhaps even more so than for patent claims), the courts have not hesitated to resolve ambiguity when and as necessary to reach the correct interpretation.

It is well established, for example, that a statute or regulation may be susceptible to multiple reasonable interpretations without being unconstitutionally

vague. In *United States Civil Service Commission v. National Association of Letter Carriers*, this Court rejected precisely such a vagueness challenge, stressing that "there are limitations in the English language with respect to being both specific and manageably brief, and it seems to us that although the prohibitions may not satisfy those intent on finding fault at any cost, they are set out in terms that the ordinary person exercising ordinary common sense can sufficiently understand and comply with, without sacrifice to the public interest." 413 U.S. 548, 578-79 (1973).

Likewise, when contracts—including patent licensing agreements that determine the parties' intellectual property rights and risks—have multiple reasonable interpretations, courts routinely work to ascertain the correct meaning. *See, e.g., Mid-West Conveyor Co. v. Jervis B. Webb Co.*, 92 F.3d 992, 995-98 (10th Cir. 1996) (resolving ambiguity in patent licensing agreement that was "susceptible to more than one reasonable interpretation"). They do not discard ambiguous agreements out of hand.

The same is true for real estate deeds. One of petitioner's *amici* begins its brief with a cautionary tale of an unclear real estate deed and how a developer, unable to discern the western boundary, would be chilled from making productive use of the land. EFF Br. 2. But of course in that situation, a court would not void the deed—it would instead use all available interpretative tools to figure out the right answer. *See, e.g., Hathaway v. Rancourt*, 409 A.2d 209, 213 (Me. 1979) (resolving ambiguity in westerly boundary of land conveyed in a deed); *Brew v. Nugent*, 117 N.W. 813, 814 (Wisc. 1908) (holding that when original monuments delineating boundaries have

disappeared, "they must be established by the best evidence the nature of the situation is susceptible of"). Courts construing claim terms are equally capable of selecting the most reasonable (and thus correct) construction among multiple reasonable ones, even when the interpretative process is difficult.

III. PETITIONER'S APPROACH WOULD DESTABILIZE THE PATENT SYSTEM

A ruling for petitioner would mark a drastic change in the law that would dramatically alter the status quo and upset settled expectations. It would inject substantial new uncertainty into the patent system and thereby substantially diminish the patent-based incentives that have made the United States the world leader in fields like biotechnology and decrease funding for future research and development. This Court should reject petitioner's invitation to disrupt settled expectations and change the patent system in such a fundamental way, with profoundly harmful consequences.

A. Petitioner's Approach Would Inject Substantial New Uncertainty Into The Patent System And Stifle Innovation

Section 112 is one part of "the delicate balance the law attempts to maintain between inventors, who rely on the promise of the law to bring the invention forth, and the public, which should be encouraged to pursue innovations, creations, and new ideas beyond the inventor's exclusive rights." *Festo*, 535 U.S. at 731. Petitioner's approach would disrupt that delicate balance by imposing a heavy bias in favor of indefiniteness and shifting to the inventor the often virtually impossible burden of describing an invention

with absolute precision. That would discourage investment and innovation in at least two ways.

1. Petitioner's approach would upset settled interests and create new and harmful uncertainty. Patentees have been drafting patents with reasonable precision, not strict precision, for centuries, and adopting petitioner's "unreasonably stringent test for definiteness for issued patents ... would adversely change this Court's definiteness jurisprudence for all patents and patent owners." ABA Br. 4. Investment-backed reliance interests in existing patents and trust in the patent system counsel strongly against adopting petitioner's new approach. It is well-recognized that "the degree of legal certainty, as to patentability and enforceability, is a significant factor in innovation decisions." Pauline Newman, *The Federal Circuit: A Reminiscence*, 14 Geo. Mason U. L. Rev. 513, 515 (1992); *see also id.* ("The patent grant particularly aids new businesses, for it supports entry of new products against established competitors, and facilitates entrepreneurial investment—but only to the extent that the patent grant is legally reliable."). After all, "[w]hat farmer or manufacturer will lay himself out for the encouragement given to any particular cultivation or establishment when he can have no assurance that his preparatory labors and advances will not render him a victim to an inconstant government?" The Federalist No. 62 (James Madison). The sea change that petitioner proposes would inject substantial uncertainty, as well as spurring additional litigation over previously-settled rights—both of which discourage investment.

The injection of that substantial new uncertainty would be especially damaging to the very high-tech

and cutting-edge fields for which strong and stable patent protection is essential. As discussed, lay judges engaged in claim construction would be particularly hard-pressed to reject as "unreasonable" the testimony of experts regarding the interpretation of language describing highly technical inventions, and thus particularly likely to invalidate disputed claims as indefinite. And that prospect would have devastating consequences for innovation in important industries. For example, "innovation in the biotechnology and pharmaceutical industries is highly dependent on patent protection" because the rewards "allow pioneer firms to recoup the substantial capital investments made to discover, test, and obtain regulatory approval of new drug products." FTC, *Emerging Health Care Issues: Follow-up Biologic Drug Competition* 30 (2009). Absent such "essential" strong intellectual property protection, pharmaceutical and biotechnology companies will be unwilling to "make the large, high-risk R&D investments required to develop novel medical products." President's Council of Advisors on Science and Technology, *Priorities for Personalized Medicine* 21 (Sept. 2008). And "increased uncertainty and IP litigation in biotech ... would have major negative-incentive effects on capital market decisions for developing private and public biotech firms with promising pipelines." Henry Grabowski et al., *The Market for Follow-On Biologics: How Will It Evolve?*, 25 Health Affairs 1291, 1300 (2006).

2. Petitioner's approach would also discourage investment in many cutting-edge technologies that would be difficult if not impossible to claim with the absolute precision that petitioner would require.

Some inventions by their nature are necessarily described in terms of degree and ranges, rather than more specific quantification. For example, if an inventor seeks to patent a method for making bacteria with an increased ability to take up and replicate exogenous DNA (which those in the art call "improved competence"), it is not necessarily possible to quantify the specific improvement. The improvement varies based on the size of DNA, the number of times the bacteria is frozen, the medium in which the bacteria is grown, and other factors. And, as these conditions were not always standardized, the inventor could not more precisely define "improved" to cover all possible conditions. But a skilled artisan would understand that the bacteria had "improved competence" if they took up more DNA under whatever the conditions and if the skilled artisan could measure that improvement. *See Invitrogen Corp. v. Biocrest Mfg., L.P.*, 424 F.3d 1374, 1383 (Fed. Cir. 2005) (holding that "improved" in the term "improved competence" is not indefinite). Similarly, an inventor might need to describe an innovative mixture of molecules with varying lengths and weights using a range of values by percent, rather than precise amounts. *See, e.g., Teva Pharm. USA, Inc. v. Sandoz, Inc.*, 723 F.3d 1363, 1370 (Fed. Cir. 2013) (holding definite claims describing copolymer composed of a specific percentage of polypeptides within a specific weight range but not specifying the weight of each polypeptide), *cert. granted on other grounds*, 82 U.S.L.W. 3469 (U.S. Mar. 31, 2014) (No. 13-854).

Likewise, many cutting-edge technologies are disclosed in functional terms (such as biological activities, affinities, or noninterference). Although

petitioner's approach would essentially forbid functional limitations (Pet. Br. 36), they are not inherently suspect: they are judged in light of the relevant context, just like other limitations. As the PTO has explained, "[w]hen a claim limitation employs functional language, the examiner's determination of whether the limitation is sufficiently definite will be highly dependent on context (*e.g.*, the disclosure in the specification and the knowledge of a person of ordinary skill in the art)." PTO, *Supplementary Examination Guidelines for Determining Compliance With 35 U.S.C. 112 and for Treatment of Related Issues in Patent Applications*, 76 Fed. Reg. 7162, 7165 (Feb. 9, 2011) ("*PTO Definiteness Guidelines*"). Even when claimed as precisely as the subject matter permits, functional limitations can be essential in informing a skilled artisan of the metes and bounds of the invention.

For example, an inventor developing immunization-related technology cannot describe the affinity of an antibody to an antigen with perfect precision because there is "no standard set of experimental conditions which are used to measure affinities." *Hybritech Inc. v. Monoclonal Antibodies, Inc.*, 802 F.2d 1367, 1385 (Fed. Cir. 1986) (internal quotation marks omitted). However, although antibody affinity varies with factors such as concentration, temperature, and purity, skilled artisans know that an antibody has the requisite affinity if the antibody binds well enough to give a true positive result under optimized reaction conditions that are exemplified in the patent specification. Therefore, claims directed to the necessary "affinity," when "read in light of the specification, reasonably

apprise those skilled in the art and are as precise as the subject matter permits." *Id.* "As a matter of law, no court can demand more." *Id.*; *see also, e.g., Enzo Biochem, Inc. v. Applera Corp.*, 599 F.3d 1325, 1336 (Fed. Cir. 2010) (holding that "linkage group" claim term recited as "not interfering substantially" with hybridization and detection is not indefinite), *cert. denied*, 131 S. Ct. 3020 (2011).

B. Petitioner's Approach Conflates The Distinct Roles Of The PTO And District Courts In The Patent System

Petitioner argues that its view "will not impose an onerous, unbearable burden" because the PTO already rejects a claim as indefinite if it has "'more than one reasonable interpretation'" to a skilled artisan. Pet. Br. 45 (quoting PTO, *Manual of Patent Examining Procedure* ("MPEP") § 2173.02(I) (8th ed. Rev. 9, Aug. 2012)). However, petitioner's approach conflates the distinct roles of the PTO and the federal courts in the patent system. Were the Court to adopt this lower standard, it would rob the system of the stability that is crucial in this area and undermine the statutory presumption of validity.

The PTO has explained that it applies a "lower threshold" during examination "because the patent record is in development and not fixed." MPEP § 2173.02(I); *see also Ex parte Miyazaki*, No. 2007-3300, 2008 WL 5105055, at *5 (B.P.A.I. Nov. 19, 2008); *PTO Definiteness Guidelines*, 76 Fed. Reg. at 7164. The PTO examiner will "construe claims in the broadest reasonable manner during prosecution in an effort to establish a clear record of what [the] applicant intends to claim." MPEP § 2173.02(I). If, under that broad reading, the claim would have "more

than one reasonable interpretation" to a skilled artisan, then the PTO examiner rejects it as indefinite and the "applicant has the ability to provide explanation and/or amend the claims to ensure that the meaning of the language is clear and definite prior to issuance." *Id.* The PTO's goal is to ensure claims are as precise as possible, which may be more precise than necessary to put competitors on notice of the claims' scope. As a practical matter, moreover, a lower threshold at this point makes sense because patent examiners, being persons of skill in the art, are less likely than lay judges to see an ambiguity in highly technical claims where no real ambiguity exists. And the opinion of the patent examiner, as one skilled in the art, regarding whether the claim terms and claim as whole are indefinite, is entitled to some deference.

In contrast, as the PTO has recognized, when claims are challenged in court, they "can be interpreted based on a fully developed prosecution record" and they "enjoy a presumption of validity" under § 282(a). *Id.* They must meet the lower bar of being sufficiently definite to delineate the bounds of the claimed invention, but need do no more. To this end, unlike the PTO's broadest reasonable reading, courts adopt a *narrower* reading (one that skilled artisans would have agreed the claims at minimum encompass) as necessary to avoid finding claims indefinite. *Id.* (citing *Exxon Research & Eng'g*, 265 F.3d at 1375). As the Acting Solicitor General has explained, that difference is appropriate due to "the distinct roles that the PTO and the courts play in the patent system." U.S. *Applera* Br. 17. The courts "appropriately require challengers to overcome the

presumption of validity by offering a persuasive demonstration of indefiniteness, including a showing that reasonable efforts at claim construction are unavailing." *Id.* at 18. This Court should decline petitioner's invitation to upend those well-established, and distinct, roles.

C. Petitioner's Concerns About The "Zone Of Uncertainty" Are Misplaced

From a policy perspective, petitioner claims that the Federal Circuit's doctrine has created a "zone of uncertainty" that "chill[s]" innovation and burdens competitors with the costs of determining a "patent's valid scope." Pet. Br. 38-39; *see also* Amazon Br. 4-5; Microsoft Br. 34-35. But the evidence does not bear that out. "[E]mpirical studies find few clear signs that the patenting of biotechnology inventions is adversely affecting biomedical innovation." David E. Adelman & Kathryn L. DeAngelis, *Patent Metrics: The Mismeasure of Innovation in the Biotech Patent Debate*, 85 Tex. L. Rev. 1677, 1681 (2007); *see also* Adam B. Jaffe, *The U.S. Patent System in Transition: Policy Innovation and the Innovation Process*, 29 Research Policy 531, 540 (2000). Similarly, in the biomedical field, "patenting does not seem to limit research activity significantly, particularly among those doing basic [academic or non-competitive] research." John P. Walsh et al., *Patents, Material Transfers and Access to Research Inputs in Biomedical Research* 3 (Sept. 20, 2005).

Competitors, moreover, are hardly incapable of making rational business decisions in the face of some uncertainty. *Cf.* Pet. Br. 29-30. Claim interpretation, including reasonable alternate interpretations and an analysis of those interpretations in light of the

specification and prosecution history, is a core aspect of any reasoned due diligence opinion. Commercially reasonable actors understand perfectly well that, if they launch products that are very close to the patented competition, they do so at their own peril. And most patent claims include many other limitations that allow for unambiguous design-arounds. Encouraging competitors to develop unambiguously non-infringing products increases diversity in the marketplace and spurs further innovation. Competitors who merely wish to practice the prior art are of course free to do so by marketing faithful copies of old products without any risk of infringement. But petitioner's concern for adequate notice rings hollow where, as here, it understood the claim well enough to consciously incorporate each and every one of its limitations into its product.

What petitioner describes as a deplorable "zone of uncertainty" thus reflects nothing more than the commercially commonplace understanding of every business that the risk of a lawsuit increases the closer they "creep" to a competitor's patent. Under petitioner's proposal, potential competitors would no longer do so at their own peril—they only need satisfy themselves that they could convince a district court that their claim interpretation is one of several objectively reasonable possible interpretations.

CONCLUSION

If the writ is not dismissed as improvidently granted, the judgment of the Federal Circuit should be affirmed.

Respectfully submitted,

RICHARD P. BRESS
Counsel of Record
GABRIEL K. BELL
JENNIFER M. HALBLEIB
LATHAM & WATKINS LLP
555 11th Street, NW
Suite 1000
Washington, DC 20004
(202) 637-2200
richard.bress@lw.com

Counsel for Amicus Curiae

April 2, 2014

AMICUS CURIAE BRIEF

Supreme Court, U.S.
MOTION FILED
MAR 10 2014
Scott S. Harris,
Clerk

No. 13-369

RECORD
AND
BRIEFS

In the
Supreme Court of the United States

NAUTILUS, INC.,

Petitioner,

v.

BIOSIG INSTRUMENTS, INC.,

Respondent.

On Writ of Certiorari to the United States Court of Appeals for the Federal Circuit

---

MOTION FOR LEAVE TO FILE BRIEF OUT OF TIME AND BRIEF OF ANANDA M. CHAKRABARTY, PH.D., AS AMICUS CURIAE IN SUPPORT OF PETITIONER

FRANK PORCELLI
Fish & Richardson P.C.
One Marina Park Drive
Boston, MA 02210-1878
(617) 542-5070
porcelli@fr.com

JUSTIN M. BARNES
Counsel of Record
Fish & Richardson P.C.
12390 El Camino Real
San Diego, CA 92130
(858) 678-5070
barnes@fr.com

(Additional Counsel Listed On Inside Cover)

WILSON-EPES PRINTING CO., INC. – (202) 789-0096 – WASHINGTON, D. C. 20002

Library of Congress
Law Library

KATHERINE KELLY LUTTON
Fish & Richardson P.C.
500 Arguello Street
Suite 500
Redwood City, CA 94063
(650) 839-5070
lutton@fr.com

JONATHAN KALTNER
Kaltner Consulting LLC
Internal Innovation
Management
Summit, NJ 07901
(973) 255-9497
Kaltner.consulting@gmail.com

MOTION FOR LEAVE TO FILE OUT OF TIME AMICUS CURIAE BRIEF IN SUPPORT OF PETITIONER

Ananda M. Chakrabarty, Ph.D. (hereinafter "Dr. Chakrabarty" or "Amicus") respectfully moves for leave to file out of time the attached amicus curiae brief. Dr. Chakrabarty has received consent to file this amicus brief from Petitioner Nautilus, Inc.. Dr. Chakrabarty also has provided notice to counsel for respondent Biosig Instruments, Inc. of Dr. Chakrabarty's intent to file a brief. Respondent has not responded as yet on whether it will consent or not.

The deadline for filing the attached brief was March 3, 2014. A draft amicus brief was ready for Amicus to review, edit, and approve by the afternoon of Saturday, March 1 and was sent to him electronically that day. Had he been available, that would have given Amicus sufficient time to review and edit the draft so that the final version could have been timely printed and filed with the Court by March 3. Unfortunately, Amicus was not in the United States, his place of residence and work, when he received the draft, and he had not been there since February 24, when he traveled to South Africa, where he had been attending a meeting since February 26. He advised counsel that he had further prior commitments on Sunday, March 2 in South Africa, would be traveling back to the United States

through Germany on March 2-3, and would not return to his office in Chicago until March 4. He further indicated that a lot of prior commitments and duties had accumulated while he was away and awaited him upon his return to the office. He said that because of that he would not be able to complete his review and give edits and other input regarding the draft until Thursday, March 6. As promised, Dr. Chakrabarty returned to Chicago on the evening of March 3, and due to the prior commitments he had warned counsel of, he was not able to complete his review of the draft and provide initial suggestions for editing until Thursday, March 6. Counsel addressed those suggestions and provided a revised draft to Amicus on Friday March 7. He in turn provided his final suggested edits on Friday evening, which counsel addressed and sent a final draft to him on Saturday, March 8, which he approved later that day. The next possible day for printing and filing the brief was therefore Monday, March 10.

In addition to the extenuating circumstances discussed above, Amicus believes that this Amicus Brief will be of significant value to the Court in deciding this very important case involving U.S. patent law and impacting the quality of claims and U.S. patents, because it offers the Court something unique. Rather than elaborating on the problem, which Petitioner and other amici have ably done, this Amicus Brief provides *a practical solution* to the problem of claims that fail to particularly point out and distinctly claim what the inventor regards as the

invention under 35 U.S.C. §112 ¶2. What Amicus believes the Court will find even more significant, the practical solution is an approach or methodology, centered on what the invention is, that has been developed and applied by this Court in a line of precedent spanning seventy years, from 1876 to 1942. Amicus submits that, based on his own perspective as an inventor, researcher, supervisor of and participant in the patent preparation and prosecution process, and active promoter of the U.S. and other patent systems and their laws, this invention-centric methodology will be as effective today and going forward as it was when applied by this Court over so many decades spanning the 19th and 20th centuries. It is a methodology that needs to be followed not only by the courts but equally, if not more importantly, by inventors, their attorneys and patent agents and patent examiners.

Amicus believes that if this approach is faithfully and uniformly followed, it will result in better claim drafting, a higher quality of patent applications and patents, and a furtherance of the Constitutional objective of promoting the progress of the Useful Arts, all ultimately to the benefit of the public.

Whereupon Amicus respectfully requests that his Motion to File Out of Time be granted.

March 10, 2014

Respectfully submitted,

Frank Porcelli
Fish & Richardson P.C.
One Marina Park Drive
Boston, MA 02210-1878
(617) 542-5070
porcelli@fr.com

Justin M. Barnes
Counsel of Record
Fish & Richardson P.C.
12390 El Camino Real
San Diego, CA 92130
(858) 678-5070
barnes@fr.com

Counsel for Amicus Curiae
Ananda M. Chakrabarty, Ph.D.

TABLE OF CONTENTS

Page

TABLE OF AUTHORITIES iii

INTEREST OF THE AMICUS CURIAE 1

SUMMARY OF THE ARGUMENT 3

ARGUMENT 4

I. THE REQUIREMENTS OF DISCLOSURE OF THE INVENTION IN THE SPECIFICATION AND CLAIMING THE INVENTION IN THE CLAIMS GO HAND IN HAND AND SHOULD BE CONSIDERED TOGETHER 4

A. Precedent of This Court shows the complementary roles of the specification and the claims 4

B. The Statutory History of §112 Confirms the complementary roles of the specification and the claims 6

II. THE SOLUTION TO THE PROBLEM CAUSED BY CLAIMS THAT FAIL TO COMPLY WITH THE STATUTE IS TO RETURN TO THE LONGSTANDING INVENTION-CENTERED TEST DEVELOPED AND APPLIED IN THIS COURT'S PRECEDENT 12

A. The statute sets the invention as the starting point 12

B. A long line of Supreme Court precedent follows the statute's directive and provides a practical solution to the problem of claims that fail to comply with the statute : first determine what the invention is, and then determine whether the invention is reflected in the specification and claims 13

III. APPLICATION OF THE INVENTION-CENTERED APPROACH TO THE PRESENT CASE 33

CONCLUSION 36

TABLE OF AUTHORITIES

Cases **Page(s)**

Altoona Publix Theatres, Inc. v. American Tri-Ergon Corp., 294 U.S. 477 (1935) 12

Diamond v. Chakrabarty, 447 U.S. 303 (1980) 1

Eibel Process Co. v. Minn. & Ont. Paper Co., 261 U.S. 45 (1923) 26, 27, 30

Evans v. Eaton, 20 U.S. 356 ..... 7, 10, 11, 36

General Electric Co. v. Wabash Appliance Corp., 304 U.S. 364 (1938) 22, 31, 36

Gill v. United States, 160 U.S. 426 (1896) 13

Gould Inc. v. United States, 579 F.2d 571.(Ct. Cl. 1978) 13

Holland Furniture Co. v. Perkins Glue Co., 277 U.S. 245 (1928) 21, 26, 35

Howe Machine Co. v. National Needle Co., 134 U.S. 388 (1890) 12

Keystone Bridge Co. v. Phoenix Iron Co., 95 U.S. 274 (1877) 11

KSR Int'l Co. v. Teleflex, Inc., 550 U.S. 398 (2007), reaffirmed 32

TABLE OF AUTHORITIES—continued

Page(s)

Leeds & Catlin Co. v. Victor Talking Machine Co., 213 U.S. 301 (1909) 13

Loom Co. v. Higgins, 105 U.S. 580 (1882) 16

Mahn v. Harwood, 112 U.S. 354 (1884) 4

Merrill v. Yeomans, 94 U.S. 568 ..... 14, 27, 31

Motion Picture Patents Co. v. Universal Film Co., 243 U.S. 502 (1917) 12

Permutit Co. v. Graver Corp., 284 U.S. 52 (1931) ..... passim

Pfaff v. Wells Elecs, Inc., 525 U.S. 55 (1998) 13

Smith v. Snow et al., 294 U.S. 1 (1935) 12

Steward v. American Lava Co., 215 U.S. 161 (1919) 20, 21

United Carbon Co. v. Binney & Smith Co., 317 U.S. 228 (1942) 25

Universal Oil Products Co. v. Globe Oil & Refining Co., 322 U.S. 471 (1944) 5

TABLE OF AUTHORITIES—continued

Page(s)

Western Electric Manufacturing Co. v. Ansonia Brass & Copper Co., 114 U.S. 447 (1885) 16

White v. Dunbar, 119 U.S. 47 (1886) 12, 13

Statutes

35 U.S.C. § 112 ..... passim

Act of July 4, 1836, ch. 357, §6, 5 Stat. 117, 119 6

Patent Act of 1790 6

Patent Act of 1793 6

Patent Act of 1836 ..... 6, 11

Patent Law of India, §3(d) 32

Other Authorities

Oliver Wendell Holmes, Jr., The Common Law, Boston: Little, Brown, and Company,1881 37

INTEREST OF THE AMICUS CURIAE[1]

Amicus Curiae Ananda M. Chakrabarty, Ph.D. ("Amicus," or "Professor Chakrabarty"), is a Distinguished University Professor in the Department of Microbiology and Immunology at the University of Illinois at Chicago College of Medicine, where he focuses his research on the development of novel types of anticancer drugs. Professor Chakrabarty is internationally recognized as one of the world's preeminent microbiologists, as reflected by his numerous awards associated with his pioneering research in the fields of genetic engineering and immunology. His role in developing a biologically engineered strain of oil-consuming bacteria revolutionized the manner whereby environmentally hazardous oil spills are contained and decontaminated, and led to his receiving the "Industrial Scientist of the Year" award in 1975 by the Industrial Research Organization of the United States. He is named as an inventor on twelve (12) United States patents covering the fields of microbiology, immunology and cancer treatment including, most notably, the patent covering a genetically-modified strain of bacterium that this Court held to constitute patentable subject matter in its seminal ruling in *Diamond v. Chakrabarty*, 447 U.S. 303 (1980).

As a world-renowned researcher, scientist and recognized inventor in his own right, as well as being

---

[1] No counsel for a party authored this brief in whole or in part, and no such counsel or party made a monetary contribution intended to fund the preparation or submission of this brief. No person other than the *amicus curiae* or his counsel made a monetary contribution to its preparation or submission.

a successful entrepreneur, Professor Chakrabarty has a deep commitment to ensuring that the United States patent laws promote ingenuity and are interpreted consistent with the Constitution and recognized scientific principles. He frequently lectures on what is the role of science in society, and has presented his opinions on that topic and others concerning intellectual property to conference panels comprised of members of the judiciary from inside and outside the United States, including members of the Supreme Courts of several nations.

As a research scientist, inventor, entrepreneur and supervisor of and collaborator with other scientists in his laboratory, Professor Chakrabarty has a keen interest in maintaining high quality standards for U.S. patent applications and patents, particularly with respect to disclosure of the invention in the specification, enablement in the specification of skilled persons to practice the invention, and patent claims that particularly point out and distinctly claim the invention in accordance with the first and second paragraphs of 35 U.S.C. § 112, respectively. As a member of the academy who regularly engages with other colleagues in collaborative research into potentially new patentable compositions, he is uniquely positioned to experience and observe the patent application writing process and the subsequent examination process, working with both patent attorneys and patent agents in those processes. Professor Chakrabarty has no direct stake in the outcome of this Petition, and instead seeks only to ensure that the United States patent laws develop in a way that best promotes innovation and competition, and renders proper protection to those individuals who

are, in fact, the originators of new and important inventive concepts.

SUMMARY OF THE ARGUMENT

Petitioner Nautilus' brief very clearly outlines the problem caused by the failure of a patent claim to comply with the statutory requirement of §112, ¶2, that a claim must "particularly point[] out and distinctly claim[] the subject matter which the inventor ... regards as the invention." This brief proposes a solution to the problem.

We claim no authorship for this solution, because it is a methodology developed and applied in a distinct line of cases handed down by this Court from the 1870s to the 1940s[2], to carry out the dictates of the statute and to further the Constitutional objective of promoting the progress of the Useful Arts (Art. I, §8, cl.8). The methodology simply addresses three related questions: (1) What was the invention; (2) was that invention disclosed in the specification; and (3) was that invention claimed? This methodology could be described as an "invention-centered approach," as it always begins with identifying the actual invention.

This Court made it clear that under this methodology, the specification and claims had to pass muster upon issuance, and should not have to await the outcome of protracted patent litigation (including appeals) to find out whether they passed. The Court has explained that this timing was critical, such that the specification's description of

---

[2] It does not appear that this Court has addressed this particular issue since the 1940s.

the invention and the claims could properly serve their proper public notice function.

We urge the Court to reaffirm its invention-centered methodology.

ARGUMENT

I. THE REQUIREMENTS OF DISCLOSURE OF THE INVENTION IN THE SPECIFICATION AND CLAIMING THE INVENTION IN THE CLAIMS GO HAND IN HAND AND SHOULD BE CONSIDERED TOGETHER

Although the only issue decided by the district court and the court of appeals in this case related to the claims, in determining that issue the district court focused on whether what the inventor regarded as his invention was described in the specification. Indeed, as we shall see, this Court has routinely considered whether there is a "description of the invention" required by the first paragraph of §112 even when examining only the claims' compliance with the second paragraph. This is not surprising, because the two requirements naturally complement each other. Precedent of this Court and the statutory history of §112 explain, and justify, this nexus.

A. Precedent of This Court shows the complementary roles of the specification and the claims

The public notice function of a patent claim was explained by this Court in *Mahn v. Harwood*, 112 U.S. 354, 360-61 (1884):

> The taking out of a patent which has (as the law requires it to have) a specific claim, is notice to all the world, of the

> most public and solemn kind, that all those parts of the art, machine or manufacture set out and described in the specification and not embraced in such specific claim, are not claimed by the patentee, — at least not claimed in and by that patent.***. [S]o far as that patent is concerned, the claim actually made operates in law as a disclaimer of what is not claimed; and of all this the law charges the patentee with the fullest notice. Then, what is the situation? The public is notified and informed by the most solemn act on the part of the patentee, that his claim to invention is for such and such an element or combination, and for nothing more. Of course, what is not claimed is public property. The presumption is, and such is generally the fact, that what is not claimed was not invented by the patentee, but was known and used before he made his invention. But, whether so or not, his own act has made it public property if it was not so before. The patent itself, as soon as it is issued, is the evidence of this. The public has the undoubted right to use, and it is to be presumed does use, what is not specifically claimed in the patent.

Closely related to the public notice function is the requirement of sufficiency of disclosure of information regarding the invention in the patent specification. *Universal Oil Products Co. v. Globe Oil & Refining Co.*, 322 U.S. 471, 484 (1944), details the "quid pro quo" of the patent statutes:

> As a reward for inventions and to encourage their disclosure, the United States offers a seventeen-year monopoly to an inventor who refrains from keeping his invention a trade secret. But the quid pro quo is disclosure of a process or device in sufficient detail to enable one skilled in the art to practice the invention once the period of the monopoly has expired; and the same precision of disclosure is likewise essential to warn the industry concerned of the precise scope of the monopoly asserted.

B. The Statutory History of §112 Confirms the complementary roles of the specification and the claims

It was not until the Patent Act of 1836 that there was an express requirement that the inventor "claim" what was invented. Act of July 4, 1836, ch. 357, §6, 5 Stat. 117, 119. But before that, the first patent statute, the Patent Act of 1790, required that there be a description of the invention in the specification that distinguished the invention from what was known before, *i.e.*, prior art (§2). The next statute, the Patent Act of 1793, added the requirement that in the case of machines, the invention be described so as to distinguish it from other inventions (§3). Importantly, this requirement was interpreted by this Court as a requirement to disclose the inventive concept, separate and apart from the requirement for a detailed disclosure of how to make a structure that would implement the concept (the latter today referred to as the

"enablement" requirement). Both requirements are set forth in Section 3 of the Patent Act of 1793:

> [E]very inventor...shall deliver a written description of his invention, and of the manner of using, or process of compounding the same, in such full, clear and exact terms, as to distinguish the same from all other things before known, and to enable any person skilled in the art or science, of which it is a branch, or with which it is most nearly connected, to make, compound, and use the same. And in the case of any machine, he shall fully explain the principle, and the several modes in which he has contemplated the application of that principle or character, by which it may be distinguished from other inventions ....

Thus, in 1822 in *Evans v. Eaton*, 20 U.S. 356, Justice Story, writing for the Court, interpreted the 1793 Act's provisions as having two separate requirements:

> The third section of the [1793] patent act requires, as has been already stated, that the party 'shall deliver a written description of his invention, in such full, clear, and exact terms, as to distinguish the same from all other things before known, and to enable any person skilled in the art or science, & c. &c. to make, compound, and use the same.' *The specification, then, has two objects:* one is to make

known the manner of constructing the machine (if the invention is of a machine) so as *to enable artizans to make and use it, and thus to give the public the full benefit of the discovery after the expiration of the patent.* It is not pretended that the plaintiff's patent is not in this respect sufficiently exact and minute in the description. But whether it be so or not, is not material to the present inquiry. *The other object of the specification is, to put the public in possession of what the party claims as his own invention, so as to ascertain if he claim any thing that is in common use, or is already known, and to guard against prejudice or injury from the use of an invention which the party may otherwise innocently suppose not to be patented. It is, therefore, for the purpose of warning an innocent purchaser or other person using a machine, of his infringement of the patent; and at the same time of taking from the inventor the means of practising upon the credulity or the fears of other persons, by pretending that his invention is more than what it really is, or different from its ostensible objects, that the patentee is required to distinguish his invention in his specification.*[3]

---

[3] Emphasis added here and throughout unless otherwise noted.

It is notable that although the statute did not then use the word "claim" (usage as a verb) or "claims" (usage as a noun) with regard to the invention, the Court here nevertheless used that term to describe the purpose of the requirement that the specification have a "written description of [the] invention... as to distinguish the same from all other things before known." *Id.* at 434. Significantly, the Court enumerated many of the same policies that later supported the requirement for clear and distinct patent claims. This is not surprising. Disclosure of the inventive concept in the specification is the necessary counterpart for clearly and distinctly claiming that concept in the claims. And as explained below, this Court later made that very point on several occasions.

The Court further elaborated on the importance of distinguishing between the new and the old in the specification, the basis for the later statutory requirement of "particularly pointing out and distinctly claiming" for the claims:

> Nothing can be more direct than the very words of the act. The specification must describe the invention 'in such full, clear, and distinct terms, as to distinguish the same *from all other things before known*.' How can that be a sufficient specification of an improvement in a machine, which does not distinguish what the improvement is, nor state in what it consists, nor how far the invention extends? Which describes the machine fully and accurately, as a whole, mixing up the new and old, but does

> not in the slightest degree explain what is the nature or limit of the improvement which the party claims as his own? It seems to us perfectly clear that such a specification is indispensable. We do not say that the party is bound to describe the old machine; but we are of opinion that he ought to describe what his own improvement is, and to limit his patent to such improvement.

Id. at 434-35 (emphasis in original).

The facts of *Evans v. Eaton* are illustrative of why an enabling disclosure is not sufficient to be a disclosure of the invention. The patentee had disclosed a supposedly new hopper boy, a machine used in a flour mill. *Id.* at 366. The hopper boy was drawn in detail, and there was no question that a person of skill in the art could make it from the drawing and description in the specification. *Id.* at 414-15. But the patent failed to point out what was new about Evans' hopper boy to distinguish it from previously known hopper boys, and based on that failure the Court affirmed the lower court judgment of invalidity of the patent. *Id.* at 433-35.

Describing a machine or other invention in great structural detail without ever stating what is new about it is a recurrent pattern in later decisions of this Court striking down patent claims for failure to particularly point out and distinctly claim the invention. The present case presents the same issue with respect to application of §112 ¶2.

After *Evans v. Eaton* Congress first enacted the requirement for particularly claiming the inventive subject matter in the Patent Act of 1836. Clearly it was asking too much of the specification to do the double duty of both describing the invention and distinguishing it from prior art and other inventions. This Court in an opinion written by Mr. Justice Bradley outlined the problem and how Congress addressed it in that act in *Keystone Bridge Co. v. Phoenix Iron Co.*, 95 U.S. 274, 278 (1877):

> Since the act of 1836, the patent laws require that an applicant for a patent shall not only, by a specification in writing, fully explain his invention, but that he "shall particularly specify and point out the part, improvement, or combination which he claims as his own invention or discovery." [§6, Patent Act of 1836] *This provision was inserted in the law for the purpose of relieving the courts from the duty of ascertaining the exact invention of the patentee by inference and conjecture, derived from a laborious examination of previous inventions, and a comparison thereof with that claimed by him.* This duty is now cast upon the Patent Office. There his claim is, or is supposed to be, examined, scrutinized, limited, and made to conform to what he is entitled to.

II. THE SOLUTION TO THE PROBLEM CAUSED BY CLAIMS THAT FAIL TO COMPLY WITH THE STATUTE IS TO RETURN TO THE LONGSTANDING INVENTION-CENTERED TEST DEVELOPED AND APPLIED IN THIS COURT'S PRECEDENT

A. The statute sets the invention as the starting point

As noted, the language of the statute itself makes clear that the claim is to be measured by whether it particularly points out and distinctly claims *what the inventor regards as the invention*. This naturally complements the requirement in the statute for a "written description of the invention" in the specification. In this respect the statutory language is a better starting point than the term "indefiniteness," because that term does not suggest the importance of finding out what the invention is *first* and then *comparing it* to what has been disclosed and claimed.

It is thus a bedrock principle of patent law that the patentee *defines* the patented invention with the claim, *not* that the claim and the invention are one and the same thing. *White v. Dunbar*, 119 U.S. 47, 52 (1886) ("the claim is a statutory requirement prescribed for the very purpose of making the patentee define precisely what his invention is..."). This principle was reaffirmed by this Court numerous times throughout the next sixty years, well into the 1930's. [4]"

---

[4] *Howe Machine Co. v. National Needle Co.*, 134 U.S. 388 (1890); *Motion Picture Patents Co. v. Universal Film Co.*, 243

The statute thus draws a distinction between the claim on the one hand and what the inventor regards as the invention on the other. "Invention" is here used in the narrow sense of simply being the inventive concept. *Gill v. United States*, 160 U.S. 426, 434 (1896) ("In every case the idea conceived is the invention."); *Pfaff v. Wells Elecs, Inc.*, 525 U.S. 55, 60 (1998) ("The primary meaning of the word 'invention' in the Patent Act unquestionably refers to the inventor's conception rather than to a physical embodiment of that idea."). A corollary principle is that each claim defines an independent invention. *Leeds & Catlin Co. v. Victor Talking Machine Co.*, 213 U.S. 301, 319 (1909) ("Claims are independent inventions."); *Gould Inc. v. United States*, 579 F.2d 571, 576.(Ct. Cl. 1978)("[E]ach claim of a patent is a separate and distinct invention.")

B. A long line of Supreme Court precedent follows the statute's directive and provides a practical solution to the problem of claims that fail to comply with the statute: first determine what the invention is, and then determine whether the invention is reflected in the specification and claims

We submit that it is not enough for this Court to reaffirm the statute. It should go further and provide a practical solution going forward to the problem of claims that fail to comply with §112 ¶2. Fortunately, there is no need to re-invent the wheel. This Court has already established a sound approach in a line of precedents beginning almost 140 years

---

U.S. 502 (1917); *Smith v. Snow et al.*, 294 U.S. 1 (1935); and *Altoona Publix Theatres, Inc. v. American Tri-Ergon Corp.*, 294 U.S. 477, 487 (1935) ("Under the statute it is the claims of the patent which define the invention.[citing *White v. Dunbar*]").

ago, and the approach is as valid now as it was when first formulated. Over a period of almost seventy years, from 1876 to 1942, this Court issued a series of decisions that consistently followed a simple, practical methodology in testing whether a patent adequately described the invention and adequately claimed it. This invention-centered approach asked:

1) What did the inventor invent?;

2) Was that invention described in the specification?; and

3) Was that invention claimed?

These three questions tested the description against the first paragraph, and the claim against the second paragraph, of §112 or its predecessors. If the claim was deficient in not particularly pointing out and distinctly claiming what the inventor regarded as the invention, then the Court often used the term "indefinite" for the invalid claim.

The first decision in this line was *Merrill v. Yeomans*, 94 U.S. 568, in 1876. There, the ultimate question was whether the claim was directed to a product (deodorized oil) or a process for making the product. *Id.* at 568. If the latter, there was no infringement. *Id.* at 569. The first thing the Court did was to determine what were the possible inventions made by inventor Merrill. It concluded there were three: the product, the process for making the product, and a special piece of equipment used in the process. *Id.* It then found that the three inventions were all disclosed in the specification, although the least information was given for the deodorized oil product. Finally it asked the question as to which of the inventions were claimed. *Id.* at 570-71. The piece of equipment was specifically

claimed but not relevant to infringement. *Id.* The other claim at issue was ambiguous as to whether it covered the product or the process for making the product, with the Court observing that "[n]o such question [as to what the claim meant] could have arisen if appellant had used language which clearly and distinctly points out what it is that he claims in his invention." *Id.* at 569. Rather than invalidate the claim for not particularly pointing out and distinctly claiming the invention, the Court construed the claim as being for a process for making the product and found the defendant did not infringe because it was not a manufacturer, just a distributor of deodorized oil. *Id.* at 573-74.

The Court then described the importance of clear, distinct claiming in words that ring true today:

> *The developed and improved condition of the patent law, and of the principles which govern the exclusive rights conferred by it, leave no excuse for ambiguous language or vague descriptions.* The public should not be deprived of rights supposed to belong to it, without being clearly told what it is that limits these rights. The genius of the inventor, constantly making improvements in existing patents,-- a process which gives to the patent system its greatest value, -- should not be restrained by vague and indefinite descriptions of claims in existing patents from the salutary and necessary right of improving on that which has already been invented.

Id. at 573. The Court concluded this discussion not only by emphasizing the need for a clear description of the invention and claim in the patent but also went back to the starting point by stressing the need for the patentee to understand what he or she invented:

> It seems to us that nothing can be more just and fair, both to the patentee and to the public, *than that the former should understand*, and correctly describe, *just what he has invented*, and for what he claims a patent.

Id. at 573-74.

Six years later the Court posed and answered the same questions in *Loom Co. v. Higgins*, 105 U.S. 580 (1882). The Court began by recounting what the inventor Webster had invented, which allowed looms using his improvement to significantly increase productivity. *Id.* at 589-90. It then concluded that the invention was sufficiently described in the specification to comply with the statute. *Id.* at 599. Finally, it said the claims passed muster as well: "*With the explanation of the invention already given*, the meaning of this claim is quite obvious." *Id.* at 590.

In *Western Electric Manufacturing Co. v. Ansonia Brass & Copper Co.*, 114 U.S. 447 (1885), the meaning was not so obvious. There, inventor Olmstead had invented a process for coating telegraphic wire to insulate it. *Id.* at 450-51. The Court found that the invention as claimed was not novel because of prior art. *Id.* at 451. The patentee responded that the invention included a cooling step that was absent from the prior process and that

resulted in the improved product. *Id.* at 452. The Court readily disposed of that contention:

> But neither the specification nor claim of the Olmstead patent mentions, as a part of the process, the cooling of the wax or paraffine coating before compressing it upon the wire. The appellant's counsel, however, contends that it must be considered a part of the process, because the polished appearance of the surface of the covering described in the specification is the result of allowing the paraffine or wax to cool before compressing it upon the wire. But, clearly, a patentee cannot claim the benefit of an element of his invention thus vaguely and indefinitely hinted at.
>
> * * *
>
> It is clear that if the patentee intended to include the cooling of the wax or paraffine before compressing it upon the wire, *he has failed to describe in his specification that element of his invention, as required by the statute.* Instead of describing the process he mentions a quality of the product and asks the court to infer the process from that quality. Such a vague and inverted method of description is not a compliance with the statute. *That part of the alleged invention is not even referred to in the most distant manner in the claim.*

Id. at 452.

Even after the turn of the twentieth century the Court continued to pose and answer these same three invention-centered questions. In *Minerals Separation, Ltd. v. Butte & Superior Mining Co.*, the Court determined that the inventors had invented a new process for recovering valuable metals by a process that caused the metal in a water/ore slurry to float on top as part of a froth. 250 U.S. 336, 350-51 (1919). At trial the patentee argued that the invention was the discovery that if certain so-called frothing oils (for example, pine oil) were added to the slurry in a very small amount (less than one percent of the ore), flotation of the metals as part of the froth would result, making the metals easily recoverable. *Id.* at 345. The patentee further argued that petroleum-based oils were not "frothing oils" so any use of them would not count toward the one percent maximum. *Id.* at 342-43. The defendant had originally used less than one percent oil, and there was no dispute that it infringed. *Id.* at 342. But then it changed its process, with a mixture of less than one percent pine oil and enough petroleum oils to bring the total oil to 1.5 percent. *Id.*

Based on what the inventor argued the invention was, the Court found that the second and third invention-centered questions were answered in the negative. *Id.* at 349. The specification did not disclose that there were special "frothing oils" but simply disclosed that any oil used in in an amount less than one percent would work. *Id.* Also, there was nothing to distinguish between frothing oils and other oils in the claims, only a limitation regarding the maximum amount that could be used. *Id.* at 348-49. The Court did not invalidate the claim for failure

to particularly point out and distinctly claim the invention, but instead ruled that the defendant's new process did not infringe because it used more than one percent oil. *Id.* at 354. The Court did, however, state that the patentee's interpretation of its claim would have rendered the claim invalid:

> No notice is given to the public, and it is nowhere 'particularly pointed out' in the claims, that some oils or combination of oils, having a preferential affinity for metalliferous matter, are more useful than others in the process, or that some may be used successfully and some not, or that some are 'frothing oils,' a designation not appearing in the patent, and that some are not ... To give such a construction to the patent would subordinate the clear description contained in it of what are oils of the process, to an implied and vague description and classification which would leave the whole subject again at large, to become a field for further experimentation, without definition in the patent of what oils or froths would satisfy it. *So interpreted, the patent could not reasonably be said to contain a disclosure of the discovered process in the 'full, clear, concise and exact terms' required by law (R. S. § 4888 [Comp. St. § 9432]), and the claims might conceivably be said to fall short of 'particularly pointing out and distinctly claiming' any discovery at all within the meaning of the act of Congress.*

Id. at 348-50.

In the same year as *Minerals Separation* the Court asked and answered the same three questions in a mechanical case. In *Steward v. American Lava Co.*, 215 U.S. 161 (1919), the Court found that Dolan's purported invention of a new acetylene burner tip was neither disclosed nor claimed. The supposed invention, which inventor Dolan refused to adopt in his testimony in the case and which he said was suggested by his patent attorney, was making the distance of the tip cylinder between the tip's lower narrowed gas inlet and higher discharge orifice very small to create an air envelope surrounding the flame that cools the exterior of the flame and thereby prevents a deposit of carbon (soot) at the burner tip, which could cause clogging. This Court found no disclosure of the significance of a shortened cylinder, nor any discussion of shortness at all, and likewise nothing in the claim about this factor. Mr. Justice Holmes, writing for the Court, pointed out:

> But, if the relative shortness of the cylinder had been understood to be an essential thing, the patent naturally would have said so.*** [It] seems to us impossible to say that sufficient instructions are given on the supposed vital point. Again, no proportions are indicated...., [I]f the plaintiffs' theory is the true one, the public are told little more than to try experiments until they find a burner that works.

215 U.S. 166-67.

The Court had also focused on the claims, which likewise made no mention of either cooling or the

shortness of the cylinder, and had concluded that in view of the non-disclosure of these features in the specification, the claims could not possibly be understood as directed to this inventive concept:

> Moreover, unless the theory of the cooling envelop so dominates the specification as to explain what is doubtful and ambiguous in it, the claim would not be for what now is said to be the characteristic of the Dolan tip.

Id. at 165.

Finally, one of the patent drawings (Fig. 1, reproduced at 215 U.S. at 170, fn.) arguably showed a tip with a "short" cylinder, but even the patentee did not try to rely on this, and in any event there was no linkage of shortness to resultant cooling and prevention of clogging.

In *Holland Furniture Co. v. Perkins Glue Co.*, 277 U.S. 245, 247 (1928), the inventor had discovered a process for making a starch glue that for the first time had the valuable properties of animal glue. As the Court found, the real invention was twofold: a manufacturing process that had the novel step of degenerating the starch within a specific range of degeneration (a measure of the water-absorptivity of the starch), and a glue product that had as an ingredient a starch having a water-absorptivity within that range and that had properties as good as animal glue. *Id.* at 250. There was no question that both the process and the product were adequately disclosed in the specification. *See id.* at 248-50. And there was no question that the process was clearly claimed, though it was also undisputed that the petitioner/defendant did not use the claimed process.

Id. at 250, 253. The dispositive question was whether the invention of the product, as opposed to the process, had been particularly and distinctly claimed.

The Court held that the "real invention" of the product was not claimed. *Id.* at 255. The claim said nothing about the water absorptivity of the starch. *Id.* at 250. A reference in the claim to the starch being semifluid was characteristic of all known starch glues. *Id.* The only thing new about the product in the claim was that it had "substantially the properties of animal glue." *Id.* at 251. But the claim did not include the novel structural or chemical features that gave the glue those properties, in this case specifically the range of water absorptivity of the starch ingredient. The Court explained why a patentee, having invented a particular starch glue that had the properties of animal glue, could not claim *any* starch glue that had those properties:

> A claim so broad, if allowed, would operate to enable the inventor who has discovered that a defined type of starch answers the required purpose to exclude others from all other types of starch and so foreclose efforts to discover other and better types. The patent monopoly would thus be extended beyond the discovery and would discourage rather than promote invention.

Id. at 257.

Ten years later this Court undertook a similar analysis on a similar fact situation in *General*

Electric Co. v. Wabash Appliance Corp., 304 U.S. 364 (1938). The Court determined that the inventor Pacz had invented a process for making a longer-lasting tungsten filament for a light bulb. *Id.* at 366. The issue was whether Pacz's product invention was adequately disclosed and adequately claimed, and the Court found it was not on both counts. *Id.* at 368-69. Both the specification and the claims suffered from the same deficiency: the only thing that distinguished Pacz's filament from prior art filaments was the generic proposition that it did not have the problems of the prior art, in much the same way that Perkins' starch glue claims distinguished the prior art only by thie fact that his glue had the properties of animal glue. *Id.* Pacz claim 25 was representative:

> 25. A filament for electric incandescent lamps or other devices, composed substantially of tungsten and *made up mainly of a number of comparatively large grains of such size and contour as to prevent substantial sagging and offsetting* during a normal or commercially useful life for such a lamp or other device.

Id. at 368.

The Court found that construing the claim in light of the specification did not save it because the specification did not describe what was meant by "comparatively large," "size," and "contour" or how those characteristics distinguished the prior art. *Id.* at 369-70. In fact the Court observed that prior art tungsten filaments had "comparatively large grains." *Id.* at 370.

The Court elaborated on the importance of distinct and specific claims and the policies served by them:

> Recognizing that most inventions represent improvements on some existing article, process, or machine, and that a description of the invention must in large part set out what is old in order to facilitate the understanding of what is new, Congress requires of the applicant 'a distinct and specific statement of what he claims to be new, and to be his invention.' ... The statute seeks to guard against unreasonable advantages to the patentee and disadvantages to others arising from uncertainty as to their rights. The inventor must 'inform the public during the life of the patent of the limits of the monopoly asserted, so that it may be known which features may be safely used or manufactured without a license and which may not.' The claims 'measure the invention.' Patentees may reasonably anticipate that claimed inventions, improvements, and discoveries, turning on points so refined as the granular structure of products, require precise descriptions of the new characteristic for which protection is sought. In a limited field the variant must be clearly defined.

Id. at 368-69.

Finally, the Court rejected the notion that complex technology should let the patentee off the hook for distinct and specific claiming:

> The difficulty of making adequate description may have some bearing on the sufficiency of the description attempted, but it cannot justify a claim describing nothing new except perhaps in functional terms. It may be doubted whether one who discovers or invents a product he knows to be new will ever find it impossible to describe some aspect of its novelty.

Id. at 373.

Four years later, in *United Carbon Co. v. Binney & Smith Co.*, 317 U.S. 228, 238 (1942), this Court concluded that the invention at issue was neither adequately described nor claimed. The inventors, Weigand and Venuto, had invented a new process for converting carbon black, which readily forms clouds of dust, into an aggregate dust-free form, and the aggregate carbon black product they produced was apparently new as well. *Id.* at 230. They claimed their invention both as a process and as a product. *Id.* The problem was that the process was expensive and was quickly made obsolete by the design-around efforts of others, resulting in much cheaper processes for producing the same aggregate dust-free product. *Id.* at 231. The patentee hence could only assert its product claims against the other carbon black manufacturers. The two asserted product claims read as follows:

> 1. Sustantially (sic) pure carbon black in the form of commercially uniform,

> comparatively small, rounded, smooth aggregates having a spongy or porous interior.
>
> 2. As an article of manufacture, a pellet of approximately one-sixteenth of an inch in diameter and formed of a porous mass of substantially pure carbon black.

Id. at 231-32.

The Court found that the specification shed virtually no light on what any of the claim terms meant:

> Respondent urges that the claims must be read in the light of the patent specification, and that as so read they are sufficiently definite. Assuming the propriety of this method of construction ... it does not have the effect claimed, for the description in the specification is itself almost entirely in terms of function.

Id. at 234-35. Accordingly, the Court found that the claims failed to comply with the statute. *Id.* at 235-37 (citing *Holland Furniture, 277 U.S. 245*, and *General Electric v. Wabash, 304 U.S. 364*).

Finally, the Court's decisions in *Permutit* and *Eibel*, which were decided during this same general time period, serve as highly instructive opinions regarding claim drafting, especially as it relates to mechanical inventions or other inventions where structural drawings can be important (such as the one in the present case). *Permutit Co. v. Graver*

Corp., 284 U.S. 52 (1931); *Eibel Process Co. v. Minn. & Ont. Paper Co.*, 261 U.S. 45 (1923).

In *Permutit v. Graver*, 284 U.S. at 59-60, this Court succinctly explained why it is critical that the inventor and his or her attorney determine *before* the patent application is prepared what the inventor has invented, reflecting the words of *Merrill v. Yeomans* that "[i]t seems to us that nothing can be more just and fair, both to the patentee and to the public, than that the former should *understand*, and correctly describe, *just what he has invented*, and for what he claims a patent." *Merrill*,, 94 U.S. at 573.

In *Permutit*, the inventor Gans had invented an improved water softening device. *Id.* at 53. The device was accurately drawn as a figure in the patent, and if someone skilled in the art were to build the machine faithfully from the drawing, he or she would have been able to obtain the advantages promised by the patent. *Id.* at 58-59. At trial the inventor stated that the reason why his device worked so well was that it had a "free bed," which meant that there was a space above the water softening material (so-called zeolites),which rested on a perforated plate in a vertical tank. *Id.* at 55-56. The hard water would flow downwardly through the zeolites and then through the plate. *Id.* The water flow would agitate or "boil" the zeolites, which improved the softening effect. *Id.* at 56. Prior art softeners employed a "fixed bed," which meant there was a plate directly above the zeolites with no space in between and no room for the zeolites to "boil". *Id.* The patent drawing showed a space above the zeolites, thereby showing that the bed was free and not fixed. *Id.* at 58. But the Court observed that apart from the drawing, the specification made no

mention that the bed was free or ascribed any significance to that fact in the operation or advantages of the device. *Id.* at 59-60. Likewise, the claim made no mention of the free bed and did not distinguish from prior art devices. *Id.* Justice Brandeis, writing for the Court, concluded that Gans' alleged invention was neither described in the specification nor pointed out and particularly claimed in the claims:

> There is no mention in the specification of either a 'free' or a 'locked' zeolite bed; or of the alleged discovery that a rising space above the zeolite bed is necessary for the successful operation of the softener ... Nor does Claim 1 or Claim 5 make mention of a 'free' zeolite bed. Claim 1 is for 'a filter bed consisting of a layer of sand or quartz and a layer of zeolites or hydrated alumino-silicates disposed on the layer of sand or quartz.' Claim 5 for 'a filter bed consisting of a layer of zeolites or alumino-silicates, supporting means for said layer.' *As the patentee has thus failed to give in the specification 'a written description' and has likewise failed particularly to point out and distinctly claim the free zeolite bed, as 'the part, improvement, or combination which he claims as his invention or discovery,' the patent is void.*

Id. at 57-58.

The Court then dismissed the patentee's argument that the drawing of the free bed was sufficient disclosure to render the claims valid:

> The drawing annexed to the specification, it is true, shows a layer of sand or quartz at a point above the zeolites and an unoccupied space between it and the top of the zeolite bed. But there is no suggestion on the drawing or elsewhere that the upper plate bearing the layer of sand or quartz has any purpose except to serve as a mechanical filter through which 'the water to be softened may be first filtered,' or that the unoccupied space has any other purpose than that of similar spaces in sand filters long familiar. *Moreover, while drawings may be referred to for illustration and may be used as an aid in interpreting the specification or claim, they are of no avail where there is an entire absence of description of the alleged invention, or a failure to claim it.* The statute requires the patentee not only to explain the principle of his apparatus and to describe it in such terms that any person skilled in the art to which it appertains may construct and use it after the expiration of the patent, but also to inform the public during the life of the patent of the limits of the monopoly asserted, so that it may be known which features may be safely used or manufactured without a license and which may not. The free bed was

> neither described in the specification nor claimed in either Claim 1 or Claim 5.

Id. at 59-60

The lesson of *Permutit* is that inventors and their attorneys or agents need to figure out *before* the application is written what the invention is. Had that been done and the free bed feature adequately disclosed and claimed, the case may have had a different outcome. A good cross examination of the inventor by his attorney or agent as to why his device worked so well, and why the various aspects of the device were designed the way they were, might well have elicited the significance of the free bed at the critical time, before the application was written and the claims drafted.

In marked contrast to what happened in *Permutit* is the outcome in *Eibel Process v. Minnesota & Ontario Paper*, 261 U.S. 45 (1923), decided eight years earlier. The inventor William Eibel had discovered the source of a problem in papermaking machinery and discovered the solution. *Id.* at 52. The problem itself was well known: at higher speeds the paper on the conveyor belt ("wire") would develop defects, necessitating slowing down the process with attendant loss of productivity. *Id.* Eibel discovered that the defects were in the disturbance and ripples in the stock some 10 feet from the discharge of the highly liquid paper stock onto the wire, and that the disturbance and ripples were caused by the unequal speeds of the stock and wire at that point (i.e., the wire was moving faster than the stock). *Id.* He determined this problem could be rectified by equalizing the speeds. He did this by elevating the wire at the point where the

stock was discharged onto it so that gravity would increase the speed of the stock. *Id.*

After determining that what Eibel had invented included both the discovery of the source of the problem and discovery of the solution, the Court (Chief Justice Taft) found that this invention was expressly disclosed in the specification (*id.* at 65-66) and distinctly and specifically claimed in the claims (*id.* at 70-71). In that case the drawing (Fig. 1) showed the elevation of the wire at the stock discharge point, but unlike the *Permutit* case, the significance of the elevation was explained in the specification and called out in the claims. *Id.* at 65.

In sum this Court's approach in this line of precedent has been simply to ask three questions: (1) what was the invention (inventive concept); (2) was it disclosed in the specification; and (3) was it claimed with particularity and distinctness? Answering no to either of the last two questions renders the claim invalid, either because the specification lacks a written description of the invention that was claimed and/or because the claim itself does not particularly and distinctly point out the invention.

We respectfully submit that this Court would provide an immense service to inventors, the patent bar, the PTO, the courts and most importantly the public by holding in no uncertain terms that the first thing that must be done with regard to drafting, examining or ruling on patent claims is to determine what the invention is, and only after doing that addressing the two questions that respectively compare the invention with the written description and with the claims. To be sure, successfully determining what the invention is is not always easy, but as held by *Merrill* and *General Electric*,

supra, it is nevertheless mandated. Determining what the invention is can be done in various ways and at various times: by meaningful discussions between the inventor and his or her attorney or agent before drafting the application; by PTO examiners who have to understand what was invented and who cannot effectively examine claims without that understanding; and by courts, who may have heard from the inventor or been told what his or her views as to what was invented were.

One clear offshoot of clearer and more distinct claims is that determinations of novelty (§102) and obviousness (§103) will be much easier to make, at the time of drafting, in the PTO, and later in the courts. This Court in *KSR Int'l Co. v. Teleflex, Inc.*, 550 U.S. 398 (2007), reaffirmed that the bar is a high one to establish a nonobvious contribution to the art. It only makes sense that the goals of *KSR* are frustrated by claims that obfuscate rather than point out what the alleged contribution is.

Indeed, the complementary relationship between validity over the prior art and clear and distinct claiming is one not limited to the United States. Amicus notes that initiatives to enforce high standards for patent validity, such as the discouragement of incremental pharmaceutical innovations in India through section 3(d) of its patent law, can be frustrated if claims do not claim the invention.

By the time a patent is in infringement litigation, it should be a straightforward matter to determine what the invention is. Once that determination is done, it should be apparent whether that invention is disclosed in the specification and even more apparent whether it was claimed. Thus the resolution of

whether the invention is described in the specification, and whether the invention is particularly pointed out in the claims, should often be amenable to summary judgment. The realization that these issues can and should be resolvable on summary judgment provides a clear motivation to inventors and their attorneys and agents to cease the practice of drafting ambiguous claims and instead to strive for clarity and distinctness in those claims.

III. APPLICATION OF THE INVENTION-CENTERED APPROACH TO THE PRESENT CASE

We believe on the record as we understand it, application of this Court's methodology to the present case provides an easy answer—the claims fail to particularly point out and distinctly claim what inventor Lekhtman regards as his invention. As seen on page 14 of Petitioner's Brief, Mr. Lekhtman, with full knowledge of the closest prior art, the Fujisaki patent, described what he had invented as "the optimum configuration of the spacing, size, shape and materials" for the electrodes in his device, which he asserted would vary from one application to another. *Id.*; J.A. at 155-56, 158, 175-76. And Respondent itself clarified the significance of the "optimum configuration" reference in its certiorari opposition brief at pp. 16-17 as follows:

> This evidence included statements by the inventor that the design variables to substantially remove the EMG [muscle noise] signals involved the spacing, size, shape, and materials of the electrodes.

To simplify, Lekhtman said that what he invented was achieving equality of muscle noise signals at the two inputs of the differential amplifier in a known heart monitor so that they cancel out – thereby eliminating muscle signal noise from the heartbeat signal – by configuring the spacing, size, shape and materials of the electrodes to equalize the two signals.

With the invention determined, the following two questions of the invention-centered approach are readily answered. Was this invention disclosed in the specification? Absolutely not. There is virtually no reference to the electrodes in the specification, and nothing is said about their parameters and how to adjust those parameters to achieve equality of muscle signals. While the drawings may provide some insight, under *Permutit* that is not enough. It is true that the drawing shows that the electrodes are spaced apart, but they were spaced apart in Fujisaki, and nothing is said in the Lekhtman specification about the special significance of the electrode spacing or of its relationship with size and shape of the electrodes. Moreover, the specification and the drawing say nothing about the electrode material.

Finally was the invention claimed? That question is easily answered too. No. Claim 1 is quite lengthy, but suffice it to say that the claim simply specifies that the live electrode and the common electrode are in "spaced relationship...," which was also true of Fujisaki. Nothing in the specification explains what the spaced relationship is or why it has any significance, and there is nothing in the claim about the electrode's size, shape, or material or the relationship of any of those parameters to

equalization of muscle noise signals. In fact, the eight structural subparagraphs of the claim leading up to the "whereby" clause are a perfect description of Fujisaki. The "whereby" clause then states that this old structure provides a new function or result: equal muscle signals that cancel out in the differential amplifier, but under *Holland Furntiure* and other precedent of this Court discussed above, simply reciting an old structure and attempting to distinguish it by the fact that it provides a function that the prior art did not provide does not comply with the statute. Nothing in this "whereby" clause or anywhere in the claim points out how the old structure achieves this, and specifically nothing in the claim links that equalization to electrode spacing, size, shape and material:

> whereby, a first electromyogram signal will be detected between said first live electrode and said first common electrode, and a second electromyogram signal, *of substantially equal magnitude and phase to said first electromyogram signal* will be detected between said second live electrode and said second common electrode; so that, when said first electromyogram signal is applied to said first terminal and said second electromyogram signal is applied to said second terminal, *the first and second electromyogram signals will be subtracted from each other to produce a substantially zero electromyogram signal* at the output of said difference amplifier;

We agree with the following observation of Petitioner at page 11 of its Brief:

> The patent did not specify whether the muscle signals' magnitude and phase would be equal *because of* the specific configuration of Lekhtman's monitor—such as the placement and size of the various electrodes or how the electrodes are connected—or instead for reasons *unrelated* to the monitor's design (*e.g.*, because muscle signals in a person's hands are always equal due to laws of nature).

We also believe that Respondent's arguments below as to what one of ordinary skill in the art could do in trying to figure out how to get the monitor to work are directed to a different issue, namely, whether the disclosure in the specification is enabling. But as was the case in *Evans v. Eaton*, *supra*, and *General Electric v. Wabash*, *supra*, the requirements that one describe the invention in the specification and claim it particularly and distinctly are separate requirements from enablement. In light of what Lekhtman said he invented, it is plain that neither of the other §112 requirements have been met.

CONCLUSION

For all the foregoing reasons we respectfully urge the Court to reaffirm the invention-centered methodology it applied in a line of precedents from the 1870s to the 1940s as the way to determine whether a specification describes the invention and whether the claims particularly point out and distinctly claim the invention. Such an approach is

fully consonant with the view of Justice Holmes in *The Common Law* (1881):

> The history of what the law has been is necessary to the knowledge of what the law is.

Respectfully submitted.

JUSTIN M. BARNES
Counsel of Record
Fish & Richardson P.C.
12390 El Camino Real
San Diego, CA 92130
(858) 678-5070
barnes@fr.com

Counsel for Amicus

MARCH 2014

AMICUS CURIAE BRIEF

Supreme Court, U.S.
FILED
MAR - 3 2014
OFFICE OF THE CLERK

No. 13-369

RECORD
AND
BRIEFS

IN THE

Supreme Court of the United States

NAUTILUS, INC.,

Petitioner,

v.

BIOSIG INSTRUMENTS, INC.,

Respondent.

ON WRIT OF CERTIORARI TO THE
COURT OF APPEALS FOR THE FEDERAL CIRCUIT

BRIEF OF *AMICI CURIAE* ELECTRONIC FRONTIER FOUNDATION AND PUBLIC KNOWLEDGE IN SUPPORT OF PETITIONER

CHARLES DUAN
PUBLIC KNOWLEDGE
1818 N St. NW, Suite 410
Washington, DC 20036
(202) 861-0020

DANIEL K. NAZER
Counsel of Record
MICHAEL BARCLAY
JULIE P. SAMUELS
ELECTRONIC FRONTIER FOUNDATION
815 Eddy Street
San Francisco, CA 94109
(415) 436-9333
daniel@eff.org

Attorneys for Amici Curiae

251688

COUNSEL PRESS
(800) 274-3321 • (800) 359-6859

Library of Congress
Law Library

TABLE OF CONTENTS

Page

TABLE OF CONTENTS i

TABLE OF CITED AUTHORITIES iii

INTEREST OF *AMICI CURIAE* 1

SUMMARY OF ARGUMENT 2

ARGUMENT 4

I. THE PATENT ACT REQUIRES THAT CLAIMS BE DEFINITE ENOUGH TO PROVIDE CLEAR NOTICE TO THE PUBLIC 4

A. Patent Claims Are Supposed to Give the Public Clear Notice of What Is Covered and What Is Not. 4

B. The Federal Circuit's "Insolubly Ambiguous" Standard Ignores the Court's Precedents, Unfairly Favors Patent Owners, and Disserves the Public Notice Function of Patents 6

II. THE FEDERAL CIRCUIT'S ERRONEOUS TEST HAS LED TO ONGOING DISTORTION AND ABUSE OF THE PATENT SYSTEM 9

A. Claims from Litigated Patents Demonstrate the Danger of Language Intentionally Selected for Ambiguity. 9

Table of Contents

Page

B. Sanctioned Vagueness Has Led to Abusive Business Practices Asserting Patents 15

C. The Lack of Clarity in Patents Has Caused Fundamental Harm to the Patent System.....17

III. Any Test for Claim Definiteness Should Guarantee Sufficient Public Notice.....19

A. Claims Subject to Two Plausible Interpretations Should Be Held Indefinite.....19

B. The Public Should Be Able to Assess the Scope of Patent Claims Without Needing to Resort to Judicial Construction.....22

C. An Appropriately Rigorous Test for Definiteness of Claims Would Not Diminish Patent Owners' Rights.....24

CONCLUSION 30

TABLE OF CITED AUTHORITIES

Page

FEDERAL CASES

Akamai Techs., Inc. v. Limelight Networks, Inc.,
692 F.3d 1301 (Fed. Cir. 2012) (en banc),
cert granted, No. 12-786 26

Ass'n for Molecular Pathology v.
Myriad Genetics, Inc.,
133 S. Ct. 2107 (2013) 28

Beneficial Innovations, Inc. v. Blockdot, Inc.,
2:07-CV-00263-TJW-CE, 2010 WL 2246291
(E.D. Tex. June 3, 2010) 14

Bilski v. Kappos,
130 S. Ct. 3218 (2010) 1

Biosig Instruments, Inc. v. Nautilus, Inc.,
715 F.3d 891 (Fed. Cir. 2013) 6, 14, 22

Brooks v. Fiske,
56 U.S. 212 (1853) 5

Carcieri v. Salazar,
555 U.S. 379 (2009) 21

Datamize, LLC v. Plumtree Software, Inc.,
417 F.3d 1342 (Fed. Cir. 2005) 17

eBay Inc. v. MercExchange, LLC,
547 U.S. 388 (2006) 8

Cited Authorities

Page

Eon-Net LP v. Flagstar Bancorp,
653 F.3d 1314 (Fed. Cir. 2011).....13, 15

Exxon Research & Eng'g Co. v. United States,
265 F.3d 1371 (Fed. Cir. 2001) 6

Festo Corp. v. Shoketsu Kinzoku Kogyo Kabushiki Co.,
535 U.S. 722 (2002).....5, 21

Halliburton Energy Servs., Inc. v. M-I LLC,
514 F.3d 1244 (Fed. Cir. 2008) 6

Interactive Gift Express, Inc. v. Compuserve Inc.,
256 F.3d 1323 (Fed. Cir. 2001) 17

KSR Int'l Co. v. Teleflex, Inc.,
550 U.S. 398 (2007) 8, 28

Lodsys, LLC v. Brother Int'l Corp.,
2:11-CV-00090-JRG, 2013 WL 2949959
(E.D. Tex. June 14, 2013).....14

McClain v. Ortmayer,
141 U.S. 419 (1891) 5

McZeal v. Sprint Nextel Corp.,
501 F.3d 1354 (Fed. Cir. 2007).....23

Medtronic, Inc. v. Mirowski Family Ventures, LLC,
134 S. Ct. 843 (2014).....8, 22

Cited Authorities

Page

Merrill v. Yeomans,
94 U.S. (4 Otto) 568 (1877).....21

Microsoft Corp. v. i4i Ltd. P'ship,
131 S. Ct. 2238 (2011).....1, 7

Precision Instrument Mfg. Co. v. Auto. Maint. Mach. Co.,
324 U.S. 806 (1945).....22

Quanta Computer, Inc. v. LG Elecs. Corp.,
553 U.S. 617 (2008).....1

Radio Corp. of Am. v. Radio Eng'g Labs.,
293 U.S. 1 (1934).....7

Sage Prods., Inc. v. Devon Indus., Inc.,
126 F.3d 1420 (Fed. Cir. 1997).....26

United Carbon Co. v. Binney & Smith Co.,
317 U.S. 228 (1942)..... *passim*

Warner-Jenkinson Co., Inc. v. Hilton Davis Chemical Co.,
520 U.S. 17 (1997).....5

White v. Dunbar,
119 U.S. 47 (1886).....30

Cited Authorities

Page

STATUTES

35 U.S.C. § 112 ..... 5, 15, 29

35 U.S.C. § 112(b) ..... *passim*

35 U.S.C. § 251(a) 29

35 U.S.C. § 257 29

35 U.S.C. § 302 29

Act of July 8, 1870, ch. 230 § 26, 16 Stat. 198 4

America Invents Act of 2011, Pub. L. No 112-29, § 4(c) 125 Stat. 284 (2011) 5

OTHER AUTHORITIES

ABA, *Patent Litigation Strategies Handbook*, (Barry L. Grossman & Gary M. Hoffman eds., 2d ed. 2005) 23

AIPLA, Report of the Economic Survey 2007 (2007) 23

Christa J. Laser, *A Definite Claim On Claim Indefiniteness*, 10 Chi.-Kent J. Intell. Prop. 25 (2010) 18

Cited Authorities

Page

Executive Office of the President, *Patent Assertion and U.S. Innovation* (June 2013) 23-24

Fed. Trade Comm'n, *The Evolving IP Marketplace: Aligning Patent Notice and Remedies with Competition* 85 (2011) 15, 27

FTC Report Recommends Improvements in Patent System to Promote Innovation and Benefit Consumers, Federal Trade Commission (Mar. 7, 2011) 15

James Bessen et al., *The Private and Social Costs of Patent Trolls*, 34 Regulation 26 (2012) 16

Joshua D. Sarnoff, *The Historic and Modern Doctrines of Equivalents and Claiming the Future, Part I*, 87 J. Pat & Trademark Off. Soc'y 371 (2005) 4-5

Kirk M. Hartung, *Claim Construction: Another Matter of Chance and Confusion*, 88 J. Pat. & Trademark Off. Soc'y 831 (2006) 18

Lisa Larrimore Ouellette, *Do Patents Disclose Useful Information?*, 25 Harv. J.L. & Tech. 545 (2012) 17, 18

Mark A. Lemley, *The Myth of the Sole Inventor*, 110 Mich. L. Rev. 709 (2012) 18

Cited Authorities

Page

Michael Risch, *The Failure of Public Notice in Patent Prosecution*, 21 Harv. J.L. & Tech. 179 (2007) 16

Patent Local Rules of the Northern District of California 23

Phil Goldberg, Progressive Policy Inst., *Stumping Patent Trolls on the Bridge to Innovation* (2013) .. 16

Rich Steeves, *New Report Examines the Economic Cost of Patent Trolls* (Oct. 11, 2013) 19

Rob Weir, *How Not to Read a Patent* (Aug. 13, 2009) 18-19

Rules of Practice for Patent Cases before the Eastern District of Texas 23

Tun-Jen Chiang, *Fixing Patent Boundaries*, 108 Mich. L. Rev. 523 (2010) 16

U.S. Patent & Trademark Office, *Manual of Patent Examining Procedure* § 1402 (8th ed. Rev. Aug. 9, 2012) 29

U.S. Patent and Trademark Office, *Supplemental Examination*, Question SE3080 29

U.S. Patent and Trademark Office, *U.S. Patent Statistics Chart, Calendar Years 1963-2013* 23

Page

Webster's Dictionary (Imperial ed. 1864).....20, 21

Webster's New International Dictionary (2d ed. 1948).....20

CONSTITUTIONAL PROVISIONS

U.S. Const. art. 1, § 8, cl. 8.....3

INTEREST OF *AMICI CURIAE*[1]

The Electronic Frontier Foundation ("EFF") is a non-profit civil liberties organization that has worked for more than 20 years to protect consumer interests, innovation, and free expression in the digital world. EFF and its 29,000 active members have a strong interest in helping the courts and policy-makers strike the appropriate balance between intellectual property and the public interest.

Public Knowledge is a non-profit organization that is dedicated to preserving the openness of the Internet and the public's access to knowledge; promoting creativity through balanced intellectual property rights; and upholding and protecting the rights of consumers to use innovative technology lawfully. As part of this mission, Public Knowledge advocates on behalf of the public interest for a balanced patent system, particularly with respect to new and emerging technologies.

Both EFF and Public Knowledge have previously served as amici in key patent cases. *E.g.*, *Microsoft Corp. v. i4i Ltd. P'ship*, 131 S. Ct. 2238 (2011); *Bilski v. Kappos*, 130 S. Ct. 3218 (2010); *Quanta Computer, Inc. v. LG Elecs. Corp.*, 553 U.S. 617 (2008).

---

1. No counsel for a party authored this brief in whole or in part, and no such counsel or party made a monetary contribution intended to fund the preparation or submission of this brief. No person other than the *amici curiae*, or their counsel, made a monetary contribution intended to fund its preparation or submission. Petitioner's counsel consented to this brief's filing in writing on February 18, 2014. Respondent's counsel consented to this brief's filing in writing on February 19, 2014. Websites cited in this brief were last visited on February 26, 2014.

SUMMARY OF ARGUMENT

A developer wishes to build a hotel by a highway, and is searching the records of deeds for a prospective plot of land. The search reveals a recordation of an easement stating in part, "the western boundary is in a *spaced relationship* with the highway."

What can the developer do? "Spaced relationship" could mean a foot from the highway, or a yard, or a mile. The developer could guess at the meaning, but a wrong guess could render the entire investment in building the hotel a waste. Should the case be brought to court, different judges or juries could reasonably disagree on the meaning. Worse yet, when the easement owner sues the developer, the owner will have the benefit of hindsight in making his argument for interpreting the property claim, but the developer has no such benefit when choosing where to build the hotel. The cards are stacked against the developer, a deadweight loss for the hotel business and for the economy at large.

Beyond creating this uncertainty for developers, allowing ambiguous words in property claims would encourage owners of real property to exploit such ambiguities, so that they might later alter or stretch the grant. Rather than providing adequate notice to the public, such deeds would deter the public from improving land for fear of the breadth of such vaguely worded instruments.

Such ambiguous descriptions of the metes and bounds of real property would never be tolerated, but for years the Federal Circuit has tolerated equally ambiguous descriptions of the metes and bounds of patents. Indeed,

the term "spaced relationship," so clearly improper in the hypothetical example above, is the exact term held "definite" by that court in the present case.

Certainly patents differ in many respects from real property, but clarity in the boundaries should not be one such difference. The claims of a patent serve a public notice function, informing others of what may and may not be done. But the Federal Circuit's "insolubly ambiguous" test for indefiniteness of patent claims abrogates this public notice function, permits the proliferation of indeterminate claims, invites abuse by clever patent drafters, and contributes to a general and widespread sense that patents are unclear and uninformative documents. The test thus fails to serve the constitutional mandate that patents "promote the Progress of Science and the useful Arts." U.S. Const. art. 1, § 8, cl. 8.

In practice, the Federal Circuit's test certainly fails the notice function. This brief gives examples from several asserted patents where patent owners deliberately used increasingly vague language to threaten innovative companies. Rather than permit this to go on, the Court should require patent owners to claim their inventions with precision.

Thus, this Court should restore the Patent Act's requirement of particularity and distinctness. Indeed, the Court has already stated the correct test: patent claims must "clearly distinguish what is claimed from what went before in the art and clearly circumscribe what is foreclosed from future enterprise." *United Carbon Co. v. Binney & Smith Co.*, 317 U.S. 228, 236 (1942). Claims that are subject to multiple reasonable interpretations do not

satisfy this standard and should be held invalid. Moreover, to provide effective notice to the public, patents should satisfy this standard *when issued.* Only then will patents provide clear notice of what is covered and what is not; a requirement necessary to promote innovation.

Finally, adopting a more rigorous test will not unduly harm the rights of patent owners, who control their own claim language and can draft clear claims accordingly. Patent owners have several ways to correct issued patents that might be indefinite under a rule that properly enforces § 112(b). The Patent Act provides for reissue, reexamination, continuation, and supplemental examination procedures that can correct any supposed ambiguities in claim language.

ARGUMENT

I. The Patent Act Requires that Claims Be Definite Enough to Provide Clear Notice to the Public.

A. Patent Claims Are Supposed to Give the Public Clear Notice of What Is Covered and What Is Not.

The Patent Act requires that a patent application "shall conclude with one or more claims *particularly pointing out and distinctly claiming* the subject matter which the inventor or a joint inventor regards as the invention." 35 U.S.C. § 112(b) (emphasis added). The requirement of particular and distinct claiming was first adopted in 1870. *See* Act of July 8, 1870, ch. 230 § 26, 16 Stat. 198, 201. The 1870 Patent Act was part of a program to codify then-existing precedent. *See generally* Joshua D. Sarnoff,

The Historic and Modern Doctrines of Equivalents and Claiming the Future, Part I, 87 J. Pat & Trademark Off. Soc'y 371, 400-403 (2005). In particular, the Act codified the shift to peripheral claiming – where the outer scope of a patent is set forth in claim language. *See Brooks v. Fiske*, 56 U.S. 212, 215 (1853) ("The patentee ought to state distinctly what it is for which he claims a patent, and describe the limits of the monopoly."). The requirement of particular and distinct claiming has remained in the Patent Act ever since. *See Warner-Jenkinson Co., Inc. v. Hilton Davis Chemical Co.*, 520 US 17, 26 (1997) (explaining that the Patent Act of 1952 did not materially alter this section).[2]

As the Court has long emphasized, § 112(b) serves a crucial purpose: "The object of the patent law in requiring the patentee to 'particularly point out and distinctly claim the part, improvement or combination which he claims as his invention or discovery' is not only to secure to him all to which he is entitled, but to apprise the public of what is still open to them." *McClain v. Ortmayer*, 141 U.S. 419, 424 (1891). Without such a requirement, ambiguous patent claims would create a "zone of uncertainty which enterprise and experimentation may enter only at the risk of infringement claims" and thereby "discourage invention only a little less than unequivocal foreclosure of the field." *United Carbon Co.*, 317 U.S. at 236. Put simply, a "patent holder should know what he owns, and the public should know what he does not." *Festo Corp. v. Shoketsu Kinzoku Kogyo Kabushiki Co.*, 535 U.S. 722, 730-31 (2002).

---

2. The America Invents Act of 2011 renumbered what had been 35 U.S.C. § 112 ¶2 as 35 U.S.C. § 112(b), but left the statutory text unchanged. *See* Pub. L. No. 112-29, § 4(c), 125 Stat. 284, 296 (2011).

B. The Federal Circuit's "Insolubly Ambiguous" Standard Ignores the Court's Precedents, Unfairly Favors Patent Owners, and Disserves the Public Notice Function of Patents.

The Federal Circuit has abandoned both the plain language of § 112(b) and this Court's long-standing authority requiring clarity in patent claims. The appeals court instead holds that a patent claim is definite unless it is "insolubly ambiguous." *Exxon Research & Eng'g Co. v. United States*, 265 F.3d 1371, 1375 (Fed. Cir. 2001); *see also Biosig Instruments, Inc. v. Nautilus, Inc.*, 715 F.3d 891, 898 (Fed. Cir. 2013). Under this test, a patent claim is valid "if the meaning of the claim is discernible, even though . . . the conclusion may be one over which reasonable persons will disagree." *Exxon Research*, 265 F.3d at 1375. By allowing claims with multiple reasonable interpretations, the Federal Circuit's test expressly tolerates ambiguity. Even worse, the court's doctrine upholds claims that are so obscure that they are almost impossible to interpret. The Federal Circuit requires only that "claims be amenable to construction, *however difficult* that task may be." *Id.* at 1375 (emphasis added).

The Federal Circuit's error is founded on a misapplication of the standard of proof in patent cases. In the decision below, the appeals court suggested that by "embracing this [insolubly ambiguous] standard, 'we accord respect to the statutory presumption of patent validity.'" *Biosig Instruments*, 715 F.3d at 902 (quoting *Exxon Research*, 265 F.3d at 1375); *see also Halliburton Energy Servs., Inc. v. M-I LLC*, 514 F.3d 1244, 1249 (Fed. Cir. 2008) (arguing that indefiniteness "requires such an exacting standard" because an accused infringer must

"show[] by clear and convincing evidence that a skilled artisan could not discern the boundaries of the claim.").

It is correct that patent law requires invalidity defenses be proved by clear and convincing evidence. *See Radio Corp. of Am. v. Radio Eng'g Labs.*, 293 U.S. 1, 2 (1934). Indeed, in *Microsoft Corp. v. i4i Ltd. P'ship*, 131 S. Ct. 2238 (2011), this Court held that the Patent Act of 1952 did not disturb this long-standing rule. But the *evidentiary* standard of proof has no bearing on the *substantive* legal standards for invalidity. Justice Breyer made this point in his *i4i* concurrence:

> [T]he evidentiary standard of proof applies to questions of fact and not to questions of law. ... Where the ultimate question of patent validity turns on the correct answer to legal questions—what these subsidiary legal standards mean or how they apply to the facts as given—today's strict standard of proof has no application.

Id. at 2253 (Breyer, J. concurring). In applying the clear and convincing standard to the substantive legal test for indefiniteness under 35 U.S.C. § 112(b), the Federal Circuit has made precisely this error.

In other areas of the law, it is common knowledge that the standard of proof is unrelated to the substantive facts to be proved. Consider the following analogy. A man commits a homicide. The government criminally prosecutes him for murder and the victim's family civilly sue him for wrongful death. In both cases the government/plaintiffs must prove the same fact – that the defendant committed the homicide. However, the government must do so beyond a reasonable doubt, whereas the family need

only do so by a preponderance of the evidence. The fact that the government has a higher standard of proof doesn't mean (by itself) that the government must prove additional facts as to whether the defendant killed the victim. The underlying *fact* to be proven doesn't change just because the government has a higher standard of proof. Here, the underlying fact to be proven (by clear and convincing evidence) is that a patent claim fails to "particularly point out and distinctly claim" the invention – *not* that the claim merely isn't "insolubly ambiguous."

The Federal Circuit's "insolubly ambiguous" test is part of an unfortunate trend where the appeals court has added detailed and rigid requirements that find no support in the Patent Act. These unsupported doctrines have tended to heavily favor patentees over accused infringers. *See Medtronic, Inc. v. Mirowski Family Ventures, LLC*, 134 S. Ct. 843, 849 (2014) (placing burden of proving non-infringement on declaratory judgment licensee was contrary to "settled case law"); *KSR Int'l Co. v. Teleflex, Inc.*, 550 U.S. 398 (2007) (rejecting the rigid "teaching, suggestion, or motivation" test for non-obviousness); *eBay Inc. v. MercExchange, LLC*, 547 U.S. 388, 391-92 (2006) (finding that "[n]othing in the Patent Act" supported the Federal Circuit's "general rule that courts will issue permanent injunctions against patent infringement absent exceptional circumstances").

The Federal Circuit's "insolubly ambiguous" standard similarly ignores plain statutory language. In effect, the appeals court reads "particularly point out and distinctly claim" out of the Patent Act. This tolerance of vague claims undermines the notice function of patents. It leaves the public unsure of their rights and allows patentees to stretch their patents in abusive and unpredictable ways.

II. The Federal Circuit's Erroneous Test Has Led to Ongoing Distortion and Abuse of the Patent System.

The error of the "insolubly ambiguous" test is no mere theoretical problem; rather it has practical effects that have distorted the patent system, fostered abuse, and hampered innovation. First, this section will consider several examples of actually litigated patents, to see how aggressive patent assertors take advantage of patent ambiguities in a manner detrimental to the public interest and the foundational principles of the patent system. Second, amici will look generally at how vagueness in patent claims generally spurs patent abuse. Finally, the section will observe how, exactly as the Court has feared, the low bar for definiteness has created a "zone of uncertainty" that hinders innovation and dissemination of knowledge.

A. Claims from Litigated Patents Demonstrate the Danger of Language Intentionally Selected for Ambiguity.

Patent owners can and do use ambiguous language to create the perception that their claims cover technologies their disclosure does not support. Consider a claim that is just shy of being "insolubly ambiguous." A court, by definition, can construe the claim by bringing to bear all of its interpretive tools, aided by protracted and expensive legal proceedings. But innovators who seek to learn from the patent, or small businesses facing a demand letter asserting its claims, do not have the benefit of the court's expertise and authority – yet they must still decide how to act, taking into account the patent's ambiguity and the cost of litigation.

Current law therefore allows a broad and problematic gap between patents' perceived scope and their actual legal effect. Patentees can and do exploit this gap by applying for patents with ambiguous language that is open to narrow or broad interpretation. The PTO or the courts may, upon investigation or after concessions by the patentee, know that the language is to be interpreted narrowly. But members of the public lack the court's resources and act at their own risk. Knowing this, patent owners have incentives to draft increasingly ambiguous claims.

This section presents examples of litigated patents where the patentee did exactly that. In the following two examples, the applicant applied for and received continuation patents with increasingly ambiguous language in an apparent effort to broaden their claims' effective scope.

Priceplay.com, Inc.

Patent	Claim Language	Note
6,978,253 Claim 1 Dec 20, 2005	"performance of the buyer while participating in a **Price-Determining-Activity (PDA)**"	Used throughout specification
8,050,982 Claim 1 Nov 1, 2011	"the buyer's . . . participation in a **competitive activity**"	Used twice in specification
8,494,917 Claim 1 Jul 23, 2013	"receiving data from a buyer representing participation in an **intermediary activity**"	Used once in specification

The three patents in this family are generally directed to a system or method of auctioning a product in which the final price is determined in part by the purchaser's performance in an activity. With each continuation, the patents' claims define the scope of that activity more ambiguously. Each successive patent therefore provides the public with less information about its actual coverage.

The earliest-issuing patent, U.S. Pat. No. 6,978,253, uses the term "Price-Determining-Activity (PDA)." This term is used throughout the text of the patent specification, which defines it and gives detailed examples of activities it covers, including video games, simulated stock market bets, and sports wagering. '253 Patent, col. 7, ll. 40–42, 53–54 & 66. Thus, the patent makes clear that the activity is akin to an entertaining game of some sort.

The next-issued patent, U.S. Pat. No. 8,050,982, replaces "Price-Determining-Activity" with "competitive activity . . . collateral to the price." The specification refers to this term only twice, when describing "a competitive/entertaining collateral price-determining activity (PDA)." '982 Patent, col. 1, ll. 65–67; *see also id.* col. 2, ll. 12–16. The specification is unclear as to whether "competitive activity," like "Price-Determining-Activity," encompasses only entertaining activities. Instead, the plain meaning of "competitive activity" could encompass all sorts of activities, such as business negotiations, that are far afield from the games and wagers contemplated by the original patent.

Ambiguity only increases with the most recently issued patent, U.S. Pat. No. 8,494,917, which uses the term "intermediary activity." Its specification uses this

term only once, *see* '917 Patent, col. 2, ll. 25-28, and its scope is undoubtedly more uncertain. While the specification suggests that "intermediary activities" include "electronic competition and/or entertainment," *id.*, the broad term "intermediary" confounds such a direct construction. "Intermediary activity" could be construed to encompass virtually any activity.

This ambiguity may not be "insoluble" by a court, but it certainly serves to confuse the public as to the bounds of Priceplay's patent monopoly. Introducing ambiguity into continuation patents allows patentees to create the appearance that their claims are broader than a court might construe them—here, covering all "intermediary activities" rather than simply games and gambling.

Eon-Net LP

Patent	Claim Language
5,625,465 Claim 1 Apr. 29, 1997	"system for inputting information from a **hard copy document** ... having character recognition capabilities for recognizing at least a portion of alpha/numeric characters appearing on said document"
5,768,416 Claim 1 June 16, 1998	"method of inputting information from a diversity of **hard copy documents**"
6,094,505 Claim 1 Jul. 25, 2000	"parsing a portion of data from a **hard copy document** corresponding to at least one field"
6,683,697 Claim 1 Jan. 27, 2004	"an extraction mode to parse at least a portion of said **document or file** to automatically extract at least one field"

In *Eon-Net LP v. Flagstar Bancorp*, 653 F.3d 1314, 1316 (Fed. Cir. 2011), the patent owner attempted to extend its patent to cover technologies its specification did not support, by introducing ambiguous claim language. Eon-Net owns a family of patents relating to paperless office technology, in which paper documents are scanned into a computer system.

The original patent claims made clear that the technology related to scanning paper documents. The earliest patent in the family, as well as its next two continuations, describe the input as a "hard copy document," a clear term that refers to a paper copy. U.S. Pat. No. 5,265,465; U.S. Pat. No. 5,768,416; U.S. Pat. No. 6,094,505.

But as technologies changed, Eon-Net sought to also cover electronic files. Its next continuation patent, U.S. Pat. No. 6,683,697, uses the term "document or file" instead of "hard copy document." Despite the fact that the '697 Patent's specification refers only to hard copy documents, Eon-Net strenuously argued that the term "document or file" covered electronic content as well, and asserted the patent in litigation based on this argument. *Eon-Net LP*, 653 F.3d at 1321.

After *nine paragraphs* of analysis, the Federal Circuit concluded that the term "document or file" was limited to hard copy documents. *Id.* at 1321-23. Indeed, the Federal Circuit upheld sanctions against Eon-Net for its advocacy of the opposing position, in conjunction with its other litigation misconduct and abusive behavior. *Id.* at 1327-28. Among this abusive behavior was "exploiting the high cost to defend complex litigation to extract a nuisance value settlement" from over a hundred companies. *Id.* at 1327.

If the '697 patent's claims had clearly stated that they covered only systems involving "hard copy documents," Eon-Net's massive campaign of abusive litigation would likely have been prevented. Those hundred companies could have easily read the claims and determined that they did not cover electronic files. But instead, because Eon-Net was allowed to use the ambiguous language "document or file," it was able to persist in its abusive practices, exploiting the high cost of obtaining clarity through judicial claim construction.

Other examples: Lodsys LLC and Beneficial Innovations, Inc.

There are many other examples of patentees using vague claim terms to cover products and services that plainly fall beyond the appropriate scope of the patent. For example, a patent assertion entity called Lodsys LLC owns a patent family relating to fax-era technology. Using hopelessly vague claim terms like "trigger event" and "perception information," Lodsys has argued that its patents cover in-app purchases on all modern smart phones. Citing to the Federal Circuit's decision in this case, the district court upheld Lodsys's vague claim terms as definite. *See Lodsys, LLC v. Brother Int'l Corp.*, 2:11-CV-00090-JRG, 2013 WL 2949959 at *36 (E.D. Tex. June 14, 2013) (citing *Biosig Instruments*, 715 F.3d at 898).

Another patent assertion entity, called Beneficial Innovations, Inc., owns a patent family relating to playing blackjack over a network. It has leveraged vague claim terms like "unrequested" advertising in an attempt to cover essentially all online advertising. *See Beneficial Innovations, Inc. v. Blockdot, Inc.*, 2:07-CV-00263-TJW-CE, 2010 WL 2246291 at *1-3 (E.D. Tex. June 3, 2010).

All of these examples share a common thread of a patent family in which, due to laxity in enforcing claim clarity rules, patent applicants have sought to obtain less clear, more ambiguous patents. The patents use vague and broad language that "unnecessarily require[s] the district court to engage in excessive claim construction analysis." *Eon-Net LP*, 653 F.3d at 1327. This negatively impacts the public because many will "choose to settle early in the litigation rather than expend the resources required to demonstrate to a court that the asserted patents are limited" beyond the possibly broad language. *Id.* To prevent this abuse of the public trust, the Court should demand greater clarity in claim language, by enforcing § 112 where the Federal Circuit has failed to do so.

B. Sanctioned Vagueness Has Led to Abusive Business Practices Asserting Patents.

These examples are not outliers, but rather are indicative of a widespread problem of patent abuse, a problem made possible by lax enforcement of claim definiteness requirements. Stakeholders reported to the Federal Trade Commission that the patent system "generally creates 'an incentive to be as vague and ambiguous as you can with your claims' and to 'defer clarity at all costs.'" Fed. Trade Comm'n, *The Evolving IP Marketplace: Aligning Patent Notice and Remedies with Competition* 85 (2011) ("*Evolving IP*").[3] "Patent applicants have an incentive to keep issued patent claims

---

3. *Available at*, http://www.ftc.gov/os/2011/03/110307patentreport.pdf. *See also* FTC Report Recommends Improvements in Patent System to Promote Innovation and Benefit Consumers, Federal Trade Commission (Mar. 7, 2011), *available at*, http://www.ftc.gov/opa/2011/03/patentreport.shtm.

vague because vagueness allows for ex post gaming." Michael Risch, *The Failure of Public Notice in Patent Prosecution*, 21 Harv. J.L. & Tech. 179, 180 (2007). One economist traced how patents with "fuzzy boundaries" have created "a business opportunity based on acquiring patents that can be read to cover existing technologies and asserting those patents." James Bessen et al., *The Private and Social Costs of Patent Trolls*, 34 Regulation 26, 34 (2012). In this way, ambiguous patents—mostly relating to software—have fed the recent explosion in litigation by non-practicing entities (also known as patent trolls).

Importantly, ambiguous patents give rise to abusive patent litigation because the harms of ambiguity fall almost unilaterally on accused infringers, who "disproportionately" bear the "risks and harms resulting from ambiguous patents." Phil Goldberg, Progressive Policy Inst., *Stumping Patent Trolls on the Bridge to Innovation* 4 (2013).[4] For one thing, the patent assertors can exploit the benefit of hindsight: the product manufacturer must guess at all the possible meanings of a patent claim before manufacturing a product in order to avoid infringement, while the patent owner can tailor a favored interpretation after the fact, after seeing the manufactured product. *See* Tun-Jen Chiang, *Fixing Patent Boundaries*, 108 Mich. L. Rev. 523, 573 (2010).

Also, the "insolubly ambiguous" standard unfairly prevents parties from fully presenting their cases in litigation, by forcing them to choose between arguing

4. *Available at*, http://www.progressivepolicy.org/wp-content/uploads/2013/09/10.2013-Goldberg_Stumping-Patent-Trolls-On-The-Bridge-To-Innovation.pdf

for a claim construction and arguing for indefiniteness. Under the Federal Circuit standard, a claim is indefinite only when it is "not amenable to construction." *Datamize, LLC v. Plumtree Software, Inc.*, 417 F.3d 1342, 1347 (Fed. Cir. 2005). Arguing in favor of a particular claim construction undermines any argument that the claim cannot be construed. But *failing* to argue for a claim construction will waive that position on appeal. *Interactive Gift Express, Inc. v. Compuserve Inc.*, 256 F.3d 1323, 1346-47 (Fed. Cir. 2001). This Hobson's choice complicates accused infringers' ability to defend their cases, creating an unjustified unfairness that accrues to the benefit of patent owners.

C. The Lack of Clarity in Patents Has Caused Fundamental Harm to the Patent System.

This Court has demanded definiteness in claims to avoid a "zone of uncertainty" that would result from indefiniteness. *United Carbon Co.*, 317 U.S. at 236. Unfortunately, due to the Federal Circuit's standard, this hypothetical zone of uncertainty has become a stark reality.

One survey of researchers in the nanotechnology field found numerous complaints on the usefulness of patents as technical disclosures. Lisa Larrimore Ouellette, *Do Patents Disclose Useful Information?*, 25 Harv. J.L. & Tech. 545 (2012). Among the surveyed researchers, 36% never read patents, many of them complaining about "the style in which patents are written—patents were called 'vague,' 'legal jargon,' 'incomprehensible,' and lacking 'technical detail.'" *Id.* at 572. Those who had read patents had similar complaints: "To a scientist,"

an academic chemist wrote, "the patent literature looks like an invention of lawyers for the benefit of other patent lawyers." *Id.* at 577. Only 38% of surveyed researchers believed that one could reproduce an invention from the patent specification—a clear indication that disclosure and dissemination of knowledge, the cornerstone goals of the patent system, are not being served. *Id.*

Academics, scholars, and practitioners have echoed the same concerns that patents are unreadably vague. As one commentator observed, "the Federal Circuit has permitted a number of vague general disclosures that don't actually communicate very much to anyone, and patent lawyers often have incentives to write such vague disclosures." Mark A. Lemley, *The Myth of the Sole Inventor*, 110 Mich. L. Rev. 709, 745 (2012); *see also* Christa J. Laser, *A Definite Claim On Claim Indefiniteness*, 10 Chi.-Kent J. Intell. Prop. 25, 27 (2010) ("If the Federal Circuit does not correct this trend soon, a competitor's ability to accurately determine the metes and bounds of current patents might deteriorate further."); Kirk M. Hartung, *Claim Construction: Another Matter of Chance and Confusion*, 88 J. Pat. & Trademark Off. Soc'y 831, 844 (2006) ("[I]f reasonable people can disagree about the definition of the claim terms, how does this notify the public of the patentee's right to exclude?")

Those outside of academic circles have expressed the most concern about the difficulty of understanding patents and particularly patent claims. One author, in describing how to read patent claims, laments that they are "a dense form of legal English," further explaining that the "drafting of patent claims is a black art" because claims are "full of magic words." Rob Weir, *How Not to*

Read a Patent (Aug. 13, 2009).[5] "Patents are so vague," one attorney said, that "[i]f someone claims infringement, the only way to resolve it is through litigating." Rich Steeves, *New Report Examines the Economic Cost of Patent Trolls* (Oct. 11, 2013).[6] Where litigation is "the only way" to assess the meaning of a patent, that patent has failed to serve its public notice function.

III. Any Test for Claim Definiteness Should Guarantee Sufficient Public Notice.

A. Claims Subject to Two Plausible Interpretations Should Be Held Indefinite.

Section 112(b) of the Patent Act requires that patent claims be clear and unambiguous: "The specification shall conclude with one or more claims particularly pointing out and distinctly claiming the subject matter which the inventor or joint inventor regards as the invention." A patent claim should therefore allow the public to know, at the time the patent issues, what is and what is not covered. This is the only way the claim enables the public to understand "the subject matter" the patentee claims as "the invention."

The statutory language mandates this precision. Dictionaries from the years prior to 1952 and 1870 confirm that the key words of the Patent Act had consistent and clear meaning at the relevant times:

---

5. *Available at*, http://www.robweir.com/blog/2009/08/how-not-to-readpatent.html

6. *Available at*, http://www.insidecounsel.com/2013/10/11/new-report-examines-the-economic-cost-of-patent-tr

Particular: "1. Relating to a portion of anything; separate; sole; single; individual; specific . . . 2. Of or pertaining to a single person, class, or thing; not general; not common . . . ." *Webster's New International Dictionary* 1783 (2d ed. 1948).

Particularly: "1. In detail or in particulars; item by item, or part by part. . . . 3. In a particular manner; expressly." *Id.* at 1783.

Particular: "1. Pertaining to a single person or thing; not general; as, this remark has a *particular* application. 2. Individual; noting or designating a single thing by way of distinction. . . ." *Webster's Dictionary* 800 (Imperial ed. 1864).

Particularly: "Distinctly; singly." *Id.* at 801.

Distinct: "1. Distinguished; discriminated by a visible sign; marked out. 2. Distinguished by nature or station; not the same; separate; individual . . . 3. That may be clearly seen or discerned; clear; plain; well-defined . . . ." *Webster's New International Dictionary* 755-56 (2d ed. 1948)

Distinctly: "1. Separately. 2. With distinctness; not confusedly; without blending of one thing with another; hence, clearly; obviously." *Id.* at 756.

Distinct: "So separated as not to be confounded with any other thing; . . . not confused." *Webster's Dictionary* 354 (Imperial ed. 1864).

> **Distinctly:** "Separately; with distinctness; not confusedly; without the blending of one part or thing with another; as a proposition *distinctly* understood; a figure *distinctly* defined." *Id.* at 353 .

The plain meaning of 'particularly' and 'distinctly' requires that the applicant provide *clear and unambiguous* claim language describing the scope of his or her invention. *Cf. Carcieri v. Salazar*, 555 U.S. 379, 387 (2009) (where the statutory text is plain it should be interpreted according to its terms). This means that a claim subject to multiple reasonable interpretations—which is *necessarily* an ambiguous claim—does *not* satisfy the statutory requirement of particularity and distinctness. The Patent Act "leave[s] no excuse for ambiguous language or vague descriptions." *Merrill v. Yeomans*, 94 U.S. (4 Otto) 568, 573 (1877).

This Court outlined the correct standard in *United Carbon Co.*, 317 U.S. at 236:

> The statutory requirement of particularity and distinctness in claims is met only when they clearly distinguish what is claimed from what went before in the art and clearly circumscribe what is foreclosed from future enterprise.

This standard is faithful to both the language and purpose of the Patent Act. By informing the public of what is and what is not covered a clear patent claim helps competitors make the right decisions about whether to seek a license or design around a patent. *Festo Corp.*, 535 U.S. at 730-31 ("This clarity is essential to promote progress, because it enables efficient investment in innovation.").

Precise claims also allow courts, and the public, to more effectively evaluate the validity of patents. *United Carbon Co.*, 317 U.S. at 236 (Patent "claims must be reasonably clearcut to enable courts to determine whether novelty and invention are genuine.").

Ultimately, clear and unambiguous patent claims serve the public interest by ensuring that patents are kept within their legitimate scope. *See Medtronic*, 134 S. Ct. at 851 (The public "has a 'paramount interest in seeing that patent monopolies . . . are kept within their legitimate scope.'") (quoting *Precision Instrument Mfg. Co. v. Auto. Maint. Mach. Co.*, 324 U.S. 806, 816 (1945)).

B. The Public Should Be Able to Assess the Scope of Patent Claims Without Needing to Resort to Judicial Construction.

Before a patent can be declared indefinite under the Federal Circuit's test, the patent must go through formal claim construction proceedings. *Biosig Instruments*, 715 F.3d at 891 ("A claim is indefinite only when it is 'not amenable to construction' or 'insolubly ambiguous.'"); *see also id.* at 896-97 (before holding the claims indefinite, the district court conducted a *Markman* hearing, issued a claim construction order, and then heard summary judgment motions), *id.* at 905 (concurring opinion of Judge Schall, noting that Biosig's claims were "amenable to construction").

Such extended proceedings – claim construction hearings, rulings, and then summary judgment proceedings – are time consuming and costly. In district courts, claim meaning is often resolved at a formal,

expensive claims construction proceeding with expert testimony and extensive attorney argument. ABA, *Patent Litigation Strategies Handbook*, 742-43, 746 n.226 (Barry L. Grossman & Gary M. Hoffman eds., 2d ed. 2005). These hearings often take place "near, or after, the close of discovery." *Id.* at 749. In a typical patent case, the median cost of litigating through the close of discovery is between $350,000 and $3 million. *See McZeal v. Sprint Nextel Corp.*, 501 F.3d 1354, 1362 (Fed. Cir. 2007) (citing AIPLA, Report of the Economic Survey 2007, at 35 (2007)). Many of the district courts – especially the ones that hear the most patent cases – have extensive rules for claim construction proceedings.[7] Under those rules, claim construction takes up to a year or longer to complete and requires detailed (and costly) disclosures of invalidity and infringement contentions, *in addition* to disclosure, briefing, and hearings about the parties' actual claim construction positions.

Given how expensive this is, it is not surprising that claim construction only happens to a small subset of issued patents. For example, in 2012 the U.S. PTO issued about 276,000 patents. U.S. Patent and Trademark Office, *U.S. Patent Statistics Chart, Calendar Years 1963-2013*.[8] However, there were only about 4,800 patent suits filed in 2012. Executive Office of the President, *Patent*

---

7. *See, e.g.*, Patent Local Rules of the Northern District of California, *available at*, http://www.cand.uscourts.gov/localrules/patent; Rules of Practice for Patent Cases before the Eastern District of Texas, *available at*, http://www.txed.uscourts.gov/cgi-bin/view_document.cgi?document=1179&download=true

8. *Available at*, http://www.uspto.gov/web/offices/ac/ido/oeip/taf/us_stat.htm

Assertion and U.S. Innovation 5 (June 2013).[9] This means that (roughly) only about two percent of all patents are litigated, and since not all lawsuits proceed through claim construction proceedings, only a far smaller percentage of patents will be construed by a court.

If the public cannot assess the scope of a patent until after claim construction costing millions of dollars and taking a year or longer – even assuming that the patent is one of the small percentage that went through claim construction – then patents are not satisfying the notice requirements discussed above. To remedy this, claims must be subject to only one reasonable interpretation *when issued*, and the legal standard for indefiniteness should require such clarity.

C. An Appropriately Rigorous Test for Definiteness of Claims Would Not Diminish Patent Owners' Rights.

The Federal Circuit often justifies its test by saying it is necessary to protect patent owners. But a rigorous definiteness test would still protect patent owners' rights. Claims can easily be drafted unambiguously, with only one reasonable interpretation.

1. Precise Claim Drafting, Not Ambiguous Patents, Is the Best Way to Protect Both Patent Owners and Third Parties

In this case, the indefinite nature of Biosig's patent claims is a problem of Biosig's own making (as it is for

9. *Available at*, http://www.whitehouse.gov/sites/default/files/docs/patent_report.pdf

other patentees who deliberately write vague claims). Biosig (and other patentees) have ignored the mandate of § 112(b) that claims be definite and give clear notice to the public and third parties.

It would be straightforward to rewrite most claims to avoid indefiniteness. For example, Biosig's claims could easily be redrafted to be clear (additions to the actual claim language are underlined, deletions are in strikethrough):

> a first live electrode and a first common electrode mounted on said first half ~~in spaced relationship with each other~~ spaced at a distance great enough to prevent a short circuit between the electrodes, and less than the width of a human hand

This change would have avoided the lack of public notice that the ambiguous, issued claims suffer. True, the redrafted claims might be anticipated or obvious in view of U.S. Patent No. 4,444,200 to Fujisaki (the "inner and outer cylindrical electrodes 21 and 22 are arranged in axially aligned relationship and electrically insulated from each other", col. 2, lines 57-60). (The parties discussed this potential validity challenge at length in their certiorari petition briefs.) But a party should not be permitted to draft indefinite claims to save the patent from anticipation or obviousness.

As another example, let's return to the "easement" analogy in the introduction. Instead of an easement where "the western boundary is in a spaced relationship with the highway," the easement could instead easily

have been written as of a certain specified width (in feet), or at least as a "western boundary far enough away from the highway to accommodate standard power and communication lines."

2. The Public and Third Parties Should Not Bear the Risk of Indefinite Claims

The burden should be on the patentees to write clear claims, not on third parties who bear the risk of indefinite claims that don't provide adequate notice. As the lower court once stated:

> [A]s between the patentee who had a clear opportunity to negotiate broader claims but did not do so, and the public at large, it is the patentee who must bear the cost of its failure to seek protection for this foreseeable alteration of its claimed structure.

Sage Prods., Inc. v. Devon Indus., Inc., 126 F.3d 1420, 1425 (Fed. Cir. 1997); *see also Akamai Techs., Inc. v. Limelight Networks, Inc.*, 692 F.3d 1301, 1349-50 (Fed. Cir. 2012) (en banc) (Linn, J., dissenting) ("[T]he claim drafter is the least cost avoider of the problem of unenforceable patents due to joint infringement, and this court is unwise to overrule decades of precedent in an attempt to enforce poorly-drafted patents."), *cert. granted*, No. 12-786.

This rule is rooted in principles of fairness and economics. The patent applicant – who presumably knows what he or she has invented – is in the best position to provide clarity about the patent claims at the outset.

This is consistent with the notice requirements of claims discussed above.

By comparison, unsuspecting third party infringers are not in a position to provide such clarity, because indefinite claims do not provide adequate notice to the public. For example, the FTC states that little clarity exists in claim language typically used in software patents. As a result, many in the information technology sector have admitted to "frequently" not performing clearance searches and even simply ignoring patents. *Evolving IP* at 80 ("the notice function 'is not well served at all'"), *id.* at 83 (noting a "fundamentally poor fit" between claim language and software-related patents). If patent claims are so indefinite that the public cannot even perform a search to try to find patents that might affect one's business, then the public notice function has failed its purpose.

Imposing ex post facto liability on infringing parties because of indefinite claims opens them up to risks they neither intended to take nor could have anticipated. Such imposition of liability would remove the burden from the party best-positioned to bear it (the patent owner, by drafting unambiguous claims in the first place) and impermissibly shifts it to a third party in the worst position to bear it.

3. The Court Should Ignore any Argument of Settled Expectations

Biosig or its amici might argue that changing the indefiniteness standard would call into question the patentability of potentially millions of patents that were drafted under the Federal Circuit's rule. In essence, they

would argue that since patent attorneys drafted patent claims that were (often deliberately) ambiguous but nevertheless were valid under the Federal Circuit's rule, it would disrupt settled expectations of such attorneys and their inventor clients to change the rule now.

The Court should reject any such arguments, and fix the lower court's incorrect rule. Indeed, it has done so in the past, when the Court rejected arguments that long-standing practices should be deferred to because the inventive community had allegedly relied on them. *See Ass'n for Molecular Pathology v. Myriad Genetics, Inc.*, 133 S. Ct. 2107, 2118-19 (2013) (rejecting deference to the PTO's long-standing rule allowing gene patenting); Brief for the Respondents at 14-17, *KSR Int'l Co. v. Teleflex, Inc.*, 550 U.S. 398 (2007) (No. 04-1350)[10] (respondent argued that the Federal Circuit's obviousness standard should not be changed, because "millions of patents have been issued in reliance on the suggestion test, each of which would become susceptible to *post hoc* litigation in federal district courts around the nation if this Court were to call that standard into question.").

4. Patent Owners Can Correct any Deficiencies in Issued Patents

In any event, patent owners have several ways to correct issued patents that might be indefinite under a rule that properly enforces § 112(b). The Patent Act provides for reissue, reexamination, continuation, and supplemental examination procedures that can correct any supposed ambiguities in claim language.

---

10. *Available at*, http://www.scotusblog.com/movabletype/archives/KSR%20FINAL.pdf

The reissue statute allows a patent owner to ask the PTO to reissue a patent that is "wholly or partly inoperative or invalid . . . by reason of the patentee claiming more or less than he had a right to claim . . . ." 35 U.S.C. § 251(a). The PTO's regulations permit filing a reissue application if "the claims are too narrow or too broad." *See* U.S. Patent & Trademark Office, *Manual of Patent Examining Procedure* § 1402 (8th ed. Rev. Aug. 9, 2012).[11] This would encompass patent claims that are indefinite and thus (usually) overbroad.

A patent owner may also correct § 112(b) defects using the new supplemental examination procedure of the America Invents Act, 35 U.S.C. § 257. *See* U.S. Patent and Trademark Office, *Supplemental Examination*, Question SE3080[12] (noting that § 112 issues may be considered). Also, in some cases a patent could instead be reexamined, under 35 U.S.C. § 302. Finally, instead of the abuse of the continuation process described in Section II.A. above, patent owners should instead be incentivized to use continuations to make their claims particular and distinct.

Thus, if this Court's decision correctly applying § 112(b) results in some existing patents having indefiniteness issues, patent owners have several ways to correct any such defects – and at the same time put the public on notice of what they actually invented.

---

11. *Available at*, http://www.uspto.gov/web/offices/pac/mpep/s1402.html

12. *Available at*, http://www.uspto.gov/aia_implementation/faqs-supplemental-exam.jsp

CONCLUSION

This Court long has warned against claims that "like a nose of wax . . . may be turned and twisted in any direction." *White v. Dunbar*, 119 U.S. 47, 51 (1886). The Federal Circuit's "insolubly ambiguous" rule permits the very abuse that the Court warned against over a century ago. Since the term "spaced relationship" is indefinite under a proper interpretation of § 112(b), the lower court's judgment of validity should be reversed.

Dated: March 3, 2014.

Respectfully submitted,

CHARLES DUAN
PUBLIC KNOWLEDGE
1818 N St. NW, Suite 410
Washington, DC 20036
(202) 861-0020

DANIEL K. NAZER
Counsel of Record
MICHAEL BARCLAY
JULIE P. SAMUELS
ELECTRONIC FRONTIER FOUNDATION
815 Eddy Street
San Francisco, CA 94109
(415) 436-9333
daniel@eff.org

Attorneys for Amici Curiae

AMICUS CURIAE BRIEF

RECORD AND BRIEFS

No. 13-369

Supreme Court, U.S.
FILED
MAR - 3 2014
OFFICE OF THE CLERK

IN THE

Supreme Court of the United States

NAUTILUS, INC.,

Petitioner,

v

BIOSIG INSTRUMENTS, INC.,

Respondent.

On Writ of Certiorari to the United States Court of Appeals for the Federal Circuit

BRIEF OF THE INTELLECTUAL PROPERTY LAW ASSOCIATION OF CHICAGO AS AMICUS CURIAE IN SUPPORT OF NEITHER PARTY

JEFFREY B. BURGAN*
L. SCOTT BEALL
LEYDIG, VOIT & MAYER, LTD.
TWO PRUDENTIAL PLAZA
180 N. STETSON AVE.
SUITE 4900
CHICAGO, IL 60601
(312) 616-5600
JBURGAN@LEYDIG.COM

BRENT A. HAWKINS,
PRESIDENT
THE INTELLECTUAL
PROPERTY LAW
ASSOCIATION OF CHICAGO
P.O. BOX 472
CHICAGO, IL 60690
(312) 984-7764

March 3, 2014

* Counsel of Record

Library of Congress
Law Library

TABLE OF CONTENTS

Page

TABLE OF AUTHORITIES II

INTEREST OF AMICUS CURIAE 1

SUMMARY OF THE ARGUMENT 2

I. ARGUMENT 6

A. THE PATENT STATUTE CALLS FOR CLARITY 6

B. THE SUPREME COURT ALSO DEMANDS CLARITY 9

C. THE RECENT FEDERAL CIRCUIT VIEW RUNS COUNTER TO THE CLARITY DEMANDED BY THE PATENT STATUTE AND THIS COURT 13

D. A SINGLE STANDARD IS REQUIRED TO ENABLE A CONSCIENTIOUS PATENT LAWYER TO DETERMINE INDEFINITENESS 16

E. THE FEDERAL CIRCUIT HAS INCONSISTENTLY ARTICULATED WHETHER INDEFINITENESS DETERMINATIONS UNDER 35 U.S.C. § 112, ¶ 2, ARE WHOLLY A QUESTION OF LAW OR A MIXED QUESTION OF LAW AND FACT 19

CONCLUSION 23

TABLE OF AUTHORITIES

Cases

Biosig Instruments, Inc. v. Nautilus, Inc.,
715 F.3d 891 (Fed. Cir. 2013) cert. granted, 134 S. Ct. 896 (2014) 18

BJ Servs. Co. v. Halliburton Energy Servs., Inc.,
338 F.3d 1368 (Fed. Cir. 2003) 21

Carnegie Steel Co. v. Cambria Iron Co.,
185 U.S. 403 (1902) 11

Cybor Corp. v. FAS Techs., Inc.,
138 F.3d 1448 (Fed. Cir. 1998) (*en banc*) 20

Datamize, LLC v. Plumtree Software, Inc.,
417 F.3d 1342 (Fed. Cir. 2005) 4, 13, 16, 19

Diamond v. Diehr,
450 U.S. 175 (1981) 17

Dow Chem. Co. v. NOVA Chemicals Corp. (Canada),
629 F. Supp. 2d 397 (D. Del. 2009) 21

Energizer Holdings, Inc. v. Int'l Trade Com'n,
435 F.3d 1366 (Fed. Cir. 2006) 16

Enzo Biochem, Inc. v. Applera Corp.,
599 F.3d 1325 (Fed. Cir. 2010) 16

Enzo Biochem, Inc. v. Applera Corp.,
605 F.3d 1347 (Fed. Cir. 2010) 13, 14, 15, 22, 23

Ernie Ball, Inc. v. Earvana, LLC,
502 Fed. Appx. 971 (Fed. Cir. 2013) 5

Evans v. Eaton,
20 U.S. (7 Wheat.) 356 (1822) 7

Ex parte Miyazaki,
89 U.S.P.Q.2d 1207 (Bd. Pat. App. & Interf., Nov. 19, 2008) 15

Exxon Research & Eng'g Co. v. United States,
265 F.3d 1371 (Fed. Cir. 2001) 4, 13, 16

Festo Corp. v. Shoketsu Kinzoku Kogyo Kabushiki Co., Ltd.,
535 U.S. 722 (2002) 4, 9, 11, 17, 22

Green Edge Enterprises, LLC v. Rubber Mulch Etc., LLC,
620 F.3d 1287 (Fed. Cir. 2010) 21

Halliburton Energy Servs. Inc. v. M-I LLC,
514 F.3d 1244 (Fed. Cir. 2008) 16

Keystone Bridge Co. v. Phoenix Iron Co.,
95 U.S. 274 (1877) 8

Lighting Ballast Control LLC v. Philips Electronics N. Am. Corp.,
No. 2012-1014, 2014 WL 667499 (Fed. Cir. Feb. 21, 2014) (*en banc*) 5, 19, 20

Markman v. Westview Instruments, Inc.,
517 U.S. 370 (1996) 3, 7, 11

Markman v. Westview Instruments, Inc.,
52 F.3d 967 (Fed. Cir. 1995) (*en banc*), *aff'd*, 517 U.S. 370 (1996) 9, 20

Merrill v. Yeomans,
94 U.S. 568 (1876) 4, 7

Microsoft Corp. v. i4i Ltd. P'ship,
131 S. Ct. 2238 (2011) 20

Minerals Separation, Ltd. v. Hyde,
242 U.S. 261 (1916) 10

Morton Int'l, Inc. v. Cardinal Chem. Co.,
5 F.3d 1464 (Fed. Cir. 1993) 6, 18, 24

Motion Picture Patents Co. v. Universal Film Mfg. Co.,
243 U.S. 502 (1917) 6

Noah Systems, Inc. v. Intuit Inc.,
675 F.3d 1302 (Fed. Cir. 2012) 16

Phillips v. AWH Corp.,
415 F.3d 1303 (Fed. Cir. 2005) (*en banc*) 20

Providence Rubber Co. v. Goodyear,
76 U.S. (9 Wall.) 788 (1869) 10

Pullman-Standard v. Swint,
456 U.S. 273 (1982) 19

Retractable Techs., Inc. v. Becton, Dickinson & Co.,
659 F.3d 1369 (Fed. Cir. 2011) 20

Sys. Mgmt. Arts Inc. v. Avesta Technologies, Inc.,
137 F. Supp. 2d 382 (S.D.N.Y. 2001) 21

United Carbon Co. v. Binney & Smith Co.,
317 U.S. 228 (1942) 3, 7

United States v. U.S. Gypsum Co.,
333 U.S. 364 (1948) 19

Young v. Lumenis, Inc.,
492 F.3d 1336 (Fed. Cir. 2007) 19, 21

Statutes

35 U.S.C. § 112 ..... 2, 3, 6, 7, 9, 15, 17, 18, 20, 22, 23

35 U.S.C. § 154 6

35 U.S.C. § 282(a) 4, 13, 17, 18, 20, 24

Other Authorities

Edward D. Manzo, PATENT CLAIM CONSTRUCTION IN THE FEDERAL CIRCUIT (2013) 2, 4

Edward D. Manzo, PATENT CLAIM CONSTRUCTION IN THE FEDERAL CIRCUIT, (forthcoming 2014) (manuscript at 12) (on file with Thomson Reuters Westlaw).....12

Supplementary Examination Guidelines for Determining Compliance With 35 U.S.C. 112 and for Treatment of Related Issues in Patent Applications, 76 Fed. Reg. 7162 (2011).....15

Rules

Fed. R. Civ. P. 52(a)(6) 19

Constitutions

U.S. Const., Art. I, § 8, cl. 8 8

INTEREST OF AMICUS CURIAE

The Intellectual Property Law Association of Chicago ("IPLAC") submits this brief as amicus curiae in support of neither party on the ultimate merits of the case.[1,2,3]

Founded in 1884, the Intellectual Property Law Association of Chicago is a voluntary bar association of over 1,000 members who practice in the areas of patents, trademarks, copyrights, trade secrets. IPLAC is the country's oldest bar association devoted exclusively to intellectual property matters. In litigation, IPLAC's members are split about equally between plaintiffs and

---

1 Pursuant to Supreme Court Rule 37.6, no counsel for a party authored this brief in whole or in any part, no such counsel or a party made a monetary contribution intended to fund the preparation or submission of the brief, and no person other than the amicus curiae, its members, or its counsel, made such a monetary contribution.

2 In addition to the required statement of footnote 1, IPLAC adds that after reasonable investigation, IPLAC believes that (a) no member of its Board or Amicus Committee who voted to prepare this brief, or any attorney in the law firm or corporation of such a member, represents a party to this litigation in this matter, (b) no representative of any party to this litigation participated in the authorship of this brief, and (c) no one other than IPLAC, or its members who authored this brief and their law firms or employers, made a monetary contribution to the preparation or submission of this brief.

3 Pursuant to Supreme Court Rule 37.2, counsel of record received timely notice of the intent to file this brief under the Rule and consent was granted.

defendants. Its members include attorneys in private and corporate practices before federal bars throughout the United States, and the U.S. Patent and Trademark Office ("USPTO" or "Patent Office"), and the U.S. Copyright Office. As part of its central objectives, IPLAC is dedicated to aiding the development of intellectual property law, especially in the federal courts.[4]

IPLAC is the source of Manzo, ed., *Patent Claim Construction in the Federal Circuit*, published in annual editions by Thomson Reuters Westlaw, including the current 2013 edition. This book of the IPLAC Litigation Committee reviews the law of precedential and non-precedential Federal Circuit claim interpretation cases each (calendar) year.

SUMMARY OF THE ARGUMENT

The state of the patent law on definiteness too often leaves lawyers and patent owners unable to tell with any degree of certitude what the standard is to determine whether a given patent claim (in an issued patent) is compliant with 35 U.S.C. § 112, ¶ 2.[5] Articulations by the Federal Circuit of the standard have varied and appear to be inconsistent

---

[4] While over 30 federal judges are honorary members of IPLAC, none of them was consulted or participated in any way regarding this brief.

[5] Paragraph 2 of 35 U.S.C. § 112 was replaced with the redesignated § 112(b) by the Leahy-Smith America Invents Act, Pub. L. No. 112-29, § 4(c), 125 Stat. 284, 296 (2011). Cites in this brief are to the pre-AIA version of the provision that was applied below.

with the standard announced by this Court. The Federal Circuit has repeatedly asserted a *de novo* standard of review although indefiniteness, while ultimately an issue of law, is predicated on factual underpinnings which, IPLAC respectfully submits, should be reviewed under the "clearly erroneous" standard.

The patent statute dictates that a patent "specification shall conclude with one or more claims particularly pointing out and distinctly claiming the subject matter which the applicant regards as his invention." 35 U.S.C. § 112, ¶ 2. (35 U.S.C. § 112 (b)). The statute does not dictate *how* the inventor must claim, and it leaves considerable discretion to the inventor. The Patent Office has prescribed various regulations that concern the form of patent claims, such as the requirement that each claim be restricted to a single sentence, but inventors and their counsel are left to draft patent claims in various unrestricted ways. Regardless how the claim is written, this statutory requirement must be followed.

This Court's jurisprudence recognizes that "[i]t has long been understood that a patent must describe the exact scope of an invention." *Markman v. Westview Instruments, Inc.*, 517 U.S. 370, 373 (1996). Well before *Markman*, the definiteness requirement was interpreted as met "only when [patent claims] clearly distinguish what is claimed from what went before in the art and clearly circumscribe what is foreclosed from future enterprise." *United Carbon Co. v. Binney & Smith Co.*, 317 U.S. 228, 236 (1942). "The patent law, and . . . the principles which govern the exclusive rights

conferred by it, leave no excuse for ambiguous language or vague descriptions." *See Merrill v. Yeomans*, 94 U.S. 568, 573 (1876). However, in patent litigation, this Court acknowledges the limitations of language and that "the nature of language makes it impossible to capture the essence of a thing in a patent application." *Festo Corp. v. Shoketsu Kinzoku Kogyo Kabushiki Co., Ltd.*, 535 U.S. 722, 731 (2002).

At least since 2001, under the rubric of the presumption of validity found in the Patent Act, as codified in U.S.C. § 282(a), the Federal Circuit has moved away from the above standard. Instead, the Federal Circuit has held that "only claims 'not amenable to construction' or 'insolubly ambiguous' are indefinite." *Datamize, LLC v. Plumtree Software, Inc.*, 417 F.3d 1342, 1347 (Fed. Cir. 2005). The Federal Circuit takes the position that "the definiteness of claim terms depends on whether those terms can be given *any reasonable meaning*," *Id.* at 1347 (emphasis added), "even though the task may be formidable and the conclusion may be one over which reasonable persons will disagree." *Exxon Research & Eng'g Co. v. United States*, 265 F.3d 1371, 1375 (Fed. Cir. 2001). Various other articulations of the standard being applied by the Federal Circuit are reviewed in the opinion below. For further review see Edward D. Manzo, PATENT CLAIM CONSTRUCTION IN THE FEDERAL CIRCUIT §4:1 (2013). The multiple standards leave district courts, the members of our bar association, patent holders, and the public at large adrift in trying to determine whether patent claims pass muster under the statutory definiteness requirement.

The Federal Circuit also has conflated claim construction, which it views as a pure matter of law, with validity of a claim under section 112, ¶ 2, and it has taken it upon itself to determine questions both of claim construction and indefiniteness *de novo*. *See, e.g, Lighting Ballast Control LLC v. Philips Electronics N. Am. Corp.*, No. 2012-1014, 2014 WL 667499, at *1, *9 (Fed. Cir. Feb. 21, 2014) (*en banc*).

The current approaches of the Federal Circuit are incompatible with the precepts this Court set forth. The Federal Circuit has improperly equated claim construction with indefiniteness. IPLAC respectfully submits that to be sufficiently definite within the meaning of the statute, a claim must be construable. The converse is *not* true, however. Some claims are construable but still indefinite, as the Federal Circuit itself recently ruled.[6] While claims that are not construable are indefinite, construability is a necessary *but not sufficient* condition for meeting the definiteness requirement. IPLAC respectfully requests that this Court articulate a consistent indefiniteness standard for assessing the validity of an issued patent claim under section 112.

IPLAC further requests the Court to clarify the standard for review – whether *de novo* by the appellate court or with appropriate deference to the trier of fact. An appropriate standard would require adherence to the dictates of 35 U.S.C. § 112, ¶ 2, *i.e.*,

---

[6] *See Ernie Ball, Inc. v. Earvana, LLC*, 502 Fed. Appx. 971 (Fed. Cir. 2013) (nonprecedential).

less tolerant of claim ambiguity, while considering the presumption of validity found in section 282(a), *e.g.*, a standard used in *Morton Int'l, Inc. v. Cardinal Chem. Co.* In *Morton*, the Federal Circuit held that claims must be clear enough that "those skilled in the art would understand what is claimed when the claim is read in light of the specification." 5 F.3d 1464, 1470 (Fed. Cir. 1993).

On appeal, from our members' point of view, the appropriate weight to be given to determinations of indefiniteness should be that factual findings made by a district court in interpreting patent claims and assessing validity under section 112 should be reviewed under the clearly erroneous standard of review, but that the import of the facts and the ultimate interpretation should be reviewed *de novo*.

I. ARGUMENT

A. THE PATENT STATUTE CALLS FOR CLARITY

Similar to a deed to a parcel of land, a patent's claims define the metes and bounds of the patentee's rights. *See Motion Picture Patents Co. v. Universal Film Mfg. Co.*, 243 U.S. 502, 510 (1917) ("[Claims] so mark where the progress claimed by the patent begins and where it ends that they have been aptly likened to the description in a deed, which sets the bounds to the grant which it contains."). These rights include "the right to exclude others from making, using, offering for sale, or selling the claimed invention." 35 U.S.C. § 154(a)(1). To protect the public interest, this Court finds "no excuse for ambiguous language or vague descriptions. The public should not be deprived of rights supposed to

belong to it, without being clearly told what it is that limits these rights." *Merrill*, 94 U.S. at 573; *see also Evans v. Eaton*, 20 U.S. (7 Wheat.) 356, 434 (1822) (a patent must give "warning": "to put the public in possession of what the [patentee] claims as his own invention, so as . . . to guard against prejudice or injury from the use of an invention which the party may otherwise innocently suppose not to be patented," and "at the same time . . . taking from the inventor the means of [practicing] upon the credulity or the fears of other persons, by pretending that his invention is more than what it really is.").

The "definiteness" requirement is a validity requirement demanding that the "specification shall conclude with one or more claims particularly pointing out and distinctly claiming the subject matter which the applicant regards as his invention." 35 U.S.C. § 112, ¶ 2. This Court's jurisprudence recognizes that "[i]t has long been understood that a patent must describe the exact scope of an invention." *Markman*, 517 U.S. at 373. This "definiteness" requirement "is met only when [patent claims] clearly distinguish what is claimed from what went before in the art and clearly circumscribe what is foreclosed from future enterprise." *United Carbon*, 317 U.S. at 236. A lack of clarity creates a "zone of uncertainty [in] which enterprise and experimentation may enter only at the risk of infringement claims [and] would discourage invention." *Id.* The Patent Office's role is to foster public disclosure of an invention in exchange for a right to exclude:

> Since the act of 1836, the patent laws require that an applicant for a patent shall

> not only, by a specification in writing, fully explain his invention, but that he "shall particularly specify and point out the part, improvement, or combination which he claims as his own invention or discovery." This provision was inserted in the law for the purpose of relieving the courts from the duty of ascertaining the exact invention of the patentee by inference and conjecture, derived from a laborious examination of previous inventions, and a comparison thereof with that claimed by him. This duty is now cast upon the Patent Office. There his claim is, or is supposed to be, examined, scrutinized, limited, and made to conform to what he is entitled to. If the office refuses to allow him all that he asks, he has an appeal. But the courts have no right to enlarge a patent beyond the scope of its claim as allowed by the Patent Office, or the appellate tribunal to which contested applications are referred. When the terms of a claim in a patent are clear and distinct (as they always should be), the patentee, in a suit brought upon the patent, is bound by it.

Keystone Bridge Co. v. Phoenix Iron Co., 95 U.S. 274, 278 (1877). In 2002, this Court confirmed the patent applicant's duty to claim the invention properly, finding that:

> The patent laws "promote the Progress of Science and useful Arts" by rewarding innovation with a temporary monopoly. U.S. Const., Art. I, § 8, cl. 8. The monopoly is a property right; and like any property

> right, its boundaries should be clear. *This clarity is essential to promote progress, because it enables efficient investment in innovation. A patent holder should know what he owns, and the public should know what he does not.* For this reason, the patent laws require inventors to describe their work in "full, clear, concise, and exact terms," 35 U. S. C. § 112, as part of the delicate balance the law attempts to maintain between inventors, who rely on the promise of the law to bring the invention forth, and the public, which should be encouraged to pursue innovations, creations, and new ideas beyond the inventor's exclusive rights.

Festo, 535 U.S. at 730-31 (emphasis added). The patent laws demand a balance between the rights of the inventor and the public, and this balance must be maintained.

B. THE SUPREME COURT ALSO DEMANDS CLARITY

In patent litigation, courts construe claims in light of the patent specification, the prosecution history, other patent claims, and the prior art (in the intrinsic record). *Markman v. Westview Instruments, Inc.*, 52 F.3d 967, 979 (Fed. Cir. 1995) (*en banc*), *aff'd*, 517 U.S. 370 (1996). Issued patent claims (as distinguished from pending application claims) are construed liberally to preserve validity:

> A patent should be construed in a liberal spirit, to sustain the just claims of the inventor. This principle is not to be carried

> so far as to exclude what is in it, or to interpolate anything which it does not contain. But liberality, rather than strictness, should prevail where the fate of the patent is involved, and the question to be decided is whether the inventor shall hold or lose the fruits of his genius and his labors.

Providence Rubber Co. v. Goodyear, 76 U.S. (9 Wall.) 788, 795-96 (1869).

This Court took a tempered view of claim definiteness when it declared "the certainty which the law requires in patents is not greater than is reasonable, having regard to their subject matter." *Minerals Separation, Ltd. v. Hyde*, 242 U.S. 261, 270 (1916). The Court will remember that by the time a patent reaches a definiteness challenge in litigation, the inventor has already made the full and complete disclosure of the new technical subject matter that Congress bargained for and the claim was scrutinized by an expert examiner before the USPTO granted the letters patent to the inventor or assignee. This means that the USPTO has already considered claim definiteness and examined the claimed subject matter, according to the broadest reasonable interpretation in light of the patent specification, for patentability over the art. The inventor has already performed his part of the social contract between the inventor and the public by forgoing other forms of protection. The issue at bar is whether such a claim should now be declared invalid because of its lack of precision.

Over history, the English language has accomplished great things using only twenty-six letters, but it has its limitations. This Court has explained that "the nature of language makes it impossible to capture the essence of a thing in a patent application." *Festo,* 535 U.S. at 731.

Patent claims define the patentee's legal right. *See Markman*, 517 U.S. at 388. This Court noted in *Markman* that claim construction is "a mongrel practice" of law and fact with "evidentiary underpinnings." *Id.* at 378, 390. Patent claims are construed referring to the hypothetical Person of Ordinary Skill In The Art ("POSITA"). *See Carnegie Steel Co. v. Cambria Iron Co.*, 185 U.S. 403, 437 (1902). ("The specification of the patent is not addressed to lawyers, or even to the public generally, but to the manufacturers of steel . . ."). A POSITA should be able to understand and construe patent claims:

> Because claims are to be understood objectively, using objective evidence of meaning to the POSITA, patent claim construction is an exercise of democratic governance in which all persons may engage. It is a practice that all persons may perform with equal hope of being objectively "correct," even if doing so may be difficult and even if predictions about how PTO officials and federal judges may construe claims may turn out to be wrong. Many more private entities evaluate patent claims and their validity and scope than do administrative officials and judges in the context of patent prosecution and litigation.

> For example, lawyers must be able to provide advice about the scope of patent rights that can be obtained and whether patent claims obtained are in fact valid; patent owners and buyers must be able to determine the value and consequences for businesses and individuals of owning or selling patent rights; and patent licensors and licensees must be able to reach agreement regarding what specific patent rights are worth. The ability of private parties to make such determinations predictably and on their own without going to court depends on claim construction being an objective exercise based on evidence that is accessible to all.

Excerpt from Joshua D. Sarnoff and Edward D. Manzo, "An Introduction to, Premises of, and Problems with Patent Claim Construction," to be published in Manzo, PATENT CLAIM CONSTRUCTION IN THE FEDERAL CIRCUIT, *supra*, 2014 edition.[7] The current disagreement between the "definiteness" standard of the Patent Statute and this Court's precedents and the "insolubly ambiguous" standard of the Federal Circuit renders it impossible for our members and their clients to determine with any accuracy whether a court will find a claim indefinite.

---

[7] Publication forthcoming in April 2014; on file with Thomson Reuters Westlaw. IPLAC will provide copies to this Court shortly after publication.

C. THE RECENT FEDERAL CIRCUIT VIEW RUNS COUNTER TO THE CLARITY DEMANDED BY THE PATENT STATUTE AND THIS COURT

At least since 2001, under the rubric of the presumption of validity found in section 282(a) of the Patent Act, the Federal Circuit has moved away from the standard set out in section 112 of the Patent Statute and the precedents of this Court. *See Exxon Research*, 265 F.3d at 1375. Instead, the Federal Circuit has held that "only claims 'not amenable to construction' or 'insolubly ambiguous' are indefinite." *Datamize*, 417 F.3d at 1347. This is wrong. The Federal Circuit posits that "the definiteness of claim terms depends on whether those terms can be given *any reasonable meaning*," *Id.* (emphasis added), "even though the task may be formidable and the conclusion may be one over which reasonable persons will disagree." *Exxon Research*, 265 F.3d at 1375. The result is that the Federal Circuit has announced that patent claims that are open to multiple reasonable interpretations will not be found indefinite.

The Federal Circuit's disparate views on indefiniteness have been recognized by individual Federal Circuit judges. In *Enzo Biochem, Inc. v. Applera Corp.*, Judge Plager explained that the Federal Circuit's "indefiniteness" jurisprudence "seems to be this: if a person of ordinary skill in the art can come up with a plausible meaning for a disputed claim term in a patent, that term, and therefore the claim, is not indefinite." 605 F.3d 1347, 1348 (Fed. Cir. 2010) (Plager J., dissenting from

panel rehearing). Judge Plager further noted that "the Board [in *Ex Parte Miyazaki*] concluded that the Federal Circuit's reading of the indefiniteness requirement was counter to the PTO's broader standard for claim construction during prosecution." *Id.* at 1349 (citing *Ex parte Miyazaki*, 89 U.S.P.Q.2d at 1211). Judge Plager recognized that a difference of standard was permissible since the "Board is clearly right in recognizing that the circumstances are different between pre-issuance and post-issuance application of the definiteness standard with regard to claim terms." *Enzo Biochem*, 605 F.3d at 1349. Judge Plager, however, commented that the Federal Circuit's "definiteness doctrine could go considerably further in promoting [the public notice function of the patent law] than it currently does, with the not inconsequential benefit of shifting the focus from litigation over claim construction to clarity in claim drafting." *Id.* Finally, Judge Plager offered, but was denied, what the Supreme Court did in granting certiorari in this case, namely:

> To begin the discussion of how this court could move in that direction, I would grant the petition for panel rehearing. The court now spends a substantial amount of judicial resources trying to make sense of unclear, overbroad, and sometimes incoherent claim terms. It is time for us to move beyond sticking our fingers in the neverending leaks in the dike that supposedly defines and figuratively surrounds a claimed invention. Instead, we might spend some time figuring out how to support the PTO in requiring that the walls surrounding the claimed

> invention be made of something other than quicksand.

Id.

The Federal Circuit's disparate views on indefiniteness have also been recognized by the USPTO. In a precedential opinion issued by the Board of Patent Appeals and Interferences ("Board"), the Board announced that:

> Rather than requiring that the claims are insolubly ambiguous, we hold that if a claim is amenable to two or more plausible claim constructions, the USPTO is justified in requiring the applicant to more precisely define the metes and bounds of the claimed invention by holding the claim unpatentable under 35 U.S.C. § 112, second paragraph, as indefinite.

Ex parte Miyazaki, 89 U.S.P.Q.2d 1207, 1211 (Bd. Pat. App. & Inter., Nov. 19, 2008). The Board in *Miyazaki* reinforced the Patent Office Rule that states that if a person of ordinary skill in the relevant art would read a claim with more than one reasonable interpretation, then a rejection under section 112, ¶ 2, is appropriate. *See Supplementary Examination Guidelines for Determining Compliance With 35 U.S.C. 112 and for Treatment of Related Issues in Patent Applications*, 76 Fed. Reg. 7162, 7164 (2011).

D. A SINGLE STANDARD IS REQUIRED TO ENABLE A CONSCIENTIOUS PATENT LAWYER TO DETERMINE INDEFINITENESS

The Federal Circuit views the indefiniteness analysis as "inextricably intertwined with claim construction." *Energizer Holdings, Inc. v. Int'l Trade Com'n*, 435 F.3d 1366, 1368 (Fed. Cir. 2006); *see also Noah Systems, Inc. v. Intuit Inc.*, 675 F.3d 1302, 1311 (Fed. Cir. 2012) ("Whether a claim complies with the definiteness requirement of 35 U.S.C. § 112 ¶ 2, is a matter of claim construction . . ."); *Datamize*, 417 F.3d at 1348 ("In the face of an allegation of indefiniteness, general principles of claim construction apply."). Claims are not indefinite if they are "amenable to construction, however difficult that task may be." *Exxon Research*, 265 F.3d at 1375. *See, e.g., Halliburton Energy Servs. Inc. v. M-I LLC*, 514 F.3d 1244, 1249-1250 (Fed. Cir. 2008). The Federal Circuit seemingly contradicts that position though when it declares that "[i]f a claim is indefinite, the claim, by definition, cannot be construed." *Enzo Biochem, Inc. v. Applera Corp.*, 599 F.3d 1325, 1332 (Fed. Cir. 2010).

IPLAC's members include attorneys in private and corporate practices before federal bars throughout the United States, and the U.S. Patent and Trademark Office. In our roles as advocates of and advisors to our clients, it falls on us to tell our clients what a patent, whether a competitor's or their own, covers. Our clients seek our knowledge at all stages, from patent procurement, product development, valuation, licensing, possible

infringement or non-infringement, to litigation at the district court level all the way to appeals to the Supreme Court. Our clients demand what this Court has also demanded, mainly that a patent's "boundaries be clear." *Festo*, 535 U.S. at 731 ("This clarity is essential to promote progress, because it enables efficient investment in innovation."). With the differing standards, determining questions of indefiniteness with a fair degree of accuracy is nearly impossible. Our clients struggle every day with the vagueness and fuzzy boundaries of some of today's patent claims. These clients look to the judiciary to "establish rules that enable a conscientious patent lawyer to determine with a fair degree of accuracy [patent-eligibility questions]" especially with a congress that seems incapable of agreement on any issue. *Diamond v. Diehr*, 450 U.S. 175, 219 (1981) (Stevens, J., dissenting) (citing cases). IPLAC respectfully requests that this Court articulate a consistent indefiniteness standard for post-grant litigation.

An appropriate standard would require adherence to the dictates of 35 U.S.C. § 112, ¶ 2, *i.e.*, less tolerant of claim ambiguity, while considering the presumption of validity found in section 282(a), understanding that "the nature of language makes it impossible to capture the essence of a thing in a patent application." *Festo*, 535 U.S. at 731. That standard cannot arise by the removal of "insolubly" from the "insolubly ambiguous" standard. Invalidating a claim because it is "ambiguous" goes too far. Neither can the standard be so lax as to invalidate every patent because experts often disagree as to the meaning of a claim term. One possible standard is found in an earlier Federal

Circuit decision, *Morton Int'l*, where the Federal Circuit held that claims must be clear enough that "those skilled in the art would understand what is claimed when the claim is read in light of the specification." 5 F.3d at 1470.

For instance, in the present case, the question before the district court and on appeal centered on the construction of the term "spaced relationship." *Biosig Instruments, Inc. v. Nautilus, Inc.*, 715 F.3d 891 (Fed. Cir. 2013) cert. granted, 134 S. Ct. 896 (2014). The trial court construed the term "spaced relationship" and then found the claim, so construed, indefinite. The Federal Circuit majority, using a "pertaining to the function" interpretation of the claim. held the claim to be definite. *Id.* at 901-902. The Federal Circuit concurrence also construed the term "spaced relationship" and then found the claim met the requirements of 35 U.S.C. § 112, ¶ 2. *Id.* at 905 (Schall, J., concurring). The term, "spaced relationship," is not new. A search of the USPTO Full-Text and Image Database found on the USPTO web site (www.uspto.gov) for the term "spaced relationship" in the claims of granted patents (Term 1: "spaced relationship" in Field 1: Claim(s)) reveals this term has been used in the claims of over 22,000 granted patents since 1976. The present case is not before this Court because of the lack of understanding of the term "spaced relationship," but rather because of the dispute between the parties regarding the prior art and the validity of the claim using the term according to section 282(a). *See Id.* at 893-897.

E. THE FEDERAL CIRCUIT HAS INCONSISTENTLY ARTICULATED WHETHER INDEFINITENESS DETERMINATIONS UNDER 35 U.S.C. § 112, ¶ 2, ARE WHOLLY A QUESTION OF LAW OR A MIXED QUESTION OF LAW AND FACT

The process that the Federal Circuit uses to determine indefiniteness "requires a determination whether those skilled in the art would understand what is claimed. To make that determination, we have explained that '[i]n the face of an allegation of indefiniteness, general principles of claim construction apply.'" *Young v. Lumenis, Inc.*, 492 F.3d 1336, 1346 (Fed. Cir. 2007) (quoting *Datamize*, 417 F.3d at 1348). The indefiniteness analysis is inextricably intertwined with claim construction and they both receive *de novo* review on appeal. *Id.* at 1344; *see also Lighting Ballast*, 2014 WL 667499, at *1, *9.

Federal Rule of Civil Procedure 52(a)(6) provides the standard of review for factual findings: "Findings of fact, whether based on oral or other evidence, must not be set aside unless clearly erroneous, and the reviewing court must give due regard to the trial court's opportunity to judge the witnesses' credibility." Rule 52(a) applies to "all actions tried upon the facts without a jury," *United States v. U.S. Gypsum Co.*, 333 U.S. 364, 394-95 (1948), and "does not make exceptions or purport to exclude certain categories of factual findings from the obligation of a court of appeals to accept a district court's findings unless clearly erroneous." *Pullman-Standard v. Swint*, 456 U.S. 273, 287 (1982).

The indefiniteness analysis is a question of a patent's validity. Under the presumption of validity in section 282(a), a patent invalidity defense, such as indefiniteness, must be proven by clear and convincing evidence. *See generally Microsoft Corp. v. i4i Ltd. P'ship*, 131 S. Ct. 2238 (2011). The presumption of validity calls for the Court to "separat[e] factual and legal aspects of an invalidity claim." *Id.* at 2253 (Breyer, J., joined by Scalia and Alito, JJ., concurring).

Ever since 1995, the Federal Circuit has treated every aspect of claim construction as a purely legal inquiry. *Markman*, 52 F.3d at 976-77, 979. An *en banc* Federal Circuit has had three opportunities since then to revisit this standard of review. *See Cybor Corp. v. FAS Techs., Inc.*, 138 F.3d 1448, 1456 (Fed. Cir. 1998) (*en banc*); *Phillips v. AWH Corp.*, 415 F.3d 1303, 1330-1333 (Fed. Cir. 2005) (*en banc*); *Lighting Ballast*, 2014 WL 667499, at *1, *9. Most recently in *Lighting Ballast*, the Federal Circuit reaffirmed that patent claim construction receives *de novo* review on appeal and is determined without deference to the ruling of the district court. *Lighting Ballast*, 2014 WL 667499, at *1, *9. The Federal Circuit reviews *de novo* even such findings as those reached after "live hearings with argument and testimony, sometimes covering several days." *Retractable Techs., Inc. v. Becton, Dickinson & Co.*, 659 F.3d 1369, 1374 (Fed. Cir. 2011) (O'Malley, J., dissenting from denial of rehearing *en banc*).

The Federal Circuit, however, has also held that definiteness under 35 U.S.C. § 112, ¶ 2, is a question of law with underlying factual determinations. *Green Edge Enterprises, LLC v. Rubber Mulch Etc.*,

LLC, 620 F.3d 1287, 1299 (Fed. Cir. 2010). These underlying factual determinations must be given deference on appeal, and reviewed for clear error. *See id.; see also Young*, 492 F.3d at 1344–45 (stating that a showing of indefiniteness requires clear and convincing evidence). The Federal Circuit determined that "[l]ike enablement, definiteness, too, is amenable to resolution by the jury where the issues are factual in nature." *BJ Servs. Co. v. Halliburton Energy Servs., Inc.*, 338 F.3d 1368, 1372 (Fed. Cir. 2003).

Some district courts have interpreted the Federal Circuit's precedent as allowing for the submission of the matter of indefiniteness to the jury when the dispute is factual. *See Dow Chem. Co. v. NOVA Chemicals Corp. (Canada)*, 629 F. Supp. 2d 397, 403 (D. Del. 2009) (citing *BJ Servs.*, 338 F.3d at 1372-73). Other district courts have discussed the unclear nature of indefiniteness determinations. In *Sys. Mgmt. Arts Inc. v. Avesta Technologies, Inc.*, the court noted:

> While the Federal Circuit has often stated that the indefiniteness inquiry is "drawn from" the district court's role as a construer of patent claims, the circuit court has not expressly held that these inquiries are one and the same, nor that the indefiniteness inquiry can not involve underlying questions of fact. Moreover, to state that the indefiniteness inquiry is a question of law or "legal conclusion," does not answer the question. The Federal Circuit has recognized that some questions of law involve underlying issues of fact.

137 F. Supp. 2d 382, 400 (S.D.N.Y. 2001) (internal citations omitted). Thus, the Federal Circuit precedent related to 35 U.S.C. § 112, ¶ 2, is subject to the logical interpretation that an indefiniteness determination on appeal is a legal inquiry that is informed by issues of fact that are necessary to clarify what the "essence of a thing" is. *See Festo*, 535 U.S. at 731. The factual framework relevant to an indefiniteness determination should remain undisturbed on appeal in the absence of clear error by the court of first instance.

Due to the lack of guidance concerning the standard of review, Judge Plager, in his dissent in *Enzo Biochem*, identifies the conundrum faced by the patent bar:

> [I]f several persons of ordinary skill come up with competing but plausible interpretations of a disputed term – as is typically the case with competing "expert witnesses" in patent infringement litigation – the problem is not one of an inherently ambiguous and potentially indefinite claim term, but rather the problem becomes simply one of picking the "right" interpretation for that term. Since picking the "right" interpretation – claim construction – is a matter of law over which this court rules, and since the view of the trial judge hearing the case is given little weight, so that the trial judge's view on appeal becomes just a part of the cacophony before this court, it is not until three court of appeals judges randomly selected for that purpose pick the "right" interpretation that the public, not to mention the patentee and

> its competitors, know what the patent actually claims. The inefficiencies of this system, and its potential inequities, are well known in the trade.

Enzo Biochem, 605 F.3d at 1348 (Plager J., dissenting from panel rehearing) (internal footnote omitted).

This Court should identify whether indefiniteness is an issue of law, meriting *de novo* review on appeal, or for instance, a mixed question of law and fact (especially given the ever present expert testimony on patent claim validity) for which some deference must be given to the trier of fact. On appeal, the appropriate weight to be given to determinations of indefiniteness should be that factual findings made by a district court in interpreting patent claims should be reviewed under the clearly erroneous standard of review, but the import of the facts and the ultimate interpretation should be reviewed *de novo*. This is based on the Federal Circuit's much greater expertise in assessing the import of the facts of claim interpretation and the district court being in a better position to make credibility determinations.

CONCLUSION

Amicus curiae, the Intellectual Property Law Association of Chicago, urges this Court to articulate a consistent indefiniteness standard for post-grant patent litigation when assessing the validity of a patent claim under section 112. An appropriate standard would require adherence to the dictates of 35 U.S.C. § 112, ¶ 2, *i.e.*, less tolerant of claim ambiguity, while considering the presumption of

validity found in section 282(a), *e.g.*, a standard used in *Morton Int'l*, where the Federal Circuit held that claims must be clear enough that "those skilled in the art would understand what is claimed when the claim is read in light of the specification." 5 F.3d at 1470. On appeal, the appropriate weight to be given to determinations of indefiniteness should be that factual findings made by a district court in interpreting patent claims should be reviewed under the clearly erroneous standard of review, but the import of the facts and the ultimate interpretation should be reviewed *de novo*.

Respectfully submitted,

JEFFREY B. BURGAN*
L. SCOTT BEALL
LEYDIG, VOIT & MAYER, LTD.
TWO PRUDENTIAL PLAZA
180 N. STETSON AVE.
SUITE 4900
CHICAGO, IL 60601
(312) 616-5600
JBURGAN@LEYDIG.COM

BRENT A. HAWKINS,
PRESIDENT
THE INTELLECTUAL
PROPERTY LAW
ASSOCIATION OF CHICAGO
P.O. BOX 472
CHICAGO, IL 60690
(312) 984-7764

Counsel for Amicus Curiae
The Intellectual Property Law Association of Chicago

March 3, 2014

* Counsel of Record

AMICUS CURIAE BRIEF

Supreme Court, U.S.
FILED
MAR 3 - 2014
OFFICE OF THE CLERK

RECORD
AND
BRIEFS

No. 13-369

IN THE

Supreme Court of the United States

NAUTILUS, INC.,

Petitioner,

v.

BIOSIG INSTRUMENTS, INC.,

Respondent.

ON WRIT OF CERTIORARI TO THE UNITED STATES COURT OF APPEALS FOR THE FEDERAL CIRCUIT

BRIEF OF *AMICUS CURIAE* INTELLECTUAL PROPERTY OWNERS ASSOCIATION IN SUPPORT OF NEITHER PARTY

Of counsel:
PHILIP S. JOHNSON,
President
KEVIN H. RHODES,
Chair, Amicus Brief Committee
INTELLECTUAL PROPERTY
OWNERS ASSOCIATION
1501 M Street, NW, Suite 1150
Washington, DC 20005
(202) 507-4500

PAUL H. BERGHOFF
Counsel Of Record
JORDAN J. PRINGLE
MCDONNELL BOEHNEN
HULBERT & BERGHOFF LLP
300 South Wacker Drive
Chicago, Illinois 60606
(312) 913-0001
berghoff@mbhb.com

Attorneys for Amicus Curiae

252051

COUNSEL PRESS
(800) 274-3321 • (800) 359-6859

Library of Congress
Law Library

TABLE OF CONTENTS

Page

TABLE OF CONTENTS i

TABLE OF CITED AUTHORITIES ii

INTEREST OF AMICUS CURIAE 1

SUMMARY OF ARGUMENT 2

ARGUMENT 5

I. The Federal Circuit's Current "Insolubly Ambiguous" Standard Is Inconsistent with the Statutory Requirement of Particular and Distinct Patent Claiming 5

II. A "Reasonable Clarity" Standard Should Apply to the Definiteness Requirement of 35 U.S.C. § 112 9

III. The Presumption of Validity Set Forth in 35 U.S.C. § 282 Is Consistent with the Statutory Requirement of Particular and Distinct Patent Claiming 12

CONCLUSION 15

APPENDIX 1a

TABLE OF CITED AUTHORITIES

Page

CASES

Biosig Instruments, Inc. v. Nautilus, Inc.,
715 F.3d 891 (Fed. Cir. 2013).....1

Datamize, LLC v. Plumtree Software, Inc.,
417 F.3d 1342 (Fed. Cir. 2005).....10

Ecolab, Inc. v. Envirochem, Inc.,
264 F.3d 1358 (Fed. Cir. 2001).....11

Evans v. Eaton,
20 U.S. 356 (1822).....7

Festo Corp. v. Shoketsu Kinzoku Kogyo Kabushiki Co., Ltd.,
535 U.S. 722 (2002).....3, 7, 12

Gen. Elec. Co. v. Wabash Appliance Corp.,
304 U.S. 364 (1938).....3, 6

Halliburton Energy Servs., Inc. v. M-I LLC,
514 F.3d 1244 (Fed. Cir. 2008).....14

Markman v. Westview Instruments, Inc.,
517 U.S. 370 (1996).....5, 9, 10

Merrill v. Yeomans,
94 U.S. 568 (1876).....3, 4, 7

Cited Authorities

Page

Microsoft Corp. v. i4i Ltd. P'ship,
131 S. Ct. 2238 (2011) 12

Pall Corp. v. Micron Separations, Inc.,
66 F.3d 1211 (Fed. Cir. 1995) 11

SmithKline Beecham Corp. v. Apotex Corp.,
403 F.3d 1331 (Fed. Cir. 2005) 10

Ultimax Cement Mfg. Corp. v. CTS Cement Mfg. Corp.,
587 F.3d 1339 (Fed. Cir. 2009) 10

United Carbon Co. v. Binney & Smith Co.,
317 U.S. 228 (1942) 3, 4, 6

Verve, LLC v. Crane Cams, Inc.,
311 F.3d 1116 (Fed. Cir. 2002) 11

White v. Dunbar,
119 U.S. 47 (1886) 7

STATUTES

35 U.S.C. § 112 ..... *passim*

35 U.S.C. § 282 ..... *passim*

Page

OTHER MATERIALS

Michael Risch, *The Failure of Public Notice in Patent Prosecution*, 21 Harv. J.L. & Tech. 179 (2007) 8

R. Polk Wagner, *Understanding Patent-Quality Mechanisms*, 157 U. Pa. L. Rev. 2135 (2009) 8

INTEREST OF *AMICUS CURIAE*

Amicus curiae Intellectual Property Owners Association (IPO) is a trade association representing companies and individuals in all industries and fields of technology who own or are interested in U.S. intellectual property rights.[1] IPO's membership includes more than 200 companies and a total of over 12,000 individuals who are involved in the association either through their companies or as inventor, author, executive, law firm, or attorney members. Founded in 1972, IPO represents the interests of all owners of intellectual property. IPO regularly represents the interests of its members before Congress and the USPTO and has filed amicus curiae briefs in this Court and other courts on significant issues of intellectual property law. The members of IPO's Board of Directors, which approved the filing of this brief, are listed in the appendix.[2]

IPO submits this brief because of the importance of having a meaningful standard to determine whether patent claims comply with the requirement for definiteness set forth in 35 U.S.C. § 112. In *Biosig Instruments, Inc. v. Nautilus, Inc.*, 715 F.3d 891 (Fed. Cir. 2013), the Federal Circuit held that a claim is indefinite under 35 U.S.C. § 112

---

1. No counsel for a party authored this brief in whole or in part, and no such counsel or party made a monetary contribution intended to fund the preparation or submission of this brief. No person other than the *Amicus Curiae* or its counsel made a monetary contribution to its preparation or submission. The parties have consented to the filing of this brief.

2. IPO procedures require approval of positions in briefs by a two-thirds majority of directors present and voting.

only when it is not "amenable to construction" or "insolubly ambiguous." IPO takes no position on the patentability of the particular claims at issue in this case, whether under 35 U.S.C. § 112 or the other conditions for patentability set forth in the Patent Act. Rather, IPO files this brief because it believes that the Federal Circuit's current "insolubly ambiguous" standard is not consistent with the language of 35 U.S.C. § 112(b) or this Court's precedent. Instead, IPO believes that an appropriate standard for the definiteness requirement of 35 U.S.C. § 112 should require claims to be reasonably clear to a person having ordinary skill in the art in light of the specification and prosecution history. In addition, IPO believes that the statutory presumption of validity set forth in 35 U.S.C. § 282 applies to all grounds of alleged invalidity, including indefiniteness and other validity challenges based on alleged failure to comply with 35 U.S.C. § 112.

SUMMARY OF ARGUMENT

The Patent Act requires every patent to "conclude with one or more claims particularly pointing out and distinctly claiming the subject matter which the inventor or a joint inventor regards as the invention." 35 U.S.C. § 112(b).[3] This is known as the "definiteness" requirement.

---

3. Paragraph 2 of 35 U.S.C. § 112 was replaced with newly designated § 112(b) when the Leahy-Smith America Invents Act ("AIA") took effect on September 16, 2012. The pre-AIA version of § 112 applies in this case because the patent-in-suit issued prior to that date. Former Section 112, ¶ 2 is substantively identical to current Section 112(b), the former stating, in part, that "[t]he specification shall conclude with one or more claims particularly pointing out and distinctly claiming the subject matter which the applicant regards as his invention."

This Court has consistently held that the requirement for definiteness is necessary to provide the public with notice of the boundaries of the patent rights, and thereby promote innovation. For over a century, this Court has required clarity in patent claims in order to protect the public from the chilling uncertainty of ambiguous claims. *Festo Corp. v. Shoketsu Kinzoku Kogyo Kabushiki Co., Ltd.*, 535 U.S. 722, 730-31 (2002) ("[A patent right] is a property right; and like any property right, its boundaries should be clear . . . clarity is essential to promote progress, because it enables investment in innovation. A patent holder should know what he owns, and the public should know what he does not."); *United Carbon Co. v. Binney & Smith Co.*, 317 U.S. 228, 236 (1942) ("The statutory requirement" is designed to prevent a "zone of uncertainty which . . . would discourage invention."); *Gen. Elec. Co. v. Wabash Appliance Corp.*, 304 U.S. 364, 369 (1938) ("The statute seeks to guard against unreasonable advantages to the patentee and disadvantages to others arising from uncertainty as to their rights . . . so that it may be known which features may be safely used or manufactured without a license and which may not." (internal footnote omitted)); *Merrill v. Yeomans*, 94 U.S. 568, 573-74 (1876) ("It seems to us that nothing can be more just and fair, both to the patentee and to the public, than that the former should understand, and correctly describe, just what he has invented, and for what he claims a patent.").

The Federal Circuit has held that a claim is indefinite only when it is "not amenable to construction" or is "insolubly ambiguous." *Id.* (internal quotations and citations omitted). This standard has proven difficult to apply in litigation and other contexts because it is inherently unclear when a merely ambiguous claim

becomes "insolubly" ambiguous. More importantly, however, this standard fails to discourage applicants from obscuring the scope of the claimed invention, such that the public is "deprived of rights supposed to belong to it, without being clearly told what it is that limits these rights." *Merrill*, 94 U.S. at 573. Indeed, IPO believes that the "insoluble ambiguity" standard does not apply the statutory requirement of particular and distinct patent claiming and is not in harmony with this Court's precedent.

IPO believes that an appropriate standard for the definiteness requirement of 35 U.S.C. § 112 would require that the claims be reasonably clear to a person having ordinary skill in the art in light of the specification and prosecution history. Such a standard finds firm grounding in this Court's decision in *United Carbon*. *United Carbon*, 317 U.S. at 236 ("[T]he claims must be reasonably clear-cut to enable courts to determine whether novelty and invention are genuine. . . . An invention must be capable of accurate definition, and it must be accurately defined, to be patentable.") Furthermore, IPO believes that such a "reasonable clarity" standard would be easier to apply than the current "insolubly ambiguity" standard. IPO also believes that a "reasonable clarity" standard – assessed from the standpoint of a person having ordinary skill in the art in light of the specification and prosecution history – would limit patentable claims to those that give the public reasonable notice of the scope of the subject matter that the inventor claims as his or her invention.

IPO urges caution, however, against applying the "reasonable clarity" standard – or any standard for determining claim definiteness, for that matter – in a

manner that conflates the issues of claim construction and claim definiteness. In virtually any patent infringement litigation, the parties dispute the meanings of one of more claim terms, each citing evidence to support its proffered construction of the disputed term(s). This Court's holding in *Markman v. Westview Instruments, Inc.*, 517 U.S. 370 (1996), addressed the issue of how claim terms are to be interpreted in such disputes. The fact that the patent owner and an accused infringer disagree about the meaning of a claim term does not mean that term lacks "reasonable clarity," even if each party's construction is reasonable and the correct meaning is a close question.

Finally, IPO believes that the statutory presumption of validity set forth in 35 U.S.C. § 282 applies to all grounds of alleged invalidity, including indefiniteness and other validity challenges based on alleged failure to comply with 35 U.S.C. § 112. The statutory presumption of validity does not dilute or otherwise affect the statutory need for claims to particularly point out and distinctly claim the invention. Instead, it merely assigns the burden of establishing a defense of indefiniteness on challengers.

ARGUMENT

I. The Federal Circuit's Current "Insolubly Ambiguous" Standard Is Inconsistent with the Statutory Requirement of Particular and Distinct Patent Claiming

The Federal Circuit's current "insolubly ambiguous" standard for indefiniteness is not in accordance with the language of 35 U.S.C. § 112 or this Court's precedent. Congress determined that every patent specification "shall

conclude with one or more claims particularly pointing out and distinctly claiming the subject matter which the inventor or a joint inventor regards as the invention." 35 U.S.C. § 112(b). This Court has consistently emphasized the importance of requiring clear, understandable claims. In *General Electric*, this Court explained:

> The limits of a patent must be known for the protection of the patentee, the encouragement of the inventive genius of others, and the assurance that the subject of the patent will be dedicated ultimately to the public. The statute seeks to guard against unreasonable advantages to the patentee and disadvantages to others arising from uncertainty as to their rights. The inventor must inform the public during the life of the patent of the limits of the monopoly asserted, so that it may be known which features may be safely used or manufactured without a license and which may not.

Gen. Elec., 304 U.S. at 369.

This Court expanded on the requirement for clear claiming in its decision in *United Carbon*. In *United Carbon*, this Court held that "[t]he statutory requirement of particularity and distinctness in claims is met only when they clearly distinguish what is claimed from what went before in the art and clearly circumscribe what is foreclosed from future enterprise." 317 U.S. at 236. This Court further emphasized that a "zone of uncertainty" surrounding the scope of patent claims "would discourage invention only a little less than unequivocal foreclosure of the field." *Id.*

Indeed, this Court's recognition of the need to avoid vague and indefinite claims dates back to the 19th century. "[T]he very purpose" of a patent claim is to "mak[e] the patentee define *precisely* what his invention is; and it is unjust to the public, as well as an evasion of the law, to construe it in a manner different from the plain import of its terms." *White v. Dunbar*, 119 U.S. 47, 52 (1886) (emphasis added); *see also Merrill*, 94 U.S. at 573-74; *Evans v. Eaton*, 20 U.S. 356, 434 (1822) (a patent must give "warning": "to put the public in possession of what the [patentee] claims as his own invention, so as . . . to guard against prejudice or injury from the use of an invention which the party may otherwise innocently suppose not to be patented," and "at the same time . . . taking from the inventor the means of practising upon the credulity or the fears of other persons, by pretending that his invention is more than what it really is"). "This clarity is essential to promote progress, because it enables efficient investment in innovation. A patent holder should know what he owns, and the public should know what he does not." *Festo*, 535 U.S. at 730-31.

The Federal Circuit's "insolubly ambiguous" standard cannot be squared with the statute's requirement for claims particularly pointing out and distinctly claiming the invention. In addition, the current standard is not consistent with the decisions of this Court relating to the required clarity of patent claims. The fundamental problem with the "insolubly ambiguous" standard is that it sets the bar too low for patentability. The current standard does not provide members of the public (or district court judges) with a meaningful standard that can be easily applied to determine whether a given patent claim complies with the statute's requirement for particularity and definiteness.

Indeed, the current standard used by the Federal Circuit encourages, rather than discourages, deliberately poor patent claim drafting, i.e., the drafting of claims with the intent to create ambiguity rather than give true notice of what was invented. Under the "insolubly ambiguous" standard, too many patents leave potential infringers with great difficulty reliably determining whether particular activities would infringe. *See* Michael Risch, *The Failure of Public Notice in Patent Prosecution*, 21 Harv. J.L. & Tech. 179, 188 (2007) ("Patent applicants have an incentive to allow claims to remain vague so that they can mold the claims to fit the future product of a currently unknown, potential infringer or to avoid invalidation if previously undiscovered prior art comes to light."); R. Polk Wagner, *Understanding Patent-Quality Mechanisms*, 157 U. Pa. L. Rev. 2135, 2149 (2009) ("[A] patentee will almost certainly seek substantial vagueness, thus gaining flexibility to effectively alter the scope and description of the patent according to changing circumstances.").

Based on the current standard, the "zone of uncertainty" created by ambiguous claims (that may or may not be "insolubly ambiguous") may result in undue chilling of competitive design-around activity or may be leveraged to extract unwarranted royalties and litigation settlements from competitors and other members of the public. IPO believes that a proper standard for indefiniteness in accordance with the statute's language and this Court's jurisprudence would impose the risk of avoiding claim ambiguity squarely on the drafter of those claims, rather than on the public. Patentees should be required to make their claims reasonably understandable to the relevant members of the public, i.e., the persons of ordinary skill in the art. Therefore, IPO believes that

the Federal Circuit's current "insolubly ambiguous" standard is inconsistent with the statutory requirement of particular and distinct patent claiming, and a different standard for definiteness should apply.

II. A "Reasonable Clarity" Standard Should Apply to the Definiteness Requirement of 35 U.S.C. § 112

IPO believes that an appropriate standard for the definiteness requirement of 35 U.S.C. § 112 would require that the claims be reasonably clear to a person having ordinary skill in the art in light of the specification and prosecution history.[4] Such a "reasonable clarity" standard would be easier to apply to specific claims than the current "insolubly ambiguous" standard. Further, a "reasonable clarity" standard would limit patentable claims to those claims that give the relevant public (i.e., those of skill in the art) reasonable notice of the scope of the subject matter that the inventor claims as his or her invention.

However, IPO believes it is vitally important to the patent system that the definiteness standard of 35 U.S.C. § 112 not be applied in an overly rigid or formulaic manner. Inventors need to be able to claim their inventions in ways that make sense in the context of the particular invention and relevant art area. For example, the mere existence of an argument concerning claim construction does not render a claim indefinite. Experience teaches us that virtually all patents involved in litigation legitimately

4. In accordance with this Court's decision in *Markman v. Westview Instruments, Inc.*, 517 U.S. 370 (1996), the district court may need to consult extrinsic evidence, such as technical dictionaries or the testimony of experts, in order to understand what the words used in the claims mean to one of skill in the art.

require at least some claim construction by the court. However, the fact that a district court is called upon to construe a claim term in accordance with this Court's holding in *Markman v. Westview Instruments, Inc.*, 517 U.S. 370 (1996) should not automatically (or presumptively) render that claim indefinite. To hold otherwise would improperly reward attempts by accused infringers to create ambiguity during the claim construction process where no significant ambiguity exists.[5]

Further, indefiniteness should not be confused with over-breadth. The accuracy and precision of a claim is a distinct consideration from the narrow or broad scope of that claim. A claim can be reasonably understandable (and therefore definite) and still be quite broad, as long as a person having ordinary skill in the art can understand the metes and bounds of the claim. *See Ultimax Cement Mfg. Corp. v. CTS Cement Mfg. Corp.*, 587 F.3d 1339, 1352 (Fed. Cir. 2009) ("Merely claiming broadly does not render a claim insolubly ambiguous, nor does it prevent the public from understanding the scope of the patent."); *SmithKline Beecham Corp. v. Apotex Corp.*, 403 F.3d 1331, 1340–41 (Fed. Cir. 2005) ("Breadth is not indefiniteness.").[6] The scope of the claim is a question of

---

5. This is consistent with the Federal Circuit's statement that "the definiteness of claim terms depends on whether those terms can be given any reasonable meaning." *Datamize, LLC v. Plumtree Software, Inc.*, 417 F.3d 1342, 1347 (Fed. Cir. 2005).

6. The distinction between indefiniteness and claim scope applies equally to the scope of the claim as a whole as well as to individual elements of the claim. Indeed, the scope of an individual claim element may be rendered reasonably clear in the context of the entire claim.

legal claim interpretation. And while a claim with a broad scope may raise other validity issues (such as anticipation, obviousness, enablement and lack of written description), these other issues are independent of whether the claim is definite under 35 U.S.C. § 112.

Notably, qualifying modifiers such as "about" and "substantially" have been used in claim drafting for many decades. It is IPO's belief, based on the longstanding experience of its members, that the use of such terms does not *necessarily* render a claim indefinite as long as a person having ordinary skill in the art can reasonably understand the scope of the claim. The Federal Circuit has held that these words can appropriately help an inventor protect the full scope of his or her invention in situations where numerical precision or an otherwise overly strict boundary would describe the invention too narrowly. *See Verve, LLC v. Crane Cams, Inc.*, 311 F.3d 1116, 1120 (Fed. Cir. 2002) ("Expressions such as 'substantially' are used in patent documents when warranted by the nature of the invention, in order to accommodate the minor variations that may be appropriate to secure the invention. Such usage may well satisfy the charge to 'particularly point out and distinctly claim' the invention, 35 U.S.C. § 112, and indeed may be necessary in order to provide the inventor with the benefit of his invention."); *Ecolab, Inc. v. Envirochem, Inc.*, 264 F.3d 1358, 1367 (Fed. Cir. 2001) (quoting *Pall Corp. v. Micron Separations, Inc.*, 66 F.3d 1211, 1217 (Fed. Cir. 1995) ("[L]ike the term 'about,' the term 'substantially' is a descriptive term commonly used in patent claims to "avoid a strict numerical boundary to the specified parameter."). To presume that the use of such traditional, qualifying terms renders a claim per se indefinite would upset the settled expectations of the

patent system and should be avoided. *See Festo*, 535 U.S. at 739.

Taking all of these factors into account, IPO urges the Court to adopt a definiteness standard under 35 U.S.C. § 112 requiring the scope of a patent claim to be reasonably clear to a person having ordinary skill in the art in light of the specification and prosecution history.

III. The Presumption of Validity Set Forth in 35 U.S.C. § 282 Is Consistent with the Statutory Requirement of Particular and Distinct Patent Claiming

Under 35 U.S.C. § 282, each claim of a patent is independently presumed by law to be valid. "The burden of establishing invalidity of a patent or any claim thereof shall rest on the party asserting such validity." 35 U.S.C. § 282(a). Indefiniteness is one of the invalidity defenses set forth in 35 U.S.C. § 282(b)(3)(A). Accordingly, patent claims are presumed definite, and the Federal Circuit has properly followed Congress' statutory framework on this point. Moreover, this Court recently upheld the traditional view that the presumption of validity applies to invalidity defenses. *See Microsoft Corp. v. i4i Ltd. P'ship*, 131 S. Ct. 2238 (2011) (holding that defenses to patent infringement claims must be proved by clear and convincing evidence).

Indeed, validity challenges based on alleged failure to comply with the conditions for patentability set forth in Section 112 present an even clearer case for the presumption of validity based on the presumption of administrative correctness than did the prior art validity challenges at issue in the *Microsoft v. i4i* case. In *Microsoft*, the Court held that the presumption of validity mandated

by Congress in Section 282 applies to all prior art, whether or not previously before the PTO during prosecution, and specifically rejected Microsoft's argument that the presumption should not apply to art that was not before the PTO during prosecution. In contrast, Section 112 does not involve the situation where relevant information was not before the PTO during prosecution of the patent application. The PTO is charged with examining every patent claim in every patent application for compliance with the requirements for patentability in Section 112, including specifically the 112(b) requirement that the claims be sufficiently definite.

Thus, in addition to the fact that Section 282 does not exempt Section 112 validity challenges from the statutory presumption of validity, the presumption of administrative correctness fully supports the presumption of validity as well. It is never the case that new information is presented in litigation that was not before the PTO during prosecution -- in other words, every 112 defense in litigation is a direct challenge to the correctness of the PTO's decision that the claim is sufficiently definite, based on the same record the PTO previously considered. As such, the challenger should bear the burden of overcoming the presumption that the PTO made the correct decision.

IPO does not believe that this statutory presumption of validity dilutes the parallel requirement in the statute that claims particularly point out and distinctly claim the invention. Instead, the presumption of validity acts to assign to challengers of the patent's validity the burden of establishing the defense of indefiniteness. An accused infringer can overcome the presumption of definiteness by showing "by clear and convincing evidence that a

skilled artisan could not discern the boundaries of the claim based on the claim language, the specification, and the prosecution history, as well as her knowledge of the relevant art area." *Halliburton Energy Servs., Inc. v. M-I LLC*, 514 F.3d 1244, 1249-50 (Fed. Cir. 2008).

IPO believes that the statutory presumption of validity set forth in 35 U.S.C. § 282 applies to all grounds of alleged invalidity, including indefiniteness and other validity challenges based on alleged failure to comply with 35 U.S.C. § 112. In addition, IPO believes that the statutory presumption of validity is fully consistent with the statutory need for claims to particularly point out and distinctly claim the invention.

CONCLUSION

IPO urges the Court to discard the Federal Circuit's current "insolubly ambiguous" standard for indefiniteness. Instead, IPO urges the Court to adopt a "reasonable clarity" standard that would require that the claims be reasonably understandable to a person having ordinary skill in the art in light of the specification and prosecution history. IPO believes that a "reasonable clarity" standard would limit patentable claims to those claims that give the public reasonable notice of the scope of the subject matter that the inventor claims as his or her invention. Further, IPO urges the Court to apply the statutory presumption of validity set forth in 35 U.S.C. § 282 to all grounds of alleged invalidity, including indefiniteness.

Respectfully submitted

Of counsel:
PHILIP S. JOHNSON,
President
KEVIN H. RHODES,
Chair, Amicus Brief Committee
INTELLECTUAL PROPERTY
OWNERS ASSOCIATION
1501 M Street, NW, Suite 1150
Washington, DC 20005
(202) 507-4500

PAUL H. BERGHOFF
Counsel Of Record
JORDAN J. PRINGLE
MCDONNELL BOEHNEN
HULBERT & BERGHOFF LLP
300 South Wacker Drive
Chicago, Illinois 60606
(312) 913-0001
berghoff@mbhb.com

Attorneys for Amicus Curiae

APPENDIX

APPENDIX[1]

Members of the Board Of Directors Intellectual Property Owners Association

Edward Blocker
Koninklijke Philips N.V.

Tina M. Chappell
Intel Corp.

William J. Coughlin
Ford Global Technologies LLC

Robert DeBerardine
Sanofi-Aventis

Anthony DiBartolomeo
SAP AG

Louis Foreman
Enventys

Scott M. Frank
AT&T

Darryl P. Frickey
Dow Chemical Co.

Roger Gobrogge
Rolls-Royce Corp.

Krish Gupta
EMC Corporation

Horacio Gutierrez
Microsoft Corp.

Jennifer M. Hall
Mars Inc.

Alan W. Hammond
Life Technologies Corp.

Dennis R. Hoerner, Jr.
Monsanto Co.

Carl B. Horton
General Electric Co.

Michael Jaro
Medtronic, Inc.

Philip S. Johnson
Johnson & Johnson

Lisa K. Jorgenson
STMicroelectronics, Inc.

---

1. IPO procedures require approval of positions in briefs by a two-thirds majority of directors present and voting.

Appendix

Charles M. Kinzig
GlaxoSmithKline

Christopher H. Kirkman
The Travelers Companies, Inc.

David J. Koris
Shell International B.V.

Allen Lo
Google Inc.

Timothy F. Loomis
Qualcomm, Inc.

Steven W. Miller
Procter & Gamble Co.

Douglas K. Norman
Eli Lilly and Co.

Elizabeth A. O'Brien
Covidien

Sean O'Brien
United Technologies Corp.

Salvatore Pace
Praxair, Inc.

Richard F. Phillips
Exxon Mobil Corp.

Dana Rao
Adobe Systems Inc.

Kevin H. Rhodes
3M Innovative Properties Co.

Mark L. Rodgers
Air Products & Chemicals, Inc.

Curtis Rose
Hewlett-Packard Co.

Matthew Sarboraria
Oracle USA Inc.

Manny Schecter
IBM Corp.

Steven J. Shapiro
Pitney Bowes Inc.

Dennis C. Skarvan
Caterpillar Inc.

Russ Slifer
Micron Technology, Inc.

Terri H. Smith
Motorola Solutions, Inc.

Daniel J. Staudt
Siemens Corp.

Brian K. Stierwalt
ConocoPhillips

Thierry Sueur
Air Liquide

James J. Trussell
BP America, Inc.

Roy Waldron
Pfizer, Inc.

Michael Walker
DuPont

BJ Watrous
Apple Inc.

Stuart L. Watt
Amgen, Inc.

Michael Young
Roche, Inc.

AMICUS CURIAE BRIEF

RECORD AND BRIEFS

Supreme Court, U.S.
FILED
APR 2 2014
OFFICE OF THE CLERK
SUPREME COURT U.S.

No. 13-369

IN THE

Supreme Court of the United States

NAUTILUS, INC.,

Petitioner,

v.

BIOSIG INSTRUMENTS, INC.,

Respondent.

ON WRIT OF CERTIORARI TO THE UNITED STATES COURT OF APPEALS FOR THE FEDERAL CIRCUIT

BRIEF OF INTERVAL LICENSING LLC AS *AMICUS CURIAE* IN SUPPORT OF RESPONDENT

MICHAEL HEIM
NATHAN J. DAVIS
DOUGLAS R. WILSON
NICK PATEL
HEIM, PAYNE & CHORUSH LLP
600 Travis St., Suite 6710
Houston, TX 77002

JUSTIN A. NELSON
SUSMAN GODFREY L.L.P.
1201 Third Avenue
Suite 3800
Seattle, WA 98101

THOMAS C. GOLDSTEIN
Counsel of Record
TEJINDER SINGH
GOLDSTEIN & RUSSELL, P.C.
5225 Wisconsin Ave., N.W.
Suite 404
Washington, DC 20015
(202) 362-0636
tg@goldsteinrussell.com

MAX L. TRIBBLE, JR.
SUSMAN GODFREY L.L.P.
1000 Louisiana St.
Suite 5100
Houston, TX 77002

WILSON-EPES PRINTING CO., INC. – (202) 789-0096 – WASHINGTON, D. C. 20002

Library of Congress
Law Library

TABLE OF CONTENTS

TABLE OF AUTHORITIES iii

INTEREST OF AMICUS CURIAE 1

SUMMARY OF ARGUMENT 2

ARGUMENT 6

I. Strictly Prohibiting "Multiple Reasonable Interpretations" Of Claims Under The Definiteness Requirement Of 35 U.S.C. § 112, ¶ 2 Would Severely Limit Inventors' Ability To Adequately Protect Inventions And Would Undermine The Balance Of The Patent System. 6

A. Nautilus' Proposed Standard Is Exceptionally Difficult To Satisfy And Inconsistent With Settled Practice 7

B. Nautilus' Proposed Standard Would Significantly Increase Patent Prosecution Costs. 11

C. Nautilus' Proposed Standard Would Have A Chilling Effect On The Patent System. 12

D. Nautilus' Proposed Standard Conflicts With The PTO's Practice. 14

II. In Resolving This Case, The Court Should Make Clear That The Patent Specification Will Frequently Clarify Claim Terms In A Manner That Renders Them Definite 18

A. Description Of Interval's Patents 19

B. Procedural History Of Interval's Lawsuit To Enforce Its Patents. 20

C. Interval's Lawsuit Demonstrates The Importance Of Referring To Intrinsic Evidence, Such As A Patent's Specification, To Evaluate The Definiteness Of Claim Terms. 23

CONCLUSION 27

TABLE OF AUTHORITIES

Cases

Bonito Boats, Inc. v. Thunder Craft Boats, Inc.,
489 U.S. 141 (1989) 12, 13

Deere & Co. v. Bush Hog, LLC,
703 F.3d 1349 (Fed. Cir. 2012) 25

Enzo Biochem, Inc. v. Applera Corp.,
599 F.3d 1325 (Fed. Cir. 2010) 26

Fuji Photo Film Co. v. ITC,
386 F.3d 1095 (Fed. Cir. 2004) 10

Hearing Components, Inc. v. Shure Inc.,
600 F.3d 1357 (Fed. Cir. 2010) 26

Hughes Aircraft Co. v. United States,
717 F.2d 1351 (Fed. Cir. 1983) 25

In re Bilski,
545 F.3d 943 (Fed. Cir. 2008) 8

Interval Licensing, LLC v. AOL, Inc.,
No. C10-1385MJP, 2013 WL 792791
(W.D. Wash. Feb. 28, 2013) 21, 22

Markman v. Westview Instruments, Inc.,
517 U.S. 370 (1996) 8, 9

Topliff v. Topliff,
145 U.S. 156 (1892) 8

United States v. Adams,
383 U.S. 39 (1966) 18

Young v. Lumenis, Inc.,
492 F.3d 1336 (Fed. Cir. 2007) 26

Statutes

35 U.S.C. § 6(a) 16

35 U.S.C. § 112, ¶ 2 ..... 6, 12

35 U.S.C. § 154(a)(2) 7

Other Authorities

Ex Parte Baker,
Appeal No. 2010-001513 (P.T.A.B. June 28, 2012) 17

Ex Parte Grant,
Appeal No. 2011-006841 (P.T.A.B. June 27, 2013) 16

Ex Parte Loo,
Appeal No. 2011-011015 (P.T.A.B. Mar. 4, 2014) 16

Ex Parte Mann,
Appeal No. 2009-011798 (P.T.A.B. Jan. 29, 2012) 15

Ex Parte Miyazaki,
Appeal No. 2007-3300, at 11-12 (B.P.A.I. Nov. 19, 2008) 14, 15

Paul R. Lawrence & Mark A. Abramson,
Paths to Making a Difference: Leading in Government (rev'd ed. 2011) 11

U.S. Patent & Trademark Office,
Manual of Patenting Examination Procedure (8th ed. Rev. 9, Aug. 2012) ..... passim

U.S. Patent No. 6,034,652
(filed Mar. 22, 1996) 19, 20, 21, 22

U.S. Patent No. 6,788,314
(filed Mar. 20, 2000) 19, 20, 21

INTEREST OF AMICUS CURIAE[1]

Amicus curiae Interval Licensing LLC (Interval) is the owner of patents invented at Interval Research Corporation (Interval Research), a private think tank founded in 1992 by Paul Allen and David Liddle to perform advanced research and development in the areas of information systems, communications, and computer science.[2] Interval Research employed over 110 of the world's leading scientists, physicists, and engineers, and obtained hundreds of patents before ceasing operations in the year 2004. Interval has a strong interest in ensuring that the substantial resources that Interval Research, its employees, and other inventors expended in research and development receive appropriate protection from the patent system.

Interval is presently litigating in the Federal Circuit the validity of claims in two of its patents, which a district court erroneously held indefinite. Interval thus has a particularly acute interest in the precise issue before the Court, as well as substantial experience with the practical realities of applying the standard for indefiniteness in the real world—both as an inventor and as a party defending its patents in litigation.

---

[1] Petitioner and respondent have both filed blanket letters of consent with the Court. No party or person other than *amicus* and its counsel authored any part of this brief or made a monetary contribution intended to fund the preparation or submission of this brief.

[2] Interval is controlled by Vulcan, Inc., the investing arm for Paul Allen.

SUMMARY OF ARGUMENT

Petitioner Nautilus, Inc.'s proposed standard for indefiniteness—under which an invention is patent-ineligible whenever a claim term "is susceptible of multiple reasonable interpretations to one skilled in the relevant art," Pet. Br. 22—finds no support in practice, precedent, or common sense. Its adoption would critically undermine the balance of the patent system by depriving inventors of the ability to protect their work.

First and foremost, the linguistic precision Nautilus demands is essentially impossible, which is why the patent system has never required it. Overwhelmingly, words are susceptible of multiple meanings, and patents routinely use language that might support more than one reasonable interpretation—or at least, language that an adversary may describe as susceptible of multiple interpretations. Nautilus' proposed standard transforms this inherent imprecision of language into a perpetual risk that a court will deem a patent claim indefinite.

Adopting Nautilus' proposed standard would thus call into question innumerable patents in every area of innovation, and would make patent prosecution exceedingly difficult. The risk is substantial because patents have lengthy lifespans. It is highly likely that during that time period, a motivated challenger will be able to conjure some new interpretation of a claim term that a court may regard as reasonable. This is especially the case in emerging technological fields, where the vocabulary that describes inventions grows more precise as the discipline matures. Nautilus' standard would make

it far more difficult for an inventor to obtain a patent, maintain its validity, and enforce it against an infringer—therefore undermining the value of both existing and future patents.

Nautilus' standard also conflicts with important and settled features of patent practice. For example, it is incompatible with the claim construction process, the purpose of which is to permit a court to evaluate various reasonable interpretations of a claim term and choose the best one. Nautilus' standard would render claim construction superfluous by requiring courts to reject, as indefinite, any claim that is susceptible of more than one reasonable interpretation in the first instance.

The upshot is that patent prosecution would become extremely difficult, and substantially more expensive. Inventors would likely resort to drafting more and more complex claims—making patents harder to understand, and far more costly to file. This would not only impose costs upon the inventors themselves (in the form of increased fees to attorneys and the U.S. Patent and Trademark Office (PTO)), but would also substantially increase the burden on the PTO to review labyrinthine submissions designed to address every possible embodiment of the invention.

Confronted with these challenges, at least some inventors will decide that the benefits of patent protection are likely to be so short-lived or uncertain that the effort and expense of seeking a patent in the first instance are not justified. That would deprive the public of valuable knowledge and slow the pace of innovation.

In the face of these negative consequences, Nautilus' efforts to synthesize its standard with current practice fall short. Contrary to Nautilus' submission, the PTO has consistently applied a far more permissive standard than Nautilus proposes here. The PTO thus does not find a patent claim term indefinite whenever it is "susceptible" of multiple reasonable interpretations. Instead, the PTO—consistent with the Federal Circuit and with common sense—finds a claim indefinite only if those interpretations are conflicting, or if the claim terms are so amorphous that they fail to provide any meaningful guidance. Even skilled lawyers routinely create ambiguity that is susceptible of multiple reasonable interpretations. Recognizing that claim language often may be construed in different ways, the PTO and the Federal Circuit focus on intrinsic evidence such as the specification to determine whether a term is so ambiguous as to invalidate the invention. This standard balances the public notice function of patents against the critical need to protect the value of inventions as technologies evolve.

Interval's own ongoing litigation illustrates all of these principles. Interval filed suit against several technology companies relating to Interval's patents (obtained in the year 2000) for an "attention manager," which is technology that presents information on a display, *e.g.*, a computer screen, in several ways—including alongside a user's primary interactions in "an unobtrusive manner that does not distract the user." The patent specification explains what the relevant claim terms mean.

The defendants in Interval's case implement pop-up notifications to users, often on smartphones,

informing them of new e-mails, text messages, and similar, alleging that these technologies infringe its attention manager patents. The defendants argued that the claim terms "unobtrusive" and "does not distract the user" are indefinite, citing factors—such as the color and size of the information displayed, and the attention span of a particular user—that have nothing to do with the claim terms as described in the patent specification. Nonetheless, the district court agreed with the defendants and held the claims indefinite.

In an appeal pending before the Federal Circuit, Interval argues that the district court erred by looking past the patent specification and importing its own subjective understandings of what it might mean for information to be "unobtrusive" or not "distracting." It argues that when a patent specification explains the meaning of claim terms, the public notice function of a patent has been achieved. In the face of that intrinsic evidence, a court cannot invalidate a patent because it can imagine multiple ways to interpret a claim term, or imagine a circumstance under which a term might be vague.

Interval's case is meaningfully different from the case before the Court in one critical respect: in this case, it is arguable that the patent specification fails to explain the nature of the spaced relationship claimed in the patent. That explanation may not have emerged until the reexamination process, where Dr. Lekhtman attempted to distinguish his invention from Fujisaki. But if Nautilus' standard is adopted, its effects will not be limited to cases like this one. Instead, it will invite further errors like the district

court's in Interval's case. This Court should therefore reject Nautilus' proposed standard and affirm. But even if it does not, it should decide this case narrowly to avoid prejudicing cases, like Interval's, in which the specification provides the information necessary to understand the allegedly indefinite claim terms. The Court should expressly clarify that when read in the light of the specification, a claim term that may be susceptible of more than one reasonable interpretation may nevertheless be definite for purposes of 35 U.S.C. § 112, ¶ 2.

ARGUMENT

I. Strictly Prohibiting "Multiple Reasonable Interpretations" Of Claims Under The Definiteness Requirement Of 35 U.S.C. § 112, ¶ 2 Would Severely Limit Inventors' Ability To Adequately Protect Inventions And Would Undermine The Balance Of The Patent System.

Nautilus argues that any time a claim term is susceptible of multiple reasonable interpretations, the claim is indefinite and therefore invalid. Respondent's brief ably explains why Nautilus' standard is contrary to the text of the Patent Act and this Court's precedents. That standard is also contrary to settled patent practice. Its adoption would make patent prosecution exceedingly difficult, and disrupt the balance of the patent system.

A. Nautilus' Proposed Standard Is Exceptionally Difficult To Satisfy And Inconsistent With Settled Practice.

If courts apply the standard as Nautilus has stated it, it will threaten the validity of innumerable existing patents, and make it nearly impossible for inventors and attorneys to have any confidence in future patents. Words, by their very nature, are subject to varying interpretations. A patent attorney drafting a claim cannot hope to foresee each and every potential interpretation that might be given to each claim term over the many years in which the patent is in force,[3] and then to decide which potential interpretations are reasonable and which are not. It is untenable to suggest that simply because a hostile third party can eventually conjure a meaning that differs from the meaning intended by the patentee (as evidenced by the intrinsic record) and from the meaning attributed by the PTO (which provides the basis for the presumption of validity), a court should invalidate a patent claim.

This Court has long been familiar with the exceptional difficulty that already exists in drafting claims that accurately describe an invention. The Court famously recognized many years ago that:

> [t]he specification and claims of a patent, particularly if the invention be at all

---

[3] Patents issued from applications filed after June 8, 1995, have a term of 20 years from the effective filing date. 35 U.S.C. § 154(a)(2); MPEP § 2701. Citations to the MPEP in this brief are to the 8th edition, revision 9 (August 2012).

> complicated, *constitute one of the most difficult legal instruments to draw with accuracy*, and in view of the fact that valuable inventions are often placed in the hands of inexperienced persons to prepare such specifications and claims, it is no matter of surprise that the latter frequently fail to describe with requisite certainty the exact invention of the patentee, and err either in claiming that which the patentee had not in fact invented, or in omitting some element which was a valuable or essential part of his actual invention.

Topliff v. Topliff, 145 U.S. 156, 171 (1892).

This difficulty has only grown with time. Patent claims "have become highly technical in many respects as the result of special doctrines relating to the proper form and scope of claims that have been developed by the courts and the Patent Office." *Markman v. Westview Instruments, Inc.*, 517 U.S. 370, 389 (1996) (citations omitted). Compounding this growing difficulty is the fact that, for many cutting edge technologies in this age of "subatomic particles and terabytes," *In re Bilski*, 545 F.3d 943, 1011 (Fed. Cir. 2008) (Rader, J., dissenting), at the time of drafting there may be no established words in the art that a patent attorney can rely upon to draft claims that precisely capture the intended invention.

Nevertheless, Nautilus asks this Court to impose its strict indefiniteness standard on top of these already-demanding requirements by requiring patent attorneys—at the threat of post-issuance invalidation—to somehow predict each and every interpretation that may be ascribed to their claims

that might be deemed "reasonable" by a court (perhaps a decade or longer in the future).

Nautilus' standard also clashes with patent practice in at least two uniquely damaging ways.

First, Nautilus' standard is so strict that it would render the *Markman* claim construction process obsolete, and would encourage parties to frustrate and manipulate that process as well. The purpose of the *Markman* process is for a judge to decide which of the proposed reasonable constructions of a patent term is correct. *See* 517 U.S. at 388. *Markman* hearings have thus played an integral role in fairly and accurately determining claim constructions in patent cases since *Markman* was decided.

If patent attorneys are required to draft claim terms with such exacting perfection that there can be only one reasonable interpretation, however, then there is no need for courts to construe the claims at all (other than for the exceedingly narrow purpose of rejecting unreasonable constructions).

On the other hand, Nautilus' standard also gives rise to the possibility that any time an adversary makes a good-faith argument in the *Markman* process that a claim means something other than that proposed by the patent holder, the claim is indefinite. Consequently, Nautilus' standard would encourage parties to attempt to frustrate the claim construction process by proposing as many diverse meanings as possible, in the hope that a court would find more than one "reasonable," and would therefore find the claim indefinite. *See Amicus* Br. of Am. Bar Ass'n 19-20 (arguing that Nautilus' standard would create an incentive for infringers to set forth multiple

constructions instead of a single "best" construction). That would undermine the purpose of the *Markman* process, upending patent litigation across the board—even in cases that today litigants do not conceive of as indefiniteness cases. Such a change highlights the very difficult, if not impossible, standard that Nautilus would have inventors and patent attorneys satisfy.

Second, Nautilus' standard risks undermining the validity of claims that describe multiple embodiments of a single invention. This is because when a single claim describes multiple *embodiments*, it is not clear that Nautilus' standard—which rejects as indefinite any claim susceptible of multiple reasonable *interpretations*—would regard the claim as indefinite.

Such claims, however, are common. Patent prosecutors attempt to draft claims that broadly cover the underlying inventive principle over a variety of embodiments, while avoiding covering the prior art. This process necessarily involves claim language covering a range of meanings. The result does not make a claim ambiguous; it simply makes the claim broad. *See, e.g.*, *Fuji Photo Film Co. v. ITC*, 386 F.3d 1095, 1106 (Fed. Cir. 2004) ("It is a familiar axiom of patent law, however, that the scope of the claims is not limited to the preferred embodiments described in the specification."); MPEP § 2173.02 (I) ("A broad claim is not indefinite merely because it encompasses a wide scope of subject matter . . .").

Nautilus' test, however, risks turning these axioms of patent law on their head, and effectively inserting a new narrowness requirement for patent claims. To the extent that Nautilus's proposed

standard can be read as prohibiting claims that describe multiple embodiments of an invention, it should be rejected outright.

In sum, patent prosecutors already face a daunting task under the current indefiniteness standard. Imposing Nautilus' proposed standard on inventors and their attorneys would make the task of drafting claims exceptionally difficult, if not impossible.

B. Nautilus' Proposed Standard Would Significantly Increase Patent Prosecution Costs.

By adding complexity to the process and creating incentives for applicants to claim every possible embodiment of their inventions, Nautilus' proposed standard would also dramatically increase attorney fees and costs. The billable time involved in drafting and prosecuting dozens or even hundreds of claims per patent application, in addition to ensuring that each claim term has one and only one reasonable interpretation, would become prohibitively expensive for many inventors, particularly small entities.

In addition, a significant expansion in the number of claims filed per application would overload the already-backlogged PTO. *See* Paul R. Lawrence & Mark A. Abramson, *Paths to Making a Difference: Leading in Government* 111-14 (rev'd ed. 2011) (detailing the PTO's backlog woes). Examiners would now be required to examine dozens or hundreds of claims per patent application, ensuring that none of them has a single claim term with more than one reasonable interpretation. If an examiner were to discover more than one reasonable interpretation in

any claim, significant PTO and attorney time would be spent debating whether the examiner's multiple interpretations are truly reasonable—costs that would be multiplied many times over if the examiner finds multiple reasonable interpretations in multiple claims. Also, filing numerous claims inevitably results in restrictions, which requires filing divisional applications and further costs. This result also prolongs prosecution and runs counter to the PTO's goal of more efficient and compact prosecution. Adopting Nautilus' standard would clog the PTO with scores of claims and continuing applications, and would delay protection for inventions.

C. Nautilus' Proposed Standard Would Have A Chilling Effect On The Patent System.

The patent system is premised on encouraging inventors to willingly disclose details of inventions in exchange for a limited-time monopoly that prevents others from making, using, selling, and importing that which infringes the claims of the patent. *See Bonito Boats, Inc. v. Thunder Craft Boats, Inc.*, 489 U.S. 141, 150-51 (1989) ("The federal patent system thus embodies a carefully crafted bargain for encouraging the creation and disclosure of new, useful, and nonobvious advances in technology and design in return for the exclusive right to practice the invention for a period of years.").

A stricter interpretation of § 112, ¶ 2 would undermine that tradeoff and cause a chilling effect on the patent system, because—unless the inventor's attorney succeeds in the tremendously difficult task of drafting claims having one and only one reasonable

interpretation—the inventor will have disclosed the details of his invention to the world but will receive in exchange only a patent that is more likely to be invalidated when scrutinized post-issuance (with an adversary incentivized to scour the intrinsic record and a stack of dictionaries in search of any alternative meaning that might pass a "reasonableness" test) under Nautilus' proposed standard.

This is no idle threat. Patent attorneys and PTO examiners will have difficulty identifying any and all reasonable interpretations of a claim and amending the claims to exclude all such interpretations. And new potential interpretations may arise after the patent issues in response to further developments in related technology areas. During post-issuance litigation, a hostile third party with large numbers of attorneys spending many hours on the case will have little trouble conjuring some reasonable interpretation that the time-pressured attorney and examiner did not. Indeed, there will be few cases in which a hostile third party cannot identify at least one alternative, reasonable construction for a claim term. If that suffices to render the claim indefinite, inventors will no longer be incentivized to disclose their inventions to the world. *See Bonito Boats*, 489 U.S. at 150-51.

And once a patent issues, the already-high cost of patent litigation will increase further. Lawyers trying to invalidate a patent concoct arguments showing that a term may be susceptible of multiple reasonable meanings, and lawyers for the patent holder attempt to fend off such requests. Instead of focusing on the proper inquiry of what a term

actually means, both sides and the court instead will turn to the collateral question of whether a term could have multiple reasonable interpretations—even if only one is correct.

D. Nautilus' Proposed Standard Conflicts With The PTO's Practice.

In an effort to minimize the negative consequences of applying its standard, Nautilus cites the PTO's purported application of its proposed indefiniteness standard to argue that applying the same standard in court would impact inventors only minimally. Pet. Br. 45. Specifically, Nautilus cites *Ex Parte Miyazaki*, Appeal No. 2007-3300, at 11-12 (B.P.A.I. Nov. 19, 2008) and MPEP § 2173.02 (I) as requiring examiners at the PTO to use Nautilus' proposed indefiniteness standard when examining patent applications. In so doing, however, Nautilus overstates the impact that *Miyazaki* and MPEP § 2173.02 (I) have had on the PTO's handling of indefiniteness rejections, and it provides no evidence showing how the PTO enforces the standard as a practical matter.

Contrary to Nautilus' characterizations, both *Miyazaki* and MPEP § 2173.02 (I) contain permissive language that suggests a judicious and reasonable application of the standard. *See Miyazaki*, Appeal No. 2007-3300, at 11-12 (stating that the PTO "is justified" in deeming a patent indefinite if it is amenable to two or more plausible constructions); MPEP § 2173.02 (I) (stating that a rejection for indefiniteness is only appropriate if a person of ordinary skill in the art necessarily "would read it with more than one reasonable interpretation").

These word choices are important—*Miyazaki* never requires the PTO to reject a claim merely because multiple reasonable interpretations are possible, and the MPEP does not give the examiner license to reject claims as indefinite merely because a person of ordinary skill in the art *could* come up multiple interpretations if given an incentive to do so (*e.g.*, invalidating a patent asserted against him or her).

Consistent with the permissive language of *Miyazaki* and MPEP § 2173.02 (I), the PTO in practice applies *Miyazaki* strictly to find patent terms indefinite only where a claim limitation evokes two entirely inconsistent or irreconcilable things or where a claim limitation is so amorphous or undefined that lacks any apparent meaning. *See, e.g.*, *Ex Parte Mann*, Appeal No. 2009-011798, at 7 (P.T.A.B. Jan. 29, 2012) ("Because claim 29 is amenable to two reasonable *and inconsistent* meanings, it is indefinite.") (emphasis added). The PTO does not routinely reject claims as indefinite simply because the claim—without reference to the specification—allows for a range of possible meanings that broadly cover a variety of embodiments relating to a common inventive principle. Only where the possible meanings are contradictory or incompatible with each other or simply indeterminable does the PTO impose this requirement.[4]

---

[4] The American Intellectual Property Law Association agrees: "To show that the claim does not have an established meaning, the constructions proposed by each party must be equally valid under the claim's phrasing and in conflict." *Amicus* Br. of Am. Intellectual Prop. Law Ass'n 12.

A review of recent Patent Trial and Appeal Board (PTAB)[5] decisions citing *Miyazaki* from 2013 and 2014 confirms that the PTO applies the indefiniteness requirement in a manner substantially different from that suggested by Nautilus. In many of these cases, the PTAB applied the stricter *Miyazaki* standard because the claim language contained syntax errors that could not be resolved and thus gave rise to multiple conflicting interpretations. In the remaining cases, the claim language contained terms that were so open-ended that—even in light of the specification—their metes and bounds could not reasonably be determined. For instance, in a recent decision citing *Miyazaki*, the PTAB rejected a claim as indefinite under the stricter standard because the claim contained a modifying phrase whose object could not be determined. *See Ex Parte Loo*, Appeal No. 2011-011015, at 10-11 (P.T.A.B. Mar. 4, 2014). In another recent case, the PTAB issued an indefiniteness rejection because the claims contained the phrase "expanded rear end" but did not identify what the rear end was "expanded" relative to, nor did the specification provide helpful guidance. *Ex Parte Grant*, Appeal No. 2011-006841, at 3-5 (P.T.A.B. June 27, 2013). And the PTAB has found claims indefinite when they use terms of degree without any helpful guidance from the specification to determine the bounds of those terms. *See Ex Parte Baker*, Appeal No. 2010-001513, at 6-8

---

[5] Effective September 2012, the PTAB replaced the Board of Patent Appeals and Interferences in accordance with the America Invents Act. 35 U.S.C. § 6(a).

(P.T.A.B. June 28, 2012). No recent PTAB case citing *Miyazaki*, however, has applied the standard in the sweeping manner that Nautilus proposes.

If the PTO had been applying the *Miyazaki* standard as strictly as Nautilus suggests, its long-standing practice of determining the "broadest reasonable construction" of a claim during examination, MPEP § 2111, would effectively have been eviscerated. After all, any claim term that has a "broadest reasonable construction" must, by definition, have more than one reasonable interpretation. Given that the PTO evaluates patentability by applying the "broadest reasonable construction" standard to literally scores of patent applications every day, one would expect that a strict application of the *Miyazaki* standard as Nautilus proposes would result in vast numbers of patent applications being rejected on indefiniteness grounds. But Nautilus has not provided any evidence that this is the case.

Thus, Nautilus proposes a stricter standard than the *Miyazaki* standard applied at the PTO—one that would have substantially greater consequences for the ability to draft claim terms than Nautilus suggests. What Nautilus has in mind with a sweeping prohibition of "multiple reasonable interpretations" is inconsistent with and is much more restrictive than the present reality at the PTO. Adopting Nautilus' proposed standard would thus mark a significant and ill-advised departure from patent prosecution practice as it exists today.

II. In Resolving This Case, The Court Should Make Clear That The Patent Specification Will Frequently Clarify Claim Terms In A Manner That Renders Them Definite.

The foregoing establishes some of the risks inherent in adopting sweeping changes to the well-established standard for indefiniteness. As a further illustration, the application of that standard is currently at issue in a Federal Circuit appeal between Interval and several technology companies. *See Interval Licensing LLC v. AOL, Inc., et al.*, Nos. 2013-1282, -1283, -1284, -1285 (Fed. Cir.). That litigation is an important illustration of the legal question presented by this case because the specification in Interval's patents contains the information necessary to establish the scope of Interval's invention. Here, by contrast, Nautilus argues that information was missing until Dr. Lekhtman attempted to distinguish his invention from the Fujisaki patent during the reexamination process.[6] However this Court decides the case before it, it should refrain from announcing a rule that

---

[6] Interval is not alone in recognizing the importance of the specification. Nautilus itself concedes, as it must, that "[c]laims . . . must be 'construed in light of the specifications.'" Pet. Br. 35 (quoting *United States v. Adams*, 383 U.S. 39, 48-49 (1966)). It also argues that the Lekhtman patent's claims are indefinite because of "the absence in the specification of any concrete description or illustration of the necessary spacing." *Id.* 52. Dr. Chakrabarty likewise emphasizes "the complementary roles of the specification and the claims." *Amicus* Br. of Dr. Ananda M. Chakrabarty 4; *see also id.* 34 (arguing that Lekhtman's invention was not "disclosed in the specification").

would undermine the many patents—like Interval's—that contain specifications providing substantial guidance on the meaning of claim terms.

A. Description Of Interval's Patents.

In the years 1996 and 2000, as the Internet boom began, Interval's predecessor in interest, Interval Research, filed applications for two patents—U.S. Patent Nos. 6,034,652 (filed Mar. 22, 1996) (the '652 patent) and 6,788,314 (filed Mar. 20, 2000) (the '314 patent)—for an "attention manager," which "presents information to a person in the vicinity of a display device that engages at least the peripheral attention of the person." '652 patent, at [57]; '314 patent, at [57]. In layman's terms, the attention manager displays information to the user of a display—*e.g.*, a computer display, or a cellular phone display—that the user may find interesting, even if the user did not necessarily request that specific information at that specific time. As the patents explain, "[g]iven the extent to which computers now permeate society . . . there is increasing recognition of the capability of using computers, and, in particular, computers (and other devices) that are interconnected in a network, as an information dissemination tool that can satisfy the interests of both information providers and information consumers." *E.g.*, '652 patent col. 1 ll. 19-27.

The '314 and '652 patents have substantively identical specifications, which explain that the attention manager "makes use of the 'unused capacity' of the display device" to display pertinent

additional information to users. *Id.* at col. 2 ll. 7-9.[7] The specification provides two examples of "unused capacity." First, the attention manager can display information "while the apparatus (*e.g.*, computer) is operating, but during inactive periods (*i.e.*, when a user is not engaged in an intensive interaction with the apparatus)." *Id.* at col. 2 ll. 9-12. Second, the attention manager can display information "during active periods (*i.e.*, when a user is engaged in an intensive interaction with the apparatus), but in an unobtrusive manner that does not distract the user from the primary interaction with the apparatus (*e.g.*, the information is presented in areas of a display screen that are not used by displayed information associated with the primary interaction with the apparatus)." *Id.* at col. 2 ll. 12-19.

Of course, the patents also claim these features. Thus, they claim that the attention manager will, among other things, "selectively display, in an unobtrusive manner that does not distract a user of the apparatus from a primary interaction with the apparatus, an image or images generated from a set of content data." *E.g.*, *id.* at col. 29 ll. 41-55; *see also* '314 patent col. 29 ll. 60-67.

B. Procedural History Of Interval's Lawsuit To Enforce Its Patents.

In August 2010, Interval filed suit against various technology companies, alleging, among other things, that their technologies for displaying pop-up

---

[7] Because the specifications are substantively identical, this brief will cite to the '652 patent for the sake of brevity.

notifications to users infringe on its patents. While such notifications were quite novel when Interval patented the technology, they became ubiquitous in the smartphone era as a means to display new e-mails, text messages, social media updates, breaking news, and similar snippets of useful information in a non-distracting manner. Because these technologies display information alongside the user's primary activity, Interval alleged that they infringed the version of its invention that displays information "during active periods . . . but in an unobtrusive manner that does not distract the user from the primary interaction with the apparatus (e.g., the information is presented in areas of a display screen that are not used by . . . the primary interaction.)" '652 patent col. 2 ll. 12-19. The litigation was stayed after the defendants filed reexamination requests at the PTO. The PTO subsequently confirmed the patentability of the asserted claims in both the '314 patent and the '652 patent—the former in an adversarial *inter partes* proceeding brought by one of the defendants.

The district court then lifted the stay, and the case proceeded to claim construction. The defendants argued that the phrase "in an unobtrusive manner that does not distract a user of the apparatus from a primary interaction with the apparatus" was indefinite. *See Interval Licensing, LLC v. AOL, Inc.*, No. C10-1385MJP, 2013 WL 792791, at *6 (W.D. Wash. Feb. 28, 2013). Interval argued, by contrast, that "in an unobtrusive manner that does not distract a user of the apparatus from a primary interaction with the apparatus" means "[d]uring a user's primary interaction with the apparatus and the information is

presented in an area of the display screen not substantially used by displayed information associated with the primary interaction of the user." *Id.*

The district court agreed with the defendants, holding that the claim term "in an unobtrusive manner that does not distract a user of the apparatus from a primary interaction with the apparatus" was indefinite, and that a means-plus-function limitation containing that same term was likewise indefinite due to the lack of a sufficient description of the corresponding structure in the specification. *See id.* at *3-*5. The court reasoned that the phrase "in an unobtrusive manner" is indefinite because "the same image may or may not be considered unobtrusive depending on a variety of factors, such as color, size, and information displayed." *Id.* at *3. It also concluded that the phrase "does not distract" is indefinite "because whether something distracts a user from his primary interaction depends on the preferences of the particular user and the circumstances under which any single user interacts with the display." *Id.* at *4.

Interval had addressed this contention by pointing to the specification of its patents. The patents explained that displaying information in an unobtrusive, non-distracting manner meant presenting the information "in areas of a display screen that are not used by displayed information associated with the primary interaction with the apparatus." *E.g.*, '652 patent col. 2 ll. 17-19; *see also id.* at col. 6 ll. 38-45. The patents further explain that the invention thus utilizes the "unused capacity" of the computer in order to display information to the

user, and "unused capacity" is "defined broadly to include, for example, . . . spatial . . . dimensions," *i.e.*, unused space on a display screen. *Id.* at col. 6 ll. 45-51. The district court, however, disagreed, and ruled the claim terms indefinite.

On appeal, Interval argues that its claims cannot be deemed indefinite in light of the specification. Specifically, it argues that "[a] display in an 'unobtrusive manner that does not distract a user' is one positioned in an area of the display screen not substantially used by the user's primary activity." Br. for Interval 22, *Interval Licensing LLC v. AOL, Inc. et al.*, No. 2013-1282 (Fed. Cir.). It further argues that the district court erred by focusing on a multitude of factors that the specification never discusses—*e.g.*, the color, shape, and size of the information displayed, or whether the user of the device has a particularly high or low ability to focus. *See id.* 28-30. These factors—which may relate to whether an image is "unobtrusive" or "distracting" in a colloquial sense—were never relevant to Interval's invention and do not appear in the specification. The district court erred by reading those terms without reference to the specification.

C. Interval's Lawsuit Demonstrates The Importance Of Referring To Intrinsic Evidence, Such As A Patent's Specification, To Evaluate The Definiteness Of Claim Terms.

Interval's appeal highlights the dangers posed by Nautilus' standard for indefiniteness. Adopting Nautilus' standard—which requires courts to invalidate a patent any time multiple reasonable

interpretations of a claim term are possible—would invite errors like the district court's error in Interval's case. It would encourage courts to inject their own uncertainty about the meaning of claim terms into a patent dispute, focusing on irrelevant contingencies in order to find vagueness where none exists. Indeed, under Nautilus' standard, if any expert testifies that a term has multiple reasonable meanings, a question of indefiniteness may exist.

As the American Intellectual Property Law Association explains, "[a] patent claim is part of a larger specification of the invention . . . Understanding the scope of a patent claim thus requires . . . a jurist asked to rule on invalidity [] to read the claim language in light of the entire specification." *Amicus* Br. of Am. Intellectual Prop. Law Ass'n 5-6. Nautilus' standard, however, demands such a high degree of certitude that a court could always find indefiniteness—regardless of what a patent's specification says. A court could do so by doing what the district court did in Interval's case: either hold that the specification does not address some extraneous source of ambiguity concocted by an infringer, or hold that the specification itself is susceptible to multiple reasonable interpretations, so that it does not establish that the claim terms can only be construed one way.

Thus, under Nautilus' standard, the mere fact that terms like "unobtrusive" and "does not distract" are susceptible of multiple reasonable meanings—even if those meanings do not contradict each other, and even if the patent specification sheds substantial light on the meaning of those terms in the context of the relevant invention—could be sufficient to render

the claims indefinite. As a result, Interval's important patent, and countless others like it, could be invalidated. As the American Bar Association explains, Nautilus' "inflexible standard" would undermine a "patent system that protects innovation." *Amicus* Br. of Am. Bar. Ass'n 10.

The problem would be especially acute in cases, like Interval's, in which the inventor obtained a patent while the entire genre of technology was still nascent and experiencing substantial breakthrough and upheaval, so that the relevant vocabulary was underdeveloped. In such cases, it would be relatively easy, in hindsight, for competitors to recharacterize a patent as being vague because it appears to be so in light of new, more sophisticated terminology. *See, e.g.*, *Hughes Aircraft Co. v. United States*, 717 F.2d 1351, 1362 (Fed. Cir. 1983) (explaining that a patentee is not required to "predict all future developments which enable the practice of his invention in substantially the same way.").

But the difficulties would by no means be limited to cases involving nascent technologies. Indeed, almost any patent that uses an adjective in one of its claims would face the threat of subsequent invalidation under Nautilus' standard, because reasonable minds frequently can apply multiple interpretations to almost any adjective. Innumerable patents include terms like "easily," "readily," "substantially," and "near," all of which could be interpreted in multiple ways, and all of which have been found valid when read in light of the relevant specifications. *See, e.g.*, *Deere & Co. v. Bush Hog, LLC*, 703 F.3d 1349, 1360 (Fed. Cir. 2012); *Hearing Components, Inc. v. Shure Inc.*, 600 F.3d 1357, 1366

(Fed. Cir. 2010); *Enzo Biochem, Inc. v. Applera Corp.*, 599 F.3d 1325, 1336 (Fed. Cir. 2010); *Young v. Lumenis, Inc.*, 492 F.3d 1336, 1346-47 (Fed. Cir. 2007). The public does not gain by effectively banning such words from patents. Indeed, in many inventions, the amount of precision is irrelevant. And, as explained in Part I, such a rule would deter patent applications and disserve innovation.

Consequently, this Court should tread lightly before accepting any change to the standard for indefiniteness. Indeed, the best change in this case is no change, as the claims construction process and a focus on the patent specification already solve the public notice concerns raised by Nautilus and its *amici*. At a minimum, however, this Court should continue to allow litigants to define patent terms by reference to the intrinsic evidence of a patent such as the specification. If it is possible to glean a meaning of the term from the intrinsic evidence, a patent claim term is not indefinite.

CONCLUSION

For the foregoing reasons, the court of appeals' decision should be affirmed.

Respectfully submitted,

MICHAEL HEIM
NATHAN J. DAVIS
DOUGLAS R. WILSON
NICK PATEL
HEIM, PAYNE & CHORUSH LLP
600 Travis St., Suite 6710
Houston, TX 77002

JUSTIN A. NELSON
SUSMAN GODFREY L.L.P.
1201 Third Avenue
Suite 3800
Seattle, WA 98101

THOMAS C. GOLDSTEIN
Counsel of Record
TEJINDER SINGH
GOLDSTEIN & RUSSELL, P.C.
5225 Wisconsin Ave., N.W.
Suite 404
Washington, DC 20015
(202) 362-0636
tg@goldsteinrussell.com

MAX L. TRIBBLE, JR.
SUSMAN GODFREY L.L.P.
1000 Louisiana St.
Suite 5100
Houston, TX 77002

April 2, 2014

AMICUS CURIAE BRIEF

RECORD
AND
BRIEFS

Supreme Court, U.S.
FILED
MAR - 3 2014
OFFICE OF THE CLERK

No. 13-369

IN THE
Supreme Court of the United States

NAUTILUS, INC.,
Petitioner,

v.

BIOSIG INSTRUMENTS, INC.,
Respondent.

On Writ Of Certiorari To The United States Court Of Appeals For The Federal Circuit

BRIEF *AMICUS CURIAE* OF PROFESSOR PETER S. MENELL IN SUPPORT OF NEITHER PARTY

PETER S. MENELL
Counsel of Record
Koret Professor of Law
and Director
BERKELEY CENTER FOR LAW
& TECHNOLOGY
UC BERKELEY SCHOOL OF LAW
Boalt Hall
Berkeley, CA 94720
(510) 642-5489
pmenell@law.berkeley.edu

WILSON-EPES PRINTING CO., INC. – (202) 789-0096 – WASHINGTON, D. C. 20002

Library of Congress
Law Library

TABLE OF CONTENTS

Page

TABLE OF CONTENTS i

TABLE OF AUTHORITIES ii

INTEREST OF *AMICUS CURIAE* 1

SUMMARY OF ARGUMENT 3

ARGUMENT 4

I. THE HISTORICAL DEVELOPMENT OF STANDARDS FOR PATENT CLAIM CLARITY 16

A. 1790–1836: THE "INVENTION" AND EMERGENCE OF PATENT CLAIMS. 17

B. THE 1836 PATENT ACT. 22

C. THE 1870 PATENT ACT. 24

D. THE 1952 PATENT ACT AND THE ORIGINS OF THE FEDERAL CIRCUIT'S "INSOLUBLY AMBIGUOUS" STANDARD. 33

II. THE APPROPRIATE STANDARD FOR PATENT CLAIM INDEFINITENESS. 36

CONCLUSION 40

TABLE OF AUTHORITIES

Page(s)

CASES

ACS Hosp. Sys., Inc. v. Montefiore Hosp.,
732 F.2d 1572 (Fed. Cir. 1984) 35

Athletic Alts., Inc. v. Prince Mfg., Inc.,
73 F.3d 1573 (Fed. Cir. 1996) 34, 35, 36

Bilski v. Kappos,
130 S. Ct. 3218 (2010) 8

Burns v. Meyer,
100 U.S. 671 (1879) 30

Carnegie Steel Co. v. Cambria Iron Co.,
185 U.S. 403 (1902) 30

Datamize, LLC v. Plumtree Software, Inc.,
417 F.3d 1342 (Fed. Cir. 2005) 38

eBay Inc. v. MercExchange, L.L.C.,
547 U.S. 388 (2006) 8

Eibel Process Co. v. Minn. & Ontario Paper Co.,
261 U.S. 45 (1923) 31

Enzo Biochem, Inc. v. Applera Corp.,
605 F.3d 1347 (Fed. Cir. 2010) 38

Evans v. Eaton,
20 U.S. (7 Wheat.) 356 (1822) 18

Ex parte Cont'l Windmill Co.,
1870 Dec. Comm'r Pat. 74 25

Ex parte Eagle,
1870 Dec. Comm'r Pat. 137 25

Ex parte Perry & Lay, .
1869 Dec. Comm'r Pat. 1 26

Ex parte Rubens & Co.,
1869 Dec. Comm'r Pat. 107 25

Exxon Research & Eng'g Co. v. United States,
265 F.3d 1371 (Fed. Cir. 2001).....33, 34, 37, 40

Festo Corp. v. Shoketsu Kinzoku Kogyo Kabushiki Co.,
535 U.S. 722 (2002).....40

Gen. Elec. Co. v. Wabash Appliance Corp.,
304 U.S. 364 (1938).....31, 37

Graver Tank & Mfg. Co. v. Linde Air Prods. Co.,
339 U.S. 605 (1950).....40

Isaacs v. Cooper,
13 F. Cas. 153 (C.C.D. Pa. 1821)
(No. 7,096) 21

Keystone Bridge Co. v. Phoenix Iron Co.,
95 U.S. 274 (1877).....28, 29

KSR Int'l Co. v. Teleflex Inc.,
550 U.S. 398 (2007).....8

Lowell v. Lewis,
15 F. Cas. 1018 (C.C.D. Mass. 1817)
(No. 8,568) 20

Markman v. Westview Instruments, Inc.,
517 U.S. 370 (1996) 6

Merrill v. Yeomans,
94 U.S. 568 (1876) 28, 29, 38, 41

Microsoft Corp. v. AT&T Corp.,
550 U.S. 437 (2007) 8

Microsoft Corp. v. i4i Ltd. P'ship,
131 S. Ct. 2238 (2011) 8

Modine Mfg. Co. v. U.S. Int'l Trade Comm'n,
75 F.3d 1545 (Fed. Cir. 1996) 34, 35

Morton Int'l Inc. v. Cardinal Chem. Co.,
5 F.3d 1464 (Fed. Cir. 1993) 34

Odiorne v. Winkley,
18 F. Cas. 581 (C.C.D. Mass. 1814)
(No. 10,432) 19, 26

Orthokinetics, Inc. v. Safety Travel Chairs, Inc.,
806 F.2d 1565 (Fed. Cir. 1986) 34

Permutit Co. v. Graver Corp.,
284 U.S. 52 (1931) 31, 37

Seattle Box Co., Inc. v. Indus. Crating & Packing, Inc.,
731 F.2d 818 (Fed. Cir. 1984) 34

State Street Bank & Trust Co. v. Signature Fin. Group, Inc.,
149 F.3d 1368 (Fed. Cir. 1998) 6

United Carbon Co. v. Binney & Smith Co.,
317 U.S. 228 (1942) 31, 32, 33, 38

Washburn v. Gould,
29 F. Cas. 312 (C.C.D. Mass. 1844)
(No. 17,214) 24

Whittaker Corp. by Technibilt Div. v. UNR Indus., Inc.,
911 F.2d 709 (Fed. Cir. 1990) 35

Whittemore v. Cutter,
29 F. Cas. 1123 (C.C.D. Mass. 1813)
(No. 17,601) 19

Winans v. Denmead,
56 U.S. (15 How.) 330 (1853) 27, 28

Wyeth v. Stone,
30 F. Cas. 723 (C.C.D. Mass. 1840)
(No. 18,108) 24, 26

STATUTES

35 U.S.C. § 103 (2011) 35

35 U.S.C. § 112(b) (2011) .....*passim*

Leahy-Smith America Invents Act of 2011, Pub. L. No. 112-29, 125 Stat. 284 (2011) 8

Patent Act of 1790, ch. 7 § 2, 1 Stat. 109.....17, 18

Patent Act of 1793, ch. 11 § 3, 1 Stat. 318.....18, 20

Patent Act of 1836, ch. 357, § 6, 5 Stat. 117.....23

Patent Act of 1870, ch. 230, § 26, 16 Stat. 198.....25

OTHER AUTHORITIES

2 William C. Robinson, *The Law of Patents for Useful Inventions* § 504 (Boston, Little, Brown & Co. 1890).....30

Chisum On Patents § 8.02[3] 30

David Pressman, *Patent it Yourself* 204 (16th ed. 2012).....10

Demian McLean, Amazon.com Review, http://www.amazon.com/Rembrandts-Attic-Unlocking-Hidden-Patents/dp/0875848990.....5

Dot-com bubble, Wikipedia, http://en.wikipedia.org/wiki/Dot-com_bubble.....4

Exec. Office of the President, *Patent Assertion and U.S. Innovation* (2013) 9

Fed. Trade Comm'n, *The Evolving IP Marketplace: Aligning Patent Notice and Remedies with Competition* (2011).....12

Fed. Trade Comm'n, *To Promote Innovation: The Proper Balance of Competition and Patent Law and Policy* (Oct. 2003).....8

George F. Wheeler, *Creative Claim Drafting: Claim Drafting Strategies, Specification Preparation, and Prosecution Tactics*, 3 J. Marshall Rev. Intell. Prop. L. 34 (2003) 10

George Ticknor Curtis, *A Treatise on the Law of Patents for Useful Inventions in the United States of America* § 220.....24, 27

J. Jonas Anderson & Peter S. Menell, *Informal Deference: An Historical, Empirical, and Normative Analysis of Patent Claim Construction*, 108 Nw. U. L. Rev. 1 (2014) 10, 25

James Ware & Brian Davy, *The History, Content, Application and Influence of the Northern District of California's Patent Local Rules*, 25 Santa Clara Computer & High Tech. L.J. 965 (2009).....6

Jeffrey A. Lefstin, *The Formal Structure of Patent Law and the Limits of Enablement*, 23 Berkeley Tech. L.J. 1141 (2008).....28

Jeffrey G. Sheldon, *How to Write a Patent Application* § 6.5.19 (2005) 10

John M. Golden, *Construing Patent Claims According to Their "Interpretive Community" A Call for an Attorney-Plus-Artisan Perspective*, 21 Harv. J.L. & Tech 322 (2008) 39

John Ruggles, *Report of the Select Committee Appointed to Take Into Consideration the State and Condition of the Patent Office*, S. Doc. No. 24-338 (1836) 22

Karl B. Lutz, *Evolution of the Claims of U.S. Patents*, 20 J. Pat. Off. Soc'y 134 (1938) ..... *passim*

Kevin G. Rivette & David Kline, *Rembrandts in the Attic: Unlocking the Hidden Value of Patents* (1999) 4

Mark A. Lemley, *Rational Ignorance at the Patent Office*, 95 Nw. U. L. Rev. 1495 (2001) 7, 14

Michael Risch, *The Failure of Public Notice in Patent Prosecution*, 21 Harv. J.L. & Tech. 179 (2007) 10

N.J. Brumbaugh, *History and Purpose of Claims in United States Patent Law*, 14 J. Pat. Off. Soc'y 273 (1932) 22, 23

Nat'l Research Council, Nat'l Acads. of Sci., *A Patent System for the 21st Century* (Stephen A. Merrill, Richard C. Levin & Mark B. Myers eds., 2004) 8

Patent Litigation and Innovation Act of 2013, H.R. 2639, 113th Cong. (2013).....9

Peter S. Menell & Michael J. Meurer, *Notice Failure and Notice Externalities*, 5 J. Legal Analysis 1 (2013) 11

Peter S. Menell, *It's Time to Make Vague Software Patents More Clear*, Wired (Feb. 7, 2013, 4:10 PM), http://www.wired.com/opinion/2013/02/its-time-to-make-vague-software-patents-more-clear/ 15

Peter S. Menell, Lynn H. Pasahow, James Pooley, & Matthew D. Powers, *Patent Case Management Judicial Guide* (Federal Judicial Center 1st ed. 2009, 2d ed. 2012 with Steven C. Carlson and Jeffrey G. Homrig) 2

Peter S. Menell, Matthew D. Powers & Steven C. Carlson, *Patent Claim Construction: A Modern Synthesis and Structured Framework*, 25 Berkeley Tech. L.J. 711 (2010).....9

Peter S. Menell, *Promoting Patent Claim Clarity* (Nov. 1, 2012), http://papers.ssrn.com/sol3/papers.cfm?abstract_id=2171287 15

Peter S. Menell, *The Mixed Heritage of Federal Intellectual Property Law and Ramifications for Statutory Interpretation, in Intellectual Property and the Common Law*, (Shyamkrishna Balganesh ed.) (2013).....19

Press Release, White House, *FACT SHEET: White House Task Force on High-Tech Patent Issues*, (Jun. 4, 2013), *available at* http://www.whitehouse.gov/the-press-office/2013/06/04/fact-sheet-white-house-task-force-high-techpatent-issues 9

R. Carl Moy, *1 Moy's Walker on Patents* § 4:2 (4th ed. 2006).....24

R. Polk Wagner, *Understanding Patent-Quality Mechanisms*, 157 U. Pa. L Rev. 2135 (2009).....11

Request for Comments on Preparation of Patent Applications, 78 Fed. Reg. 2960 (Jan. 15, 2013)...14

Ridsdale Ellis, *Patent Claims* §§ 3–5 (1949) 23

Robert D. Fish, *Strategic Patenting* (2007) 10

Robert P. Merges, *As Many As Six Impossible Patents Before Breakfast: Property Rights for Business Concepts and Patent System Reform*, 14 Berkeley Tech. L.J. 577 (1999).....6

Stephen M. McJohn, *Patents: Hiding from History*, 24 Santa Clara Computer & High Tech L.J. 961 (2008) 11

Stopping the Offensive Abuse of Patents Act (STOP Act), H.R. 2766, 113th Cong. (2013) 9

Thomas P. Jones, *Information to Persons Applying for Patents, or Transacting Other Business at the Patent Office*, 6 Franklin J. & Am. Mechanic's Mag. 332 (1828) 22

U.S. Patent & Trademark Office, *A Patent and Trademark Office Review: Creating a Patent and Trademark System for the 21st Century, Fiscal Year 1997* (1997) 6

U.S. Patent & Trademark Office, U.C. Berkeley Software Partnership Meeting (Oct. 17, 2013), *available at* http://www.uspto.gov/patents/init_events/sw_partnership_20131017_ucberkely.jsp 15

William Redin Woodward, *Definiteness and Particularity in Patent Claims*, 46 Mich. L. Rev. 755 (1948) 18, 20, 24, 26

INTEREST OF *AMICUS CURIAE*[1]

I am a law professor who studies and teaches intellectual property law. I hold a law degree and a doctorate degree in economics. Beginning in law school, I have focused a significant portion of my research on legal protection for computer software, innovation policy, and intellectual property law generally. Soon after joining the University of California at Berkeley School of Law faculty in 1990, I laid the groundwork to establish the Berkeley Center for Law & Technology (BCLT). Since its founding in 1995, BCLT has sought to foster the beneficial and ethical understanding of intellectual property (IP) law and related fields as they affect public policy, business, science and technology through a broad range of public policy conferences, collaborations with government agencies (e.g., U.S. Patent & Trademark Office, Federal Trade Commission), interactions with intellectual property practitioners and technology companies, and research and educational initiatives. BCLT

---

[1] Pursuant to Sup. Ct. R. 37.6, amicus notes that no counsel for a party authored this brief in whole or in part, and no counsel or party made a monetary contribution intended to fund the preparation or submission of this brief. No person other than amicus curiae made a monetary contribution to its preparation or submission. Petitioners and Respondents have consented to the filing of this brief through blanket consent letters filed with the Clerk's Office.

has provided me with a valuable ongoing vantage point for viewing the evolution of the high technology field as well as the challenges posed by legal protection for computer software for inventors, start-up companies, entrepreneurs, established technology companies, patent professionals, government officials, jurists, and the public.

One of my early initiatives at BCLT was to reach out to the Federal Judicial Center to offer assistance in preparing judges to handle the growing wave of intellectual property litigation in the "dot-com era." Since 1998, I have organized and taught more than fifty judicial education programs for the Federal Judicial Center, circuit courts, and district courts on intellectual property law, including an annual multi-day program for thirty to forty-five federal judges that covers patent law and patent case management. This experience led me to develop and co-author a treatise for federal judges. *See* Peter S. Menell, Lynn H. Pasahow, James Pooley, & Matthew D. Powers, *Patent Case Management Judicial Guide* (Federal Judicial Center 1st ed. 2009, 2d ed. 2012 (adding Steven C. Carlson and Jeffrey G. Homrig)). This experience also has sensitized me to the substantial challenges that federal judges encounter in patent litigation. From June 2012 through June 2013, I served as one of the U.S. Patent & Trademark Office's inaugural Thomas Alva Edison Visiting Profes-

sionals.

This brief draws on this range of experiences to address legal standards governing the clarity of patent claims.

SUMMARY OF ARGUMENT

The innovation sector is awash with patents of uncertain scope, substantially raising the costs of competing, hampering cumulative innovation, and clogging the courts with needlessly complex litigation. The root cause of the problem is that the patent system rewards vague claiming of inventions in some technological fields. By obfuscating the scope of rights and keeping others in the dark about intellectual property rights afforded inventors, patentees can gain greater flexibility in targeting new ventures as well as an element of surprise in later asserting their rights.

The Patent Act insists that applicants "particularly point[] out and distinctly claim" their inventions. 35 U.S.C. § 112(b) (2011). Yet for informational, budgetary, and other institutional reasons, the Patent Office is ill-equipped to solve this problem on its own. Unless applicants have greater incentive to heed Section 112(b)'s requirement, vague claims will persist.

The Federal Circuit's lax legal standard for inval-

idating patent claims for indefiniteness—holding that claims will be struck down only if they are not amenable to construction or are "insolubly ambiguous"—conflicts with Congress's clear command and this Court's venerable jurisprudence emphasizing the manifest justice and fairness of clear patent claims. This case provides the opportunity to reinvigorate the patent system's critical notice function.

ARGUMENT

Just as the Berkeley Center for Law & Technology was taking flight during the "dot-com bubble" era nearly two decades ago, *see* Dot-com bubble, Wikipedia, http://en.wikipedia.org/wiki/Dot-com_bubble, the Bay Area high technology community was burgeoning. Venture capital money was flowing freely to all manner of Internet start-ups. Patents were increasingly seen as a way for venture capitalists to distinguish among investment prospects. Kevin G. Rivette and David Kline's book, *Rembrandts in the Attic: Unlocking the Hidden Value of Patents* (1999) captured the exuberance of the era. As one review noted:

> If you think patents are just about protecting inventions such as the film projector, you're missing the big picture. Now that *ideas* can be protected—for example, Priceline.com's business model —patents can be wielded to intimidate

> competitors, uncover their strategies, capture market segments, and, for many companies, generate millions in licensing revenues. Whether patented ideas will ultimately help or hinder innovation is still under debate (see *Owning the Future*). In *Rembrandts in the Attic*, however, authors Kevin Rivette and David Kline get down to business, offering practical advice for competing in today's intellectual property arena.

Demian McLean, Amazon.com Review (emphasis in original), http://www.amazon.com/Rembrandts-Attic-Unlocking-Hidden-Patents/dp/0875848990.

As Internet litigation began to hit the courts, I reached out to the Federal Judicial Center (FJC) to assist in educating judges about this emerging litigation wave. The FJC responded immediately, offering to send forty federal judges to Berkeley for a three-day conference in June 1998 on "Intellectual Property in the New Technological Age."

It was clear from that initial program that district judges were struggling to deal with patent cases. Beyond the scientific and technological challenges of such litigation, the management of such cases posed novel and distinct problems. This Court's decision in *Markman v. Westview Instruments, Inc.*, 517

U.S. 370 (1996), was still relatively new and district judges were experimenting with different approaches to claim construction. Under the leadership of Judge Ronald Whyte, the Northern District of California had recently promulgated the first set of Patent Local Rules. *See* James Ware & Brian Davy, *The History, Content, Application and Influence of the Northern District of California's Patent Local Rules*, 25 Santa Clara Computer & High Tech. L.J. 965 (2009).

The Patent Office at the time was characterizing its mission as customer-oriented—with patentees (and not the public-at-large) as the customers. *See* U.S. Patent & Trademark Office, *A Patent and Trademark Office Review: Creating a Patent and Trademark System for the 21st Century, Fiscal Year 1997*, at 8 (1997). Through its decision in *State Street Bank & Trust Co. v. Signature Financial Group, Inc.*, 149 F.3d 1368 (Fed. Cir. 1998), the Federal Circuit opened the way for business method patents. The Patent Office was seeing unprecedented levels of software and business method applications. It was difficult to attend any dinner party or social event in the Bay Area without being approached by people seeking advice for filing patents on the next great Internet idea. *Cf.* Robert P. Merges, *As Many As Six Impossible Patents Before Breakfast: Property Rights for Business Concepts and Patent System Reform*, 14 Berkeley Tech. L.J. 577 (1999). A venture was poten-

tially fundable so long as it could attract enough "eyeballs," seemingly regardless of its ability to attract sustainable revenues. Fortunes were being made overnight.

Around that same time, one of my colleagues circulated a draft article suggesting that it was "rational" for the Patent Office to give cursory review to patent applications because it was costly to review patent applications carefully and the overwhelming majority of patents would never be litigated or licensed. *See* Mark A. Lemley, *Rational Ignorance at the Patent Office*, 95 Nw. U. L. Rev. 1495, 1496–97 (2001). I expressed concerns about this analysis, as it appeared to overlook the social costs of a large and growing stock of dubious patents. I feared that we could see a massive wave of litigation. Moreover, even patents that were not licensed or litigated could impose significant social costs as entrepreneurs and established businesses seek to determine their "freedom to operate." Such patents could also generate substantial hidden costs as patent owners threaten business entrepreneurs with litigation. Those on the eve of initial public offerings (IPOs) were particularly vulnerable because they were more focused on avoiding any potential cloud that required disclosure in their filings. Time was of the essence and they did not have the luxury of testing dubious patents in court.

These fears manifested just as the article was published. The dot-com bubble burst in 2000–01, with venture capital investment drying up and many Internet companies failing. Patents were being auctioned off at bankruptcy sales and a new wave of patent entrepreneur emerged: the patent troll. IPO work plummeted as patent litigation exploded. The nation was soon awash in patent litigation, with Eastern Texas leading the way. This Court has seen manifestations of the patent litigation wave through a variety of cases over the past decade—*eBay Inc. v. MercExchange, L.L.C.*, 547 U.S. 388 (2006); *Microsoft Corp. v. AT&T Corp.*, 550 U.S. 437 (2007); *KSR International Co. v. Teleflex Inc.*, 550 U.S. 398 (2007); *Bilski v. Kappos*, 130 S. Ct. 3218 (2010); *Microsoft Corp. v. i4i Ltd. Partnership*, 131 S. Ct. 2238 (2011). The National Academies of Sciences and the FTC undertook extensive studies of these issues. *See* Nat'l Research Council, Nat'l Acads. of Sci., *A Patent System for the 21st Century* (Stephen A. Merrill, Richard C. Levin & Mark B. Myers eds., 2004); Fed. Trade Comm'n, *To Promote Innovation: The Proper Balance of Competition and Patent Law and Policy* (Oct. 2003). And Congress ultimately amended the Patent Act with these concerns in mind. *See* Leahy-Smith America Invents Act of 2011, Pub. L. No. 112-29, 125 Stat. 284 (2011). The Administration and Congress continue to grapple with the fallout. *See, e.g.*, Exec. Office of the President, *Patent Assertion and U.S.*

Innovation (2013); Press Release, White House, *FACT SHEET: White House Task Force on High-Tech Patent Issues*, (Jun. 4, 2013), available at http://www.whitehouse.gov/the-press-office/2013/06/04/fact-sheet-white-house-task-force-high-tech-patent-issues; Stopping the Offensive Abuse of Patents Act (STOP Act), H.R. 2766, 113th Cong. (2013); Patent Litigation and Innovation Act of 2013, H.R. 2639, 113th Cong. (2013).

Throughout this period I continued to organize an annual FJC program on "Intellectual Property in the New Technological Age" as well as regional and circuit panels on salient IP issues. It became increasingly clear that the scope of patent claims was a particular problem in patent litigation. Judges struggled to determine the boundaries of patent claims for several reasons: (1) it was difficult for them to step into the shoes of "persons of ordinary skill in the art" as of the effective patent filing date, (2) the Federal Circuit's jurisprudence was in flux during much of this period, *see* Peter S. Menell, Matthew D. Powers & Steven C. Carlson, *Patent Claim Construction: A Modern Synthesis and Structured Framework*, 25 Berkeley Tech. L.J. 711, 765 (2010), (3) the de novo standard of appellate review discouraged judges from engaging in the type of evidentiary processes that could help them in determining patent scope, *see* J. Jonas Anderson & Peter S. Menell, *Informal Defer-*

ence: An Historical, Empirical, and Normative Analysis of Patent Claim Construction, 108 Nw. U. L. Rev. 1 (2014); and, perhaps most importantly, (4) the patent claims were often vague.

It was increasingly apparent that patentees in the information technology fields could benefit from obfuscating the scope of rights and keeping others in the dark about their intellectual property, thereby having greater flexibility in targeting new ventures and gaining an element of surprise when later asserting their rights. Patent prosecutors well understood these strategies. See, e.g., Jeffrey G. Sheldon, *How to Write a Patent Application* § 6.5.19, at 6–114 (2005) (including a section entitled "Include Ambiguous Claims," which offers numerous "strategies" for "intentionally writ[ing] ambiguous claims"); Robert D. Fish, *Strategic Patenting* 7–35 (2007) (advising drafters to "[a]void . . . like the plague" claim language that clearly identifies the "'gist of the invention'" or the "'factor'" that makes it "'unique'"); David Pressman, *Patent it Yourself* 204 (16th ed. 2012); George F. Wheeler, *Creative Claim Drafting: Claim Drafting Strategies, Specification Preparation, and Prosecution Tactics*, 3 J. Marshall Rev. Intell. Prop. L. 34, 40–45 (2003) (advising to draft broad claims, minimally, and without disclaimers); *see also* Michael Risch, *The Failure of Public Notice in Patent Prosecution*, 21 Harv. J.L. & Tech. 179, 188 (2007)

("Patent applicants have an incentive to allow claims to remain vague so that they can mold the claims to fit the future product of a currently unknown, potential infringer or to avoid invalidation if previously undiscovered prior art comes to light"); Stephen M. McJohn, *Patents: Hiding from History*, 24 Santa Clara Computer & High Tech L.J. 961, 971 (2008) (noting that "[E]xperts in claim drafting offer the following advice to inventors and patent drafters: Do not define the terms used in your claims; do not identify the category of invention in the preamble to the claims; do not identify features of the invention as 'important' . . . " and "[s]uch claim drafting has been described as a trend toward 'intentional obscurity.'" (footnote omitted)); R. Polk Wagner, *Understanding Patent-Quality Mechanisms*, 157 U. Pa. L Rev. 2135, 2149 (2009) ("[A] patentee will almost certainly seek substantial vagueness, thus gaining flexibility to effectively alter the scope and description of the patent according to changing circumstances").

It was around this time that I began working with Professor Michael Meurer on the idea that some forms of property suffer from what we call "notice externalities" – whereby the incentives of those claiming property-type interests can diverge from the social interest. *See* Peter S. Menell & Michael J. Meurer, *Notice Failure and Notice Externalities*, 5 J. Legal Analysis 1 (2013). Our research highlighted

how the patent system rewards vague patent drafting for at least some areas of technology as well as mechanisms for better harmonizing private and social incentives. We presented our research at Federal Trade Commission hearings and worked with their staff in shaping aspects of their 2011 report. *See* Fed. Trade Comm'n, *The Evolving IP Marketplace: Aligning Patent Notice and Remedies with Competition* (2011).

As I came to better understand the conceptual drivers of notice problems, I reached out to Patent Office officials and district judges with the hope of testing out these insights. In Fall 2010, BCLT had commitments from the PTO and distinguished patent jurists to convene the first summit between these two vital patent institutions. On June 6, 2011, PTO Director David Kappos along with top Patent Office staff met with about a dozen experienced patent district judges from around the nation at the University of California at Berkeley School of Law to discuss the interplay between Patent Office processes (examination and reexamination) and the district court activities. After some background presentations on patent claim construction in the district courts and the Patent Office's Section 112 examination guidelines, the group of about twenty-four participants shared their perceptions of the patent system.

We sat around a long table with judges on one side and Patent Office officials on the other. Everyone in the room was stunned by how differently the two sides of the table perceived the importance of patent claim scope in the overall system. The district judges saw scope as the central issue in most patent litigations. By contrast, the Patent Office officials largely saw the patent system through the lens of novelty and non-obviousness determinations, with questions of patent scope playing a relatively modest role in their perception of their responsibilities.

Using an academic metaphor, the Patent Office's focus seemed analogous to a dissertation committee's focus on whether a Ph.D. candidate meets the university's standard for making a sufficient contribution to a field of research as opposed to the extent of the contribution, which comes more centrally into play in the candidate's job prospects. Both issues are important—and the significance of the candidate's contribution is likely to be especially important for the candidate's career trajectory—but the committee's charge is merely to ensure that the dissertation passes muster. Similarly, both validity and scope are vitally important to the patent system's downstream constituencies—competitors, follow-on and independent inventors, and courts having to resolve disputes. It is essential that the Patent Office focus on both patent validity and scope, yet the latter function

has long been neglected.

At one level, the difference in perspective between the Patent Office and district court judges reflects the fact that the Patent Office does not see accused devices or confront infringement questions. Furthermore, the Patent Office receives hundreds of thousands of applications per year and examiners face substantial time and cost pressures in conducting their work. *See* Lemley, *Rational Ignorance*, *supra*, at 1496. Nonetheless, lax attention to the scope of patents at the front end of the patent system creates the notice failure and externalities that are very costly to competitors, future entrepreneurs, and district courts. What may be rational from the Patent Office's subsystem perspective is *irrational* when viewed from the standpoint of the society at large.

David Kappos invited me to serve as one of the PTO's inaugural Edison Scholars based on my efforts to call attention to the patent system's failure to devote greater resources to ensuring that patents have clearer boundaries from the outset of the patent life cycle. During my year as an Edison Scholar, I advised the Patent Office on strategies for promoting patent claim clarity. *See* Request for Comments on Preparation of Patent Applications, 78 Fed. Reg. 2960 (Jan. 15, 2013); Peter S. Menell, *It's Time to Make Vague Software Patents More Clear*, Wired (Feb. 7, 2013, 4:10 PM), http://www.wired.com/opinio

n/2013/02/its-time-to-make-vague-software-patents-more-clear/; Peter S. Menell, *Promoting Patent Claim Clarity* (Nov. 1, 2012), http://papers.ssrn.com/sol3/papers.cfm?abstract_id=2171287; *see also* U.S. Patent & Trademark Office, U.C. Berkeley Software Partnership Meeting (Oct. 17, 2013) (focusing on the use of glossaries in patent applications), *available at* http://www.uspto.gov/patents/init_events/sw_partnership_20131017_ucberkely.jsp.

Although the Patent Office has some claim clarity initiatives on its agenda, these efforts are modest and voluntary. The lack of effective legal standards requiring applicants to delineate claims stands in the way of substantial progress. The Federal Circuit's "insolubly ambiguous" standard perpetuates norms within the prosecution community of seeking broad and vague patent claims. Patentees will generally ensure that some claims are reasonably definite. But there is relatively no harm and minimal cost to pushing those boundaries in the hope that they will get some potential additional assertion benefit. It is difficult to see why patent applicants would take this issue seriously without an appreciable risk that their patent claim could be held invalid.

As Part I of this brief explains, the importance of delineating patent claim boundaries has long been seen by the Congress and this Court as a vital tenet of our patent system. Without readily decipherable

patent boundaries, patent protection risks undermining the innovation ecosystem. The Federal Circuit's "insolubly ambiguous" standard is of relatively recent vintage and has yet to be tested in this Court. As Part II explains, that standard misconstrues the text of Section 112(b) and is out of step with this Court's teachings. This case affords the Court an important opportunity to reinvigorate the patent system's notice function and lay a foundation for improving the efficacy of patents over their entire life cycle.

I. THE HISTORICAL DEVELOPMENT OF STANDARDS FOR PATENT CLAIM CLARITY

The claim indefiniteness doctrine is intimately bound up with the historical development of patent claiming. This Part traces the emergence of patent claims as well as this Court's articulation of the patent notice function.

The formal process of construing patent claims is of relatively recent vintage and reflects the confluence of four principal factors: (1) the emergence of patent claiming in the early nineteenth century, (2) the shift from central to peripheral claiming in the mid- to late nineteenth century, (3) the shift in infringement jurisprudence toward a focus on claim boundaries beginning in the late nineteenth century, and (4) the development of claim definiteness juris-

prudence in the modern era, including *United Carbon's* "zone of uncertainty" standard, and the Federal Circuit's "insolubly ambiguous" standard.

A. 1790–1836: The "Invention" and Emergence of Patent Claims.

The development of the claim definiteness requirement logically begins with the emergence of patent claiming. "[N]othing in the nature of a claim had appeared either in British patent practice or in that of the American states" prior to 1790. *See* Karl B. Lutz, *Evolution of the Claims of U.S. Patents*, 20 J. Pat. Off. Soc'y 134, 134 (1938). At its inception in 1790, the U.S. patent system required:

> a specification in writing, containing a description, accompanied with drafts or models, and explanations and models (if the nature of the invention or discovery will admit of a model) of the thing or things, by him or them invented or discovered, and described as aforesaid, in the said patents.

See Patent Act of 1790, ch. 7 § 2, 1 Stat. 109, 110.

As there was no requirement that the inventor specifically *claim* the invention, most early patents did not contain formal claims. *See* Lutz, *supra*, at 134–35; William Redin Woodward, *Definiteness and*

Particularity in Patent Claims, 46 Mich. L. Rev. 755, 758 (1948). Rather, applicants focused on describing the invention. *See* Patent Act of 1970, ch. 7 § 2, 1 Stat. 109, 110 (requiring applicants to "distinguish the invention or discovery from other things before known"); Patent Act of 1793, ch. 11 § 3, 1 Stat. 318, 321 (requiring applicants to "distinguish the same from all other things before known").

In 1793 Congress replaced the examination process with a registration system, leaving the evaluation of patentability entirely to the courts. Patent Act of 1793, ch. 11, 1 Stat. 318. Despite simply being able to register for a patent, the Act still required the inventor to provide a written description of the invention and manner of use "in such full, clear and exact terms, as to distinguish the same from all other things before known, and to enable any person skilled in the art or science . . . to make, compound, and use the same." *Evans v. Eaton*, 20 U.S. (7 Wheat.) 356, 366–367 (1822).

With rare exceptions, the patents issued in the first two decades of the nineteenth century did not expressly claim inventions and explicit claiming was not yet the general practice. *See* Lutz, *supra*, at 138.

Justice Joseph Story, a leading patent jurist of the first half of the nineteenth century, immediately recognized the problems created by vague and

conclusory descriptions of inventions. *See* Peter S. Menell, *The Mixed Heritage of Federal Intellectual Property Law and Ramifications for Statutory Interpretation, in Intellectual Property and the Common Law*, 70–73, n.65 (Shyamkrishna Balganesh ed.) (2013). Sitting in his first patent case (and the first case to focus on the question of distinguishing a patented invention from the prior art), *see* Lutz, *supra*, at 138, Justice Story noted the "intrinsic difficulty . . . to ascertain . . . the exact boundaries between what was known and used before, and what is new." *Whittemore v. Cutter*, 29 F. Cas. 1123, 1124 (C.C.D. Mass. 1813) (No. 17,601); *see also Odiorne v. Winkley*, 18 F. Cas. 581, 582 (C.C.D. Mass. 1814) (No. 10,432) (noting the "intrinsic difficulty"). He charged the jury that if the plaintiff did not invent "the whole machine" and only contributed "an improvement," the plaintiff's patent must be deemed "too broad" and "utterly void" because it was "clearly a patent for the whole machine." *Whittemore*, 29 F. Cas. at 1123. Justice Story explicated this principle more fully four years later, charging the jury that:

> A patent is grantable only for a new and useful invention; and, unless it be distinctly stated, in what that invention specifically consists, it is impossible to say, whether it ought to be patented or not; and it is equally difficult to know,

> whether the public infringe upon or violate the exclusive right secured by the patent.

Lowell v. Lewis, 15 F. Cas. 1018, 1020 (C.C.D. Mass. 1817) (No. 8,568).

The early judicial focus on patent clarity was directed to the question of patent validity—whether the specification adequately described the invention "in such full, clear and exact terms, as to distinguish the same from all other things before known"—as opposed to patent infringement. *See* Patent Act of 1793, ch. 11, § 3, 1 Stat. 318, 321; Woodward, *supra*, at 760 (explaining that "the courts for a long time did not regard the particular formulations chosen by the inventor to express his claim and distinguish his invention from the prior art as the definitive measure of the scope of the patent"). In 1822, the Supreme Court in *Evans v. Eaton* upheld the trial court's decision invalidating Evans's patent for failure to distinguish his improvement from the prior art:

> We do not say that the party is bound to describe the old machine; but we are of opinion that he ought to describe what his own improvement is, and to limit his patent to such improvement.

Evans, 20 U.S. (7 Wheat.) at 435; *see also Isaacs v. Cooper*, 13 F. Cas. 153, 154 (C.C.D. Pa. 1821) (No.

7,096) (denying relief on the ground that "the nature of the improvement is altogether unintelligible").

In 1828, Dr. Thomas P. Jones, the Superintendent of the Patent Office, published an article entitled "Information to Persons Applying for Patents, or Transacting Other Business at the Patent Office," instructing applicants that:

> No more must be claimed in the patent, than what is new, and is the invention, or discovery, of the patentee.
>
> Many patents have been vacated, in consequence of inattention to this last rule. In the specification it is perfectly proper to describe an entire machine, although most parts of it may have been long known and used, as, otherwise, it may be difficult to make known the improvements; but after doing this, the patentee should distinctly set forth what he claims as new; and this is best done in a separate paragraph, at the end of the specification . . . .

See Thomas P. Jones, *Information to Persons Applying for Patents, or Transacting Other Business at the Patent Office*, 6 Franklin J. & Am. Mechanic's Mag. 332, 334 (1828). By the late 1820s patent drafters began to include formal patent claims at the end of

their applications for the purpose of avoiding invalidation on the ground of defective specification. *See* N.J. Brumbaugh, *History and Purpose of Claims in United States Patent Law*, 14 J. Pat. Off. Soc'y 273, 276–77 (1932); Lutz, *supra*, at 139–40 (observing that patent practitioners had "almost universally" been claiming their inventions in the years leading up to the 1836 Act).

Nonetheless, the lack of an examination system eroded faith in the patent system due to the proliferation of "unrestrained and promiscuous grants of patent privileges." *See* John Ruggles, *Report of the Select Committee Appointed to Take Into Consideration the State and Condition of the Patent Office*, S. Doc. No. 24-338, at 4 (1836). "A considerable portion of all the patents granted are worthless and void, as conflicting with, and infringing upon one another," the country was "flooded with patent monopolies, embarrassing to bona fide patentees, whose rights are thus invaded on all sides," and the "interference and collision of patents and privileges" had produced ruinous vexatious litigation. *Id.* at 4.

B. The 1836 Patent Act.

In response to this crisis, the Patent Act of 1836 reinstituted the examination process in a newly constituted Patent Office and encouraged claiming conventions that grew out of jurisprudence, *see*

Brumbaugh, *supra*, at 276, by requiring applicants to "particularly *specify and point out* the part, improvement, or combination, which he claims as his own invention or discovery." *See* Patent Act of 1836, ch. 357, § 6, 5 Stat. 117, 199 (emphasis added); *see also* Lutz, *supra*, at 143 ("This addition to the statute had no immediate effect on the form or substance of claims because it was understood as merely codifying the existing law which had been developed by the courts.").

As a result of jurisprudence, Patent Office policies, and the 1836 Act, the use of what is now referred to as a "central" claiming format became the norm. This claiming format responded to the invalidation of overbroad claiming identified in such cases as *Whittemore* and *Evans* by using "reference characters" — alpha-numeric labels for patent drawings — to specify particular structural components illustrating their improvement. *See* Ridsdale Ellis, *Patent Claims* §§ 3–5 (1949). The Patent Office's Rules of Practice as late as 1869 recommended use of reference characters in patent claims. *See id.* § 5.

Aside from the format in which claims were written, claims from this era differed from modern practice in their application and importance at trial. Claims were not used during this era as the basis for assessing patent infringement. The early infringement standard measured the accused device against

the entirety of the patent, sometimes with reference to the patentee's actual device, using a substantial identity test. *See* Woodward, *supra*, at 760; George Ticknor Curtis, *A Treatise on the Law of Patents for Useful Inventions in the United States of America* § 220, at 262. The courts only gradually and episodically came to see the importance of claim boundaries in evaluating patent infringement. *See* Lutz, *supra*, at 760; Woodward, *supra*, at 760–65; *Wyeth v. Stone*, 30 F. Cas. 723, 727–28 (C.C.D. Mass. 1840) (No. 18,108) (Story, J.).

Some applicants, however, used "peripheral" claiming even before the 1836 Act. *See, e.g.*, *Washburn v. Gould*, 29 F. Cas. 312, 313–14 (C.C.D. Mass. 1844) (No. 17,214) (quoting from a patent for "a new and useful improvement in the method of planing, tonguing, grooving, and cutting into mouldings" registered in 1828); R. Carl Moy, *1 Moy's Walker on Patents* § 4:2, at 4–18 to –20 (4th ed. 2006). These claims used linguistic formulations, rather than references to specific improvements, to delineate the metes and bounds of the claimed invention.

C. The 1870 Patent Act.

The Patent Act of 1870 formalized patent claiming by requiring applicants to "particularly point out and distinctly *claim* the part, improvement, or combination which he claims as his invention or discov-

ery," *see* Patent Act of 1870, ch. 230, § 26, 16 Stat. 198, 201 (emphasis added). Of greater importance, the form of patent claims underwent a dramatic shift at about this time from central to peripheral claiming. *See* Anderson & Menell, *supra*, at 13–14.

Several institutions and factors contributed to this transformation in patent claiming. The Patent Office had begun encouraging peripheral claiming well before the Patent Act of 1870, as it sought more detailed and clear articulation of patent claims. In *Ex parte Rubens*, Commissioner Fisher expressed:

> The claim should state all the elements of the combination intended to be patented, and if the parts are the same in name and number as in some prior machine, and the improvement consists in some modification of one or more of those parts, the claim should distinctly state that modification.

See Ex parte Rubens & Co., 1869 Dec. Comm'r Pat. 107, 108. Other decisions from this transformative period upheld claims lacking reference characters, *see Ex parte Continental Windmill Co.*, 1870 Dec. Comm'r Pat. 74, 75, permitted "genus claiming," *see Ex parte Eagle*, 1870 Dec. Comm'r Pat. 137, 137, and signaled receptivity to multiple claims. *See Ex parte Perry & Lay*, 1869 Dec. Comm'r Pat. 1, 1 (stating

that "claims in different forms . . . prevent misconstructions").

The courts also played a critical role in the shift toward peripheral claiming, although the change of judicial course followed rather than led the Patent Office's efforts. During the period when central claiming predominated, courts did not view claim language as a restriction on a patent's scope. *See* Lutz, *supra*, at 147 (explaining that "claims rarely, if ever, received consideration on the question of infringement" prior to 1870). *But cf.* Woodward, *supra*, at 760 (noting that as early as 1831, a few courts "expressed that the claims of a patent might bind the patentee against assertion of a broader scope for the patent on the question of infringement"). Rather, courts used claims as well as the specification to ascertain the patent's underlying inventive principle, and then evaluated whether the defendant's device embodied this principle, either identically or in a substantially equivalent manner. *See, e.g.*, *Odiorne*, 18 F. Cas. at 582 (charging the jury that "[t]he material question, therefore, is not whether the elements of motion, or the same component parts are used, but whether the given effect is produced substantially by the same mode of operation, and the same combination of powers, in both machines"); *Wyeth*, 30 F. Cas. at 728 ((instructing jury that the patentee is not "bound down to any precise form of words"); Curtis,

supra, at 262 (explaining the principle of "substantial identity" in patent infringement cases).

This approach to determining infringement reached its apogee in 1853, when the Supreme Court applied the doctrine of equivalents in *Winans v. Denmead*, 56 U.S. (15 How.) 330 (1853). Writing for a narrow majority, Justice Benjamin Curtis reversed the trial judge, finding that the defendants' rail cars were "substantially the same" "structure," "mode of operation," and "result." *Id.* at 338–41. The court focused not on the wording of the claim, but rather on what it considered to be the substance of the invention: the "new mode of operation." *Id.* at 341. The majority pointedly downplayed the role of claim language in restricting patent scope. *See id.* at 343 (holding that a patent extends beyond the words of the claim to "every form in which his invention may be copied").

Justice Campbell, joined by three other members of the Court, dissented, emphasizing the need for patents to provide clear notice of their boundaries to the public. *See id.* at 347 (Campbell, J., dissenting). "Fulness, clearness, exactness, preciseness, and particularity, in the description of the invention, its principle, and of the matter claimed to be invented, will alone fulfil the demands of Congress or the wants of the country" in promoting competition and innovation. *Id.* In the dissent's view, the "language of

the patent is full, clear, and exact. The claim is particular and specific. Neither the specification nor the claim . . . embrace the workmanship of the defendants." *Id.* at 347–48.

Campbell's view ultimately prevailed. In two decisions in the late 1870s—*Merrill v. Yeomans*, 94 U.S. 568, 573–74 (1876), and *Keystone Bridge Co. v. Phoenix Iron Co.*, 95 U.S. 274, 278 (1877)—the Supreme Court embraced patent law's public notice function by linking the scope of patent protection to the metes and bounds set forth in patent claims. These rulings contributed greatly to the decline of central claiming. *See* Jeffrey A. Lefstin, *The Formal Structure of Patent Law and the Limits of Enablement*, 23 Berkeley Tech. L.J. 1141, 1142–45 (2008) (citing *Merrill* as establishing the foundation for "[a]n ordered and logical system of patent law" based on "an ordered and logical system for defining patent rights. The system of peripheral claiming, in which the claims set forth the boundaries of the patent, served both ends"). In a watershed passage in *Merrill*, the Court explained the critical role of clearly identifiable patent boundaries for technological and economic advance:

> The genius of the inventor, constantly making improvements in existing patents—a process which gives to the patent system its greatest value, —should

> not be restrained by vague and indefinite descriptions of claims in existing patents from the salutary and necessary right of improving on that which has already been invented. It seems to us that nothing can be more just and fair, both to the patentee and to the public, than that the former should understand, and correctly describe, just what he has invented, and for what he claims a patent.

See Merrill, 94 U.S. at 573–74.

The Court continued its strict attitude towards claim language and clarity in *Keystone*. Emphasizing the inventor's duty to "particularly specify and point out the part, improvement or combination which he claims as his own invention or discovery," the Court noted this language was codified to:

> reliev[e] the courts from the duty of ascertaining the exact invention of the patentee from inference and conjecture . . . . When the terms of a claim in a patent are clear and distinct [] *as they always should be* [], the patentee, in a suit brought upon the patent, is bound by it.

Keystone, 95 U.S. at 278 (emphasis added).

These events helped the patent claim emerge as the defining feature of the patent. *See Burns v. Meyer*, 100 U.S. 671, 672 (1879) ("The courts, therefore, should be careful not to enlarge, by construction, the claim which the Patent Office has admitted, and which the patentee has acquiesced in, beyond the fair interpretation of its terms."). In his seminal 1890 treatise, William C. Robinson stated "the office of the Claim [is] to define the limits of that exclusive use which is secured to the inventor by the patent"; "[t]he Claim is thus the life of the patent so far as the rights of the inventor are concerned." *See* 2 William C. Robinson, *The Law of Patents for Useful Inventions* § 504, at 110 (Boston, Little, Brown & Co. 1890). As Robinson explained, "[t]he paramount importance of the Claim, and the necessity for such exactness and completeness in its statements as will precisely define the invention to be protected by the patent, have led to the establishment of numerous rules for framing it . . . ." *See id.* § 507, at 115.

While two early twentieth century decisions appeared to relax the Court's requirements for claim clarity, the Court returned to the standards set forth in *Merrill* and *Keystone* in its last three decisions on patent claim indefiniteness. *Chisum On Patents* § 8.02[3].

In *Carnegie Steel Co. v. Cambria Iron Co.*, the Court noted that "[t]he claim of a patent must always be explained by and read in connection with the specification . . . " and further that claim language "is not addressed to lawyers, or even to the public generally," but to persons with skill in the art. 185 U.S. 403, 432, 437 (1902). Twenty years later, in *Eibel Process Co. v. Minnesota & Ontario Paper Co.*, the Court held a claim that used the terms "substantial" and "high" valid and not too indefinite because "[e]xpressions quite as indefinite as 'high' and 'substantial' in describing an invention or discovery in patent . . . claims, have been recognized by this [C]ourt as sufficient." 261 U.S. 45, 66 (1923).

In the 1930s and 1940s, the Court returned to a strict definiteness requirement, invalidating claims on the basis of indefiniteness in a trio of cases including *United Carbon Co. v. Binney & Smith Co.*, the last Supreme Court case to address claim indefiniteness. 317 U.S. 228 (1942).

In *Permutit Co. v. Graver Corp.*, 284 U.S. 52, 60 (1931), the Court discussed the patentee's duty "to inform the public during the life of the patent of the limits of the monopoly asserted, so that it may be known which features may be safely used or manufactured without a license and which may not." Similarly, in *General Electric Co. v. Wabash Appliance*

Corp., 304 U.S. 364, 369 (1938), the Court discussed the notice function of patent claims:

> The limits of a patent must be known for the protection of the patentee, the encouragement of the inventive genius of others and the assurance that the subject of the patent will be dedicated ultimately to the public. The statute seeks to guard against unreasonable advantages to the patentee and disadvantages to others arising from uncertainty as to their rights.

In *United Carbon*, the Court held "[a]n invention must be capable of accurate definition, and it must be accurately defined, to be patentable." 317 U.S. at 237 (1942). The Court stressed that "[t]o sustain claims so indefinite as not to give the notice required by the statute would be in direct contravention of the public interest which Congress therein recognized and sought to protect." *Id.* at 233. To avoid "[a] zone of uncertainty which enterprise and experimentation may enter only at the risk of infringement claims" the Court defined the following standard:

> The statutory requirement of particularity and distinctness in claims is met only when they clearly distinguish what is claimed from what went before in the

> art and clearly circumscribe what is foreclosed from future enterprise.

Id. at 236.

D. The 1952 Patent Act and the Origins of the Federal Circuit's "Insolubly Ambiguous" Standard.

The 1952 Patent Act carried over language from the 1870 Patent Act, and requires that "the specification shall conclude with one or more claims particularly pointing out and distinctly claiming the subject matter which the applicant regards as his invention. 35 U.S.C. § 112(b).

The Federal Circuit's "insolubly ambiguous" standard made its debut much later in *Exxon Research & Engineering Co. v. United States*, 265 F.3d 1371, 1375 (Fed. Cir. 2001) ("If a claim is insolubly ambiguous, and no narrowing construction can properly be adopted, we have held the claim indefinite."). This approach find claims sufficiently definite as long as they are "amenable to construction," even if "reasonable persons will disagree" as to the scope of the claim, and gives the allowance that "some experimentation may be necessary to determine the scope of the claims." *Id.* at 1375, 1379.

While the Federal Circuit has provided various policy justifications for the "insolubly ambiguous"

standard, *see, e.g.*, *Exxon*, 265 F.3d at 1375 ("By finding claims indefinite only if reasonable efforts at claim construction prove futile, we accord respect to the statutory presumption of patent validity . . . and we protect the inventive contribution of patentees, even when the drafting of their patents has been less than ideal"; "Under a broad concept of indefiniteness, all but the clearest claim construction issues could be regarded as giving rise to invalidating indefiniteness in the claims at issue"), the jurisprudential basis for the standard is unclear. Prior to *Exxon*, the Federal Circuit required that one "skilled in the art would understand what is claimed when the claim is read in light of the specification." *Morton Int'l Inc. v. Cardinal Chem. Co.*, 5 F.3d 1464, 1470 (Fed. Cir. 1993) (citing *Orthokinetics, Inc. v. Safety Travel Chairs, Inc.*, 806 F.2d 1565, 1576 (Fed. Cir. 1986)); *see also Seattle Box Co., Inc. v. Indus. Crating & Packing, Inc.*, 731 F.2d 818, 826 (Fed. Cir. 1984) (using this formulation first). In *Exxon*, the Federal Circuit narrowed this standard based on the proposition that "[i]f the meaning of the claim is discernible, even though the task may be formidable and the conclusion may be one over which reasonable persons will disagree, we have held the claim sufficiently clear to avoid invalidity on indefiniteness grounds." *Exxon*, 265 F.3d at 1375 (citing *Modine Mfg. Co. v. U.S. Int'l Trade Comm'n*, 75 F.3d 1545, 1557 (Fed. Cir. 1996);

Athletic Alts., Inc. v. Prince Mfg., Inc., 73 F.3d 1573, 1581 (Fed. Cir. 1996)).

Modine held that "technical terms are not *per se* indefinite when expressed in qualitative terms without numerical limits," and "[m]athematical precision should not be imposed for its own sake; a patentee has the right to claim the invention in terms that would be understood by persons of skill in the field of the invention." 75 F.3d at 1557. While *Modine* states that "[w]hen claims are amenable to more than one construction, they should when reasonably possible be interpreted so as to preserve their validity," the cases cited for that proposition do not discuss indefiniteness. *See id.* (citing *Whittaker Corp. by Technibilt Div. v. UNR Indus., Inc.*, 911 F.2d 709, 710 (Fed. Cir. 1990) (stating the only question before [the court] is whether the district court's determination on summary judgment that the claims of the [patent] do not differ materially from the claims [] surrendered to obtain the allowance of the original [] patent reflects a correct construction of the claims) (internal quotations omitted); *ACS Hosp. Sys., Inc. v. Montefiore Hosp.*, 732 F.2d 1572 (Fed. Cir. 1984) (reversing the district court's determination that the patent was obvious under 35 U.S.C. § 103 (2011) and affirming a finding of non-infringement)).

Similarly, *Athletic Alternatives* did not involve indefiniteness. 73 F.3d at 1573 (affirming the district

court's determination that Claim 1 of the patent does not literally read on the defendant's product and finding no plausible argument of infringement under the doctrine of equivalents). In construing the patent claims, the court looked to Section 112 for guidance on how to "decide which of the two sense of 'varies between' to employ." *Id.* at 1581. The court concluded:

> Where there is an equal choice between a broader and a narrower meaning of a claim, and there is an enabling disclosure that indicates that the applicant is at least entitled to a claim having the narrower meaning, we consider the notice function of the claim to be best served by adopting the narrower meaning.

Id.

II. THE APPROPRIATE STANDARD FOR PATENT CLAIM INDEFINITENESS.

Section 112 of the 1952 Patent Act commands that "the specification shall conclude with one or more claims particularly pointing out and distinctly claiming the subject matter which the applicant regards as his invention." 35 U.S.C. § 112. This provision makes clear that the inventor must write precise, unambiguous claims.

The Federal Circuit's "insolubly ambiguous" standard falls well short. Under this standard, a claim could pass muster even if two reasonably skilled artisans disagree as to its meaning so long as "reasonable efforts at claim construction" don't "prove futile." *See Exton*, 265 F.3d at 1375. Such a standard conflicts with the clear mandate of the statute to claim "distinctly." "Distinct" means clear and definite, *see* Brief for Petitioner at 24–25, Nautilus, Inc. v. Biosig Instruments, Inc. (No. 13-369) (2014), the opposite of reasonable disagreement. The Federal Circuit may well believe that it would be better to cut patentees greater slack, but that is not within the range of permissible statutory interpretation. Moreover, patentees can obtain substantial slack by filing multiple claims. They also receive slack under the doctrine of equivalents. But the only claims that will be allowed under the statute are those that are clear and definite.

The Federal Circuit's "insolubly ambiguous" standard fails to motivate patentees to provide the public adequate notice of their claim boundaries. Consequently, it conflicts with this Court's precedents. *See Wabash*, 304 U.S. at 369; *Permutit*, 284 U.S. at 60 (The patentee must "inform the public during the life of the patent of the limits of the monopoly asserted, so that it may be known which features may be safely used or manufactured without a

license . . ."). By upholding claims so long as they "can be given any reasonable meaning," *Datamize, LLC v. Plumtree Software, Inc.*, 417 F.3d 1342, 1347 (Fed. Cir. 2005), the "insolubly ambiguous" standard creates "[a] zone of uncertainty which enterprise and experimentation may enter only at the risk of infringement claims." *United Carbon*, 317 U.S. at 236. Thus, "it is not until three court of appeals judges randomly selected for that purpose pick the 'right' interpretation that the public, not to mention the patentee and its competitors, know what the patent actually claims." *Enzo Biochem, Inc. v. Applera Corp.*, 605 F.3d 1347, 1348 (Fed. Cir. 2010) (Plager, J., dissenting). This approach conflicts with the language and spirit of this Court's precedent. *See Merrill*, 94 U.S. at 573 ("The genius of the inventor . . . should not be restrained by vague and indefinite descriptions of claims in existing patents . . . ."); *United Carbon*, 317 U.S. at 237 ("An invention must be capable of accurate definition, and it must be accurately defined, to be patentable.").

A claim should be held invalid under Section 112(b) if reasonable persons having ordinary skill in the art[2] could come to different conclusions regarding

---

[2] Professor John Golden has astutely suggested that it might make more sense to construe claims through the lens of claim drafters. *See* John M. Golden, *Construing Patent Claims According to Their "Interpretive Community" A Call for an At-*

the material scope of the claim. The statute places the burden to present clear claims on the applicant. *See* 35 U.S.C. § 112(b) (stating that "[t]he specification *shall* conclude with one or more claims particularly pointing out and distinctly claiming the subject matter" (emphasis added)).

Such a standard would complement efforts by the Patent Office to improve the quality of patent examination and claim clarity. Applicants would have stronger motivation to articulate claim boundaries clearly and provide glossaries, which would ease examiners' efforts to assess novelty, nonobviousness, enablement, and adequacy of written description. Furthermore, patent examiners would have a stronger basis for requesting clarification of ambiguous terms — such as terms of degree. *Cf.* Peter S. Menell, et al., *Patent Case Management Judicial Guide* §5.2.3.1.5.2.1 (2d ed. 2012), *available at* http://papers.ssrn.com/sol3/papers.cfm?abstract_id=2114398. Additional benefits would flow downstream because clearer claims would assist potential competitors, inventors, opinion counsel, and courts in evaluating patent scope, potential liability, and freedom to operate. Clearer claims promise to reduce the need to litigate as well as the number and complexity

---

torney-Plus-Artisan Perspective, 21 Harv. J.L. & Tech 322, 380 (2008). His insight would apply equally to the appropriate audience for assessing claim indefiniteness.

of claim construction disputes that arise.

The Federal Circuit's concern with protecting "the inventive contribution of patentees," *Exxon*, 265 F.3d at 1375, through such a lax indefiniteness standard is misplaced. Under the statutory standard, patentees will receive protection for the subject matter that they "particularly point[] out and distinctly claim[]" as well as infringement based on the doctrine of equivalents. *See Graver Tank & Mfg. Co. v. Linde Air Prods. Co.*, 339 U.S. 605 (1950). Patentees will be covered for after-arising technologies even for amended claims. *See Festo Corp. v. Shoketsu Kinzoku Kogyo Kabushiki Co.*, 535 U.S. 722 (2002).

The Court should not be concerned that patents issued during the period since the Federal Circuit articulated its "insolubly ambiguous" standard may have relied on this lax standard for several reasons. First, the statute's clear language commands that patentees "particularly point[] out and distinctly claim[]" their invention. Second, the Supreme Court's precedents support a higher standard. Third, patentees have always had and taken the opportunity to hedge their bets through including a range of claims of varying breadth and clarity. It is appropriate that vague claims be invalidated.

CONCLUSION

While capable of producing great societal benefits,

the patent system can also hamper technological progress and free competition when competitors, inventors, the public-at-large, and the judicial system cannot reasonably ascertain patent claim boundaries. As this Court declared more than a century ago, "nothing can be more just and fair, both to the patentee and to the public, than that the former should understand, and correctly describe, just what he has invented, and for what he claims a patent." *Merrill*, 94 U.S. at 573–74. Reasonable public notice of patent boundaries is even more vital in today's high technology economy.

The Patent Act imposes upon the patentee the responsibility to "particularly point[] out and distinctly claim[]" their invention. 35 U.S.C. § 112(b). The Federal Circuit's application of this language to reject only those claims that are not amenable to construction or "insolubly ambiguous" contributes to growing confusion about where patents legitimately preempt competition and where competitors may freely operate. Implementing the letter of Section 112(b) would better ensure that the patent system affords proper notice at reasonable overall cost.

For the reasons stated above, the Court should tighten the indefiniteness standard to ensure that a claim for which reasonable ordinary skilled artisans could come to different conclusions regarding its material scope is invalidated and remand this case for

reconsideration in light of this statutorily appropriate indefiniteness standard.

Respectfully submitted,

PETER S. MENELL
Counsel of Record
Koret Professor of Law
and Director
BERKELEY CENTER FOR LAW &
TECHNOLOGY
UC BERKELEY SCHOOL OF LAW
Boalt Hall
Berkeley, CA 94720
(510) 642-5489
pmenell@law.berkeley.edu

AMICUS CURIAE BRIEF

RECORD AND BRIEFS

No. 13-369

Supreme Court, U.S.
FILED
MAR - 3 2014
OFFICE OF THE CLERK

In The Supreme Court of the United States

NAUTILUS, INC.,

Petitioner,

v.

BIOSIG INSTRUMENTS, INC.,

Respondent.

ON WRIT OF CERTIORARI TO THE UNITED STATES COURT OF APPEALS FOR THE FEDERAL CIRCUIT

BRIEF OF MICROSOFT CORPORATION AS *AMICUS CURIAE* IN SUPPORT OF PETITIONER

T. Andrew Culbert
Isabella Fu
MICROSOFT CORPORATION
One Microsoft Way
Redmond, WA 98052

I. Neel Chatterjee
Monte Cooper
Misasha Suzuki
ORRICK, HERRINGTON & SUTCLIFFE LLP
1000 Marsh Road
Menlo Park, CA 94025

E. Joshua Rosenkranz
Counsel of Record
Christopher J. Cariello
ORRICK, HERRINGTON & SUTCLIFFE LLP
51 West 52nd Street
New York, NY 10019
(212) 506-5000
jrosenkranz@orrick.com

Eric A. Shumsky
ORRICK, HERRINGTON & SUTCLIFFE LLP
Columbia Center
1152 15th Street, N.W.
Washington, D.C. 20005

Counsel for Amicus Curiae

Library of Congress
Law Library

TABLE OF CONTENTS

Page

TABLE OF AUTHORITIES ii

INTEREST OF *AMICUS CURIAE* 1

INTRODUCTION AND SUMMARY OF ARGUMENT 2

ARGUMENT 6

I. THE STANDARD FOR DEFINITENESS SHOULD ACCOUNT FOR THE FACT THAT PATENT APPLICANTS ARE THE ONES BEST ABLE TO AVOID THE COSTS OF NOTICE FAILURE. 6

A. The Responsibility For Avoiding The Costs Of Notice Failure Should Rest With The Party Best Positioned to Do So. 7

B. Patent Applicants Have Every Opportunity To Draft And Obtain Clear Patents. 12

II. A PATENT SYSTEM THAT FAILS TO REQUIRE SUFFICIENT CLARITY WILL GIVE RISE TO RAMPANT NOTICE FAILURE, THEREBY IMPOSING HUGE COSTS ON INNOCENT ACTORS. 19

A. Patent Applicants Have Strong Incentives To Avoid Providing Clear Notice. 20

B. Notice Failure Distorts the Patent System, Imposes Huge Costs, and Hinders Innovation. 25

CONCLUSION 36

TABLE OF AUTHORITIES

Page(s)

Cases

Athletic Alternatives, Inc. v. Prince Mfg., Inc.,
73 F.3d 1573 (Fed. Cir. 1996) 18

Bonito Boats, Inc. v. Thunder Craft Boats, Inc.,
489 U.S. 141 (1989) 7

Datamize, LLC v. Plumtree Software, Inc.,
417 F.3d 1342 (Fed. Cir. 2005) 24

eBay Inc. v. MercExchange, L.L.C.,
547 U.S. 388 (2006) 29

Enzo Biochem, Inc. v. Applera Corp.,
605 F.3d 1347 (Fed. Cir. 2010) 21

Festo Corp. v. Shoketsu Kinzoku Kogyo Kabushiki Co.,
535 U.S. 722 (2002) 2, 6, 7

Halliburton Energy Servs., Inc. v. M-I LLC,
514 F.3d 1244 (Fed. Cir. 2008) 3, 10, 16

Lemelson v. TRW, Inc.,
760 F.2d 1254 (Fed. Cir. 1985) 15

Permutit Co. v. Graver Corp.,
284 U.S. 52 (1931) 3

Retractable Techs., Inc. v. Becton Dickinson and Co.,
659 F.3d 1369 (Fed. Cir. 2011) 25

Page(s)

SuperGuideCorp. v. DirecTV Enters., Inc.,
358 F.3d 870 (Fed. Cir. 2004) 18

In re Tanaka,
640 F.3d 1246 (Fed. Cir. 2011) 19

Transco Prods., Inc. v. Performance Contracting, Inc.,
38 F.3d 551 (Fed. Cir. 1994) 18

United Carbon Co. v. Binney & Smith Co.,
317 U.S. 228 (1942) 34

United States v. Seckinger,
397 U.S. 203 (1970) 9

Statutes and Rules

35 U.S.C. § 112 ..... 5, 13, 17, 24

35 U.S.C. § 112(b) 3, 5

35 U.S.C. § 112(d) 14

35 U.S.C. § 120 18

35 U.S.C. § 251 19

35 U.S.C. § 257 19

35 U.S.C. § 282 15

35 U.S.C. §§ 321-329 19

Page(s)

America Invents Act, Pub. L. No. 112-29, 125 Stat. 284 (2011) 19

Regulatory Materials

37 C.F.R. § 1.75(c) 15

37 C.F.R. §§ 1.104-1.106 16

37 C.F.R. § 1.114 17

37 C.F.R. §§ 1.141(a) 14

37 C.F.R. § 1.142 14

37 C.F.R. § 42.221 19

Supplementary Examination Guidelines, 76 Fed. Reg. 7162 (Feb. 9, 2011) 13, 17

Local Rules

N.D. Ill. Loc. Pat. R. 4.1(b) 33

N.D.N.Y. Loc. R. Pat. R. 4.4(b) 33

W.D. Wash. Loc. Pat. R. 132(c) 33

Other Authorities

American Intellectual Property Law Assoc., *Report of the Economic Survey* (2013) 32

Page(s)

J. Jonas Anderson & Peter S. Menell, *Informal Deference: An Historical, Empirical, and Normative Analysis of Patent Claim Construction*, 108 Nw. U.L. Rev. __ (forthcoming 2013), http://papers.ssrn.com/so13/papers.cfm?abstract_id=2150360 25

Ian Ayres & Robert Gertner, *Filling Gaps in Incomplete Contracts: An Economic Theory of Default Rules*, 99 Yale L.J. 87 (1989) 9

James Bessen & Michael Meurer, *The Direct Costs from NPE Disputes*, 99 Cornell L. Rev. __ (forthcoming 2014) 29

James Bessen & Michael Meurer, *Patent Failure: How Judges, Bureaucrats and Lawyers Put Innovators at Risk* (2008) .....*passim*

Roger D. Blair & Thomas F. Cottler, *Strict Liability and Its Alternatives In Patent Law*, 17 Berkley Tech. L.J. 799 (2002)..... 26

Dan L. Burk & Mark A. Lemley, *The Patent Crisis and How the Courts Can Solve It* (2009) 22

Guido Calabresi, *The Cost of Accidents: A Legal and Economic Analysis* (1970)..... 7

Jules L. Coleman, *The Structure of Tort Law*, 97 Yale L.J. 1233 (1988) 8

Page(s)

Dennis Crouch, *Claims in Issued Patents*, Patently-O Blog (Feb. 22, 2013) http://patentlyo.com/patent/2013/02/claims-in-issued-patents.html 14

Irah H. Donner, *Patent Prosecution: Law, Practice and Procedure* (8th ed. 2013) .....*passim*

Frank H. Easterbrook, *Intellectual Property is Still Property*, 13 Harv. J.L. & Pub. Pol'y 108 (1990)..... 7

Robert C. Faber, *Faber on Mechanics of Patent Claim Drafting* (6th ed. 2013) .....*passim*

Federal Circuit Bar Association, *Federal Circuit Bar Association Model Patent Jury Instructions* (2012)..... 14

Federal Trade Commission, *The Evolving IP Marketplace: Aligning Patent Notice and Remedies with Competition* (2011).....*passim*

Robin Feldman, *Intellectual Property Wrongs*, 18 Stan. J.L. Bus. & Fin. 250 (2013)..... 27

Richard S. Gruner, *How High is Too High?: Reflections on the Sources and Meaning of Claim Construction Reversal Rates at the Federal Circuit*, 43 Loy. L.A. L. Rev. 981 (2010) 25

Herbert Hovenkamp, *Competition for Innovation*, 2012 Colum. Bus. L. Rev. 799 (2012)..... 11

Page(s)

Herbert Hovenkamp, *Notice and Patent Remedies*, 88 Tex. L. Rev. 221 (2011) 8

Herbert Hovenkamp, *Patents, Property, and Competition Policy*, 34 J. Corp. L. 1743 (2009) 30, 31

Jay P. Kesan & Marc Banik, *Patents as Incomplete Contracts: Aligning Incentives for R&D Investment with Incentives to Disclose Prior Art*, 2 Wash. U. J.L. & Pol'y 23 (2000) 10

Ian A. Lampl, *Establishing Rules for Resolving* Markman *Failures*, 72 U. Chi. L. Rev. 1025 (2005) 10, 23

William M. Landes & Richard A. Posner, *The Economic Structure of Intellectual Property Law* (2003)..... 28

Mark A. Lemley, *Rational Ignorance at the Patent Office*, 95 Nw. U. L. Rev. 1495 (2001)..... 23

Mark A. Lemley, *Ten Things to Do About Patent Holdup of Standards*, 48 B.C. L. Rev. 149 (2007) 30, 31

Mark A. Lemley & Kimberly A. Moore, *Ending Abuse of Patent Continuations*, 84 B.U. L. Rev. 63 (2004)..... 18

Page(s)

Mark Lemley & Bhaven Sampat, *Examining Patent Examination*, 2010 Stan. Tech. L. Rev. 2, http://stlr.stanford.edu/pdf/lemley-sampat-examining-patent.pdf. 16, 17, 18

Jonas McDavit, *Putting the Cart Before the Horse: Obstacles to Using Issue Preclusion in a Post*-Markman *World*, 34 AIPLA Q.J. 45 (2006).....33

Stephen M. McJohn, *Patents: Hiding From History*, 24 Santa Clara Computer & High Tech L.J. 961 (2008)..... 21

Peter S. Menell & Michael Meurer, *Notice Failure and Notice Externalities*, J. Legal Analysis, Spring 2013.....31

Robert P. Merges, *The Trouble with Trolls: Innovation, Rent-Seeking, and Patent Law Reform*, 24 Berkeley Tec. L.J. 1583 (2009) 30

Thomas W. Merrill & Henry E. Smith, *The Oxford Introduction to U.S. Law: Property* (2010)..... 9

Kelly Casey Mullally, *Legal (Un)certainty, Legal Process, and Patent Law*, 43 Loy. L.A. L. Rev. 1109 (2010) 14

Joyce Palomar, *Patton and Palomar on Land Titles* (3d ed. 2003).....8

Page(s)

Lee Petherbridge, *On the Development of Patent Law*, 42 Loy. L.A. L. Rev. 893 (2010) 23, 24

Restatement (Second) of Contracts § 206 (1981) 9

Michael Risch, *The Failure of Public Notice in Patent Prosecution*, 21 Harv. J.L. & Tech. 179 (2007) 5, 20

F.M. Scherer, *New Perspectives on Economic Growth and Technological Innovation* (1999)..... 26

Joseph W. Singer, *Property Law: Rules, Policies, and Practices* (4th ed. 2006)..... 8

Stewart E. Sterk, *Property Rules, Liability Rules, and Uncertainty About Property Rights*, 106 Mich. L. Rev. 1285 (2008)..... 9

Harry Surden, *Efficient Uncertainty in Patent Interpretation*, 68 Wash. & Lee L. Rev. 1737 (2011)..... 6

U.S. Patent and Trademark Office, *Discussion Regarding Strategies for Improving Claim Clarity: Glossary Use in Defining Terms*, http://www.uspto.gov/patents/init_events/glossary_pilot.pdf. 22

U.S. Patent and Trademark Office, *Manual of Patent Examining Procedure* (2012) ..16, 18, 19

Page(s)

U.S. Patent and Trademark Office, U.S. Patent Statistics Chart, http://www.uspto.gov/web/offices/ac/ido/oeip/taf/us_stat.htm 22

R. Polk Wagner, *Understanding Patent-Quality Mechanisms*, 157 U. Pa. L. Rev. 2135 (2009) 23

Harold Wegner, *The End of Equivalents? Examining the Fallout from* Festo, 13 Fordham Intell. Prop. Media & Ent. L.J. 727 (2003) 19

INTEREST OF *AMICUS CURIAE*[1]

Microsoft Corporation is a leader in the technology industry, and an active and longstanding player in the patent system. As such, Microsoft invests heavily to research and develop innovative technologies for both individuals and businesses. These products run the gamut: from operating systems (Microsoft Windows), to essential software applications for writing (Microsoft Word), communicating (Microsoft Outlook), and searching the Internet (Bing), to hardware for computing (Microsoft Surface tablet) and gaming (Xbox 360). Microsoft has protected its massive investment with more than 35,000 patents. In addition, Microsoft is an active participant in the licensing and secondary patent markets, which are a source of both revenue and access to technology, thereby allowing Microsoft to leverage its own creativity and innovation. And, although Microsoft would prefer to avoid litigation, it often finds itself in court, whether defending against allegations of infringement or protecting its own patent rights.

In short, Microsoft is one of the most active participants in every key aspect of the patent system, from the alpha of prosecuting its own patents to the omega of litigating patent infringement. Microsoft therefore has a keen interest in a patent system that

---

[1] The parties have consented to the filing of this brief. No counsel for a party authored this brief in whole or in part, and no counsel or party made a monetary contribution intended to fund the preparation or submission of this brief. No person other than *amicus curiae* or its counsel made a monetary contribution to its preparation or submission.

is fair and predictable. Those twin goals are essential for undertaking innovation, running a business based on that innovation, and generating value for shareholders. But in practice, the patent litigation system often falls short. A principal reason is the vague and indeterminate way in which patent claims commonly are drafted—a practice that is facilitated by the Federal Circuit's toothless standard for definiteness. Microsoft submits this brief to urge the Court to return the test for definiteness to its textual moorings. Sending a clear signal to prospective patentees that they must draft their claims with the clarity that the statute demands would cause a variety of salutary effects to ripple through the entire patent system.

INTRODUCTION AND SUMMARY OF ARGUMENT

Notice is an essential feature of property systems. *Festo Corp. v. Shoketsu Kinzoku Kogyo Kabushiki Co.*, 535 U.S. 722, 730 (2002); James Bessen & Michael Meurer, *Patent Failure: How Judges, Bureaucrats and Lawyers Put Innovators at Risk* 9 (2008) [hereinafter *Patent Failure*]. Notice permits parties to order their affairs in a way that maximizes their own rights and entitlements, and avoids treading on others'. *Id.* at 9-11, 46. Effective notice also enables parties, "when desirable, [to] negotiate permission to use property." *Id.* at 46. And, clear boundaries make disputes easier and cheaper to resolve. *Id.*; *see generally* Federal Trade Commission (FTC), *The Evolving IP Marketplace: Aligning Patent Notice and Remedies with Competition*, 3-5, 76

(2011) [hereinafter *Aligning Patent Notice*]. Simply put, good fences make good neighbors.

Like other property systems, the patent system depends on clear notice. Clearly demarcated boundaries of existing patents are essential so that future innovators can know what is fenced off and what is not, and can conform their conduct. The Patent Act therefore mandates in plain, explicit terms that a patent "conclude with one or more claims *particularly pointing out* and *distinctly claiming* the subject matter which the inventor ... regards as the invention." 35 U.S.C. § 112(b) (emphasis added). Patentholders must "inform the public during the life of the patent of the limits of the monopoly asserted, so that it may be known which features may be safely used or manufactured without a license and which may not." *Permutit Co. v. Graver Corp.*, 284 U.S. 52, 60 (1931). In short, clear notice to the public is the quo a patent holder must provide for the quid of a limited exclusionary right.

The burden of providing notice rests squarely with the patent applicant, who is charged with drafting the claims. This is no accident: It is far easier and cheaper for a patent applicant to spell out the metes and bounds of her invention than it is for others to attempt to divine them from vague descriptions. *See Halliburton Energy Servs., Inc. v. M-I LLC*, 514 F.3d 1244, 1255 (Fed. Cir. 2008). In the parlance of the law and economics literature, the patent applicant is the "cheapest cost avoider." So, just as in analogous circumstances involving property and contract law, the burden of clarity properly rests with the drafter.

Rigorously enforcing a definiteness requirement that is faithful to the statutory text places no undue burden on the patentee. On the contrary, the existing system of examining, approving, and amending patents provides applicants with ample opportunity to satisfy their statutory obligation. Patent examination by the U.S. Patent and Trademark Office (PTO) is an iterative and interactive process in which an applicant can get guidance from professionals (including the PTO examiner himself). The applicant may submit multiple patents with multiple claims, and can seek claims with varying levels of precision and breadth—thereby minimizing the likelihood that a good-faith applicant will be deprived of the value of her inventive contribution when the definiteness standard is rigorously applied. And, because of the opportunity to seek amendment, continuation, or reissuance of existing claims, an applicant gets numerous bites at the apple.

In the current system, however, not all patentees *want* to provide good notice, and often they are not forced to do so. On the contrary, there are strong incentives to define inventions in vague and malleable terms: "Vague language can be read narrowly when necessary to avoid prior art, and broadly when possible to ensnare third party technology." Bessen & Meurer, *Patent Failure*, *supra*, at 239. Vague patents are therefore particularly valuable to patent assertion entities (PAEs) and others who aim principally to earn money through litigation—as well as anyone who wishes to maximize the scope of their intellectual property through the *in terrorem* effect of the vague patent. Thus, in order to motivate patentees to draft claims with the requisite clarity, it is essen-

tial that the courts hew to the statutory standard for definiteness, and make clear that they will enforce it by invalidating indefinite patent claims.

Instead, however, "patent law has failed to accomplish one of its essential missions: allowing interested parties to understand a patent's scope in a consistent and predictable manner." Michael Risch, *The Failure of Public Notice in Patent Prosecution*, 21 Harv. J.L. & Tech. 179, 180 (2007). The current standard articulated by the Federal Circuit—that § 112(b) is satisfied so long as claim language is not "insolubly ambiguous"—is effectively useless as a tool to require patentees to define the scope of their rights. *See* FTC, *Aligning Patent Notice*, *supra*, at 95-96. As a result, would-be innovators confront a minefield of indeterminate patents, and the constant fear that their next step could trigger a patent infringement suit, a massive damages award, and even a crippling injunction. This untenable state of affairs inflicts waste, distorts competition, and hinders innovation. And these difficulties could be ameliorated, if not avoided altogether, if patent applicants were required to provide clear notice—a modest step at a fraction of the cost of these dead-weight losses. In short, the Court will accomplish inestimable good if it simply repudiates the Federal Circuit's standard. A patent claim is indefinite unless the inventor "particularly point[s] out and distinctly claim[s]" the subject matter of the invention. 35 U.S.C. § 112(b). Merely avoiding "insoluble ambiguity" does not remotely satisfy that standard.

ARGUMENT

I. THE STANDARD FOR DEFINITENESS SHOULD ACCOUNT FOR THE FACT THAT PATENT APPLICANTS ARE THE ONES BEST ABLE TO AVOID THE COSTS OF NOTICE FAILURE.

Notice failure imposes systemic costs. A competitor that does not know the state of the art cannot develop new technologies at full speed, lest it sink costs now only to discover inadvertent infringement later. The resulting uncertainty undermines the core purposes of the system of private patent rights—increasing the store of public knowledge, and incentivizing the creation of inventions that otherwise would not be produced. Harry Surden, *Efficient Uncertainty in Patent Interpretation*, 68 Wash. & Lee L. Rev. 1737, 1747 (2011). Courts, scholars, and policymakers have all identified notice failure as a major challenge confronting the patent system. Bessen & Meurer, *Patent Failure*, *supra*, at 9; *Festo*, 535 U.S. at 730-31; FTC, *Aligning Patent Notice*, *supra*, at 74-75. And in this system of economic incentives, there is one player who can most cheaply avoid the drag on innovation otherwise caused by ill-defined patent lines. It is not the patent examiner, the district court, or the court of appeals, and it certainly is not the accused infringer. It is the patentee, who has ample tools available to draft and prosecute clear patent claims.

A. The Responsibility For Avoiding The Costs Of Notice Failure Should Rest With The Party Best Positioned to Do So.

No one knows better than an inventor what it is that she invented, and it is the inventor who can best articulate—aided by patent prosecutors who reduce her invention to a written disclosure—what her patent means to claim for its limited monopoly. That is why the applicant is required to provide this information to the public through the patent application, rather than leaving the public to figure it out. This requirement is what the law and economics literature calls a rule of "cheapest cost avoidance": The actor in the best position to avoid a socially harmful cost should be incentivized to do so. Guido Calabresi, *The Cost of Accidents: A Legal and Economic Analysis* 135 (1970); *see* Jules L. Coleman, *The Structure of Tort Law*, 97 Yale L.J. 1233 (1988) (discussing William Landes & Richard A. Posner, *The Economic Structure of Tort Law* (1987) and Steven Shavell, *Economic Analysis of Accident Law* (1987)).

This principle applies across a variety of contexts in which a party establishes legal rights through a written document. For instance, a patent is a species of property right,[2] and property is a domain in which

---

[2] "The [patent] monopoly is a property right; and like any property right, its boundaries should be clear." *Festo*, 535 U.S. at 730; *Bonito Boats, Inc. v. Thunder Craft Boats, Inc.*, 489 U.S. 141, 149 (1989) ("[T]he federal patent scheme creates a limited opportunity to obtain a property right in an idea."); *see generally* Frank H. Easterbrook, *Intellectual Property is Still Property*, 13 Harv. J.L. & Pub. Pol'y 108 (1990).

notice of boundaries is essential: Effective property systems require a "reliable, cost-effective system for providing notice, as well as the right set of incentives for responding to notice once it is given." Herbert Hovenkamp, *Notice and Patent Remedies*, 88 Tex. L. Rev. 221, 224 (2011) [hereinafter *Notice*]; Bessen & Meurer, *Patent Failure*, *supra*, at 46 ("A successful property system establishes clear, easily determined rights. Clarity promotes efficiency because 'strangers' to a property can avoid trespass and other violation of property rights, and, when desirable, negotiate permission to use the property.").

Such a system depends on a public mechanism for recording property titles that imposes clear duties on private actors, who properly and most efficiently bear this burden. Hovenkamp, *Notice*, *supra*, at 225; Joseph W. Singer, *Property Law: Rules, Policies, and Practices* 783-84 (4th ed. 2006) ("Every state has passed a recording act, which provides for a central registry at each locality ... —where holders of real property interests can submit copies of deeds, mortgages, leases, ... and the like."). Such a system avoids dead-weight losses suffered by developers in the form of sunk costs and property disputes. In short, "only rarely does someone invest millions of dollars constructing a building that encroaches on someone else's land without permission." Bessen & Meurer, *Patent Failure*, *supra*, at 8. Property law thus is replete with rules that are informed by a cheapest cost avoider analysis.[3]

---

[3] *See, e.g.*, Joyce Palomar, *Patton and Palomar on Land Titles* § 17 (3d ed. 2003) (discussing cheapest cost avoider rationale for

Similar principles are prevalent in contract law. Most closely relevant here is the venerable principle that ambiguities in contracts should be construed against the drafter: "[I]n choosing among the reasonable meanings ... that meaning is generally preferred which operates against the party who supplies the words or from whom a writing otherwise proceeds." Restatement (Second) of Contracts § 206 (1981); *United States v. Seckinger*, 397 U.S. 203, 210 (1970) ("[A] contract should be construed most strongly against the drafter."). Default contract rules properly penalize (and thereby deter) negligent behavior in contracting, including by discouraging actors from withholding information that might increase net social welfare. *See generally* Ian Ayres & Robert Gertner, *Filling Gaps in Incomplete Contracts: An Economic Theory of Default Rules*, 99 Yale L.J. 87, 97-100, 105 n.80 (1989). It is especially notable that this principle applies to contract law, in which parties presumptively are bargaining as equals, unlike the patent domain, in which the applicant has information, the patent examiner does not, and the prospective accused is not even in the conversation.

This same principle of least-cost-avoidance applies with equal force where patents are concerned:

---

requirement of notice under recording statutes); Thomas W. Merrill & Henry E. Smith, *The Oxford Introduction to U.S. Law: Property* 173 (2010) (discussing the operation of cheapest cost avoider principle in the presence of a "good faith purchaser for value"); Stewart E. Sterk, *Property Rules, Liability Rules, and Uncertainty About Property Rights*, 106 Mich. L. Rev. 1285, 1315 (2008) (owners are the cheapest cost avoiders of mistaken encroachment onto land).

> The Supreme Court, in accordance with common law courts and academic commentators, has adopted a rule of [contract] construction against the drafter as the least-cost alternative. The same principles that guided the Supreme Court in contract interpretation also apply in patent claim construction. When the drafter is in the best position to defend against ambiguous terms, placing the onus on the drafter to be explicit provides for the most efficient result.

Ian A. Lampl, *Establishing Rules for Resolving* Markman *Failures*, 72 U. Chi. L. Rev. 1025, 1041 (2005).[4] In short, the patent applicant is "the lowest cost-avoider of confusion and ambiguity." FTC, *Aligning Patent Notice*, *supra*, at 98 & n.160 (testimony of David Kappos); *see Halliburton*, 514 F.3d at 1255 ("[T]he patent drafter is in the best position to resolve the ambiguity in patent claims."). This is because "the cost of providing notice of a particular property right is almost always less than the cost of

---

[4] *Accord* Jay P. Kesan & Marc Banik, *Patents as Incomplete Contracts: Aligning Incentives for R&D Investment with Incentives to Disclose Prior Art*, 2 Wash. U. J.L. & Pol'y 23, 53 (2000) ("The optimal policy for high technology inventions ... provides incentives for well-informed patentees to reveal information regarding the relevant prior art to the PTO during patent prosecution. This is consonant with a body of contracting literature that proposes that when parties are asymmetrically informed, default rules that penalize the more informed party will be welfare enhancing by inducing that party to reveal information.").

searching among many." Herbert Hovenkamp, *Competition for Innovation*, 2012 Colum. Bus. L. Rev. 799 (2012). Thus, by placing the onus for clarity on the applicant through a robust indefiniteness standard, any "penumbra" around the scope of a patent will be removed, "releasing business planning from being held hostage." FTC, *Aligning Patent Notice, supra*, at 98. And, if this is done during patent prosecution, it can be resolved by "requiring only a claim amendment from the party best able to add clarity." *Id.*

It should be common ground that "an effective notice system, in which prospective technology users can ascertain applicable rights at reasonable cost and with reasonable certainty is essential for patents to operate as a property system." *Id.* at 74.

> The real property system recognizes this, and even though real property rights are far more tangible, has created a highly effective notice system. We don't have an industry of "real property trolls" who have placed non-development covenants in land and lie in wait for some unsuspecting developer. The reason is simple: Notice is clear, the landowner must supply it, and the penalty for not supplying it is loss of the right.

Hovenkamp, *Competition for Innovation, supra*, at 827. The same incentives should be brought to bear in the patent system.

B. Patent Applicants Have Every Opportunity To Draft And Obtain Clear Patents.

If the system for obtaining patents were punitive or obscure, then perhaps patent applicants might be forgiven for failing to provide the requisite clarity. But the examination process is quite the opposite. Inventors, aided by professional patent prosecutors and detailed claim-drafting manuals, are permitted to submit numerous variations on their patent claims, with varying degrees of specificity, and they get not just second chances to keep refining their claims—but indeed, as many chances as they want. This does not mean that all or even most applicants are seeking to achieve clarity; on the contrary, they are not being required to do so, and many do not want to do so, for reasons we discuss below. But there are ample opportunities to meet this statutory requirement, so an applicant who strives in good faith to draft definite claims will not later be deprived of patent rights by unavoidable or unforeseen findings of indefiniteness. Accordingly, there is every reason to enforce the rigorous statutory language as it is written.

1. Drafting patent claims is an art. Prospective patentees thus draft patents with the assistance of professionals, who themselves are aided by a variety of resources, including reference materials published by the PTO itself. Foremost among these is the Manual of Patent Examining Procedure (MPEP), which provides

> patent examiners, applicants, attorneys, agents, and representatives of applicants with a reference work on the practices and procedures relative to the prosecution of patent applications before the USPTO. It contains instructions to examiners, as well as other material in the nature of information and interpretation, and outlines the current procedures which the examiners are required or authorized to follow in appropriate cases in the normal examination of a patent application.

Foreword to the MPEP, *available at* http://www.uspto.gov/web/offices/pac/mpep/mpep-0015-foreword.html. In addition, the PTO has promulgated materials that give guidance to the patent-examiner corps—and thereby to the public—about how patents should be examined. Relevant here, these include Supplementary Examination Guidelines for Determining Compliance with 35 U.S.C. § 112 and for Treatment of Related Issues in Patent Applications. *See* 76 Fed. Reg. 7162 (Feb. 9, 2011) [hereinafter *Supplementary Examination Guidelines*]. And there are numerous reference materials that provide patent drafters concise instructions about how to draft patent claims. *E.g.*, Robert C. Faber, *Faber on Mechanics of Patent Claim Drafting* (6th ed. 2013).

2. When the applicant sits down to draft patent claims, numerous tools are available to aid in achieving the requisite specificity (in addition to simple drafting choices and use of language). First and

foremost, she is not limited to submitting a single patent claim (which, if such a limitation did apply, might limit the applicant to a binary choice between writing a claim narrowly or broadly). On the contrary, the average patent contains 15-20 claims.[5] And this is not because multiple inventions are being packed into a single patent; rather, in order to be joined in a patent, the claims must be related. *See* 37 C.F.R. §§ 1.141(a), 1.142. Thus, the patentee is not required to take one shot for all the marbles. *See generally* Kelly Casey Mullally, *Legal (Un)certainty, Legal Process, and Patent Law*, 43 Loy. L.A. L. Rev. 1109, 1139 (2010).

In addition to submitting multiple claims, the applicant may calibrate the specificity of the claims by using, among other options, a device known as a "dependent claim." Each patent must contain one or more *independent* claims, each of which stands on its own and sets forth all of the "limitations" that (like the elements of a civil cause of action) must be satisfied for infringement to be proven. Faber, *supra*, at § 2.10; *see* Federal Circuit Bar Association, *Federal Circuit Bar Association Model Patent Jury Instruction* B.2.2a (2012). A *dependent* claim refers back to an independent claim, incorporates each of the independent claim's limitations, and adds one or more additional limitations. 35 U.S.C. § 112(d) ("A claim in dependent form shall contain a reference to a claim previously set forth *and then specify a further limita-*

---

[5] *See* Posting of Dennis Crouch, *Claims in Issued Patents*, Patently-O Blog (Feb. 22, 2013), http://patentlyo.com/patent/2013/02/claims-in-issued-patents.html.

tion of the subject matter claimed." (emphasis added)); *see* Faber, *supra*, § 2.9. The dependent claim is, by definition, narrower in scope than the claim from which it depends. *Id.*; *see also* 37 C.F.R. § 1.75(c).

Thus, without surrendering anything or suffering any prejudice, the applicant can elect to draft some claims broadly, and others narrowly. Patent-drafting manuals recommend precisely this approach for the very purpose of maintaining flexibility in the face of invalidity concerns:

> Some claims should cover the concept as broadly as possible.... Some claims should be sufficiently detailed that even if the broad claims covering the inventor's concept are held invalid, anyone who copies any of the inventor's disclosed preferred embodiments will infringe a valid detailed claim.... The claim drafter should preferably have a claim generic to all alternatives and to all embodiments, in addition to other claims specific to particular ones of the alternatives or embodiments.

Faber, *supra*, § 10:1.1 at 10-2 to 10-4. Because each claim stands or falls on its own,[6] the inclusion of both broad and narrow claims serves as a powerful hedge against potential invalidity.

---

[6] 35 U.S.C. § 282; *see Lemelson v. TRW, Inc.*, 760 F.2d 1254, 1267 (Fed. Cir. 1985) ("[T]he scope of each individual claim must be examined on its own merits, apart from that of other claims, even in the same patent.").

3. After the application has been submitted to the PTO, there remain numerous opportunities for the applicant to provide additional clarity by means of an iterative, collaborative process with the patent examiner.

Each patent application is reviewed by an examiner to assess, among other things, whether the patent is valid. *See* Irah H. Donner, *Patent Prosecution: Law, Practice and Procedure*, ch.2.IV. (8th ed. 2013); MPEP § 700 *et seq.* When that initial review is complete, the PTO issues a "[f]irst office action," which sets forth the bases (if any) for rejecting the patent. 37 C.F.R. §§ 1.104-1.106; MPEP § 707; Donner, *supra*, ch.2.V. With regard to definiteness, the examiner is "encouraged to suggest claim language to applicants to improve the clarity or precision of the language used." MPEP § 2173.02(II); *see Halliburton*, 514 F.3d at 1255 ("[I]t is highly desirable that patent examiners demand that applicants [resolve the ambiguity] in appropriate circumstances so that the patent can be amended during prosecution rather than attempting to resolve the ambiguity in litigation.").

In response to this feedback, the inventor has the opportunity to submit a formal written response, either explaining why the examiner is wrong, or proposing to amend the claims. Donner, *supra*, ch.2.VI.; *see also* MPEP §§ 714, 716. The examiner then further reviews the patent, either allowing it or issuing another office action. Donner, *supra*, ch.2.VIII; *see generally* Mark Lemley & Bhaven Sampat, *Examining Patent Examination*, 2010 Stan. Tech. L. Rev. 2, ¶ 12, http://stlr.stanford.edu/pdf/lemley-sampat-

examining-patent.pdf (empirical study suggests that "the vast majority of ... applicants who obtain patents and those who are still actively trying to do so, do so in part by amending their claims in response to examiner concerns"). And, even after a "final rejection," the applicant can *still* keep examination going by means of a Request for Continued Examination (RCE). *See* 37 C.F.R. § 1.114. Thus, the "continuing negotiation between examiner and applicant does not end with an initial or even a final rejection." Lemley & Sampat, *supra*, ¶ 33.

In addition to the written back-and-forth in which examiner and applicant may endeavor to clarify the claims, the applicant also can ask the examiner for an interview. Donner, *supra*, ch.2.VII. The interview affords the applicant yet another opportunity to discuss concerns about invalidity. The PTO's guidelines concerning § 112 specifically encourage examiners to reach out to applicants when indefiniteness is the only defect, so that this issue may be resolved through an interview rather than in a written rejection. *Supplementary Examination Guidelines*, 76 Fed. Reg. at 7169-70.[7]

---

[7] It is noteworthy that, although this process is one that offers the applicant every opportunity to achieve clarity—and therefore is good reason to hold the applicant to a clear notice standard—the current practice often does not generate information that provides notice to the public. The interviews, for instance, are not typically transcribed. "Because interviews are not recorded, and because examiner records of interviews almost never include any useful information, interviews are often thought by practitioners as a way to explain the invention (and perhaps make concessions) without creating prosecution history that binds the applicant in later litigation." Lemley &

4. Finally, a patentee has still further mechanisms to address concerns about definiteness even after a patent has issued. Foremost among these is the use of "continuation applications." Such an application can claim the benefit of a previously filed parent application, so long as there is overlap in inventorship and in the subject matter of the applications. 35 U.S.C. § 120; MPEP § 201.07; *see generally* Donner, *supra*, ch.12.V.A; *Transco Prods., Inc. v. Performance Contracting, Inc.*, 38 F.3d 551, 555-56 (Fed. Cir. 1994). As a practical matter, "[w]hen a continuation application is filed, the prosecution process ... starts over. The continuation application is treated just like a new application, giving the applicant another set of chances to persuade the examiner to allow the claims, to further amend the claims, or even to hope to get a different examiner." Lemley & Moore, *supra*, at 68. Or, put more directly: "[Y]ou take whatever claims you can, you file a continuation with a disclaimer, and then you keep that new case pending forever and ever and ever, and then you add claims when you need them.... We do it all

---

Sampat, *supra*, ¶ 15; Mark A. Lemley & Kimberly A. Moore, *Ending Abuse of Patent Continuations*, 84 B.U. L. Rev. 63, 67-68 & nn.10-11 (2004). And, even when materials are submitted in writing, often they will not be held against the applicant in a subsequent dispute over the scope or meaning of the claims. *See, e.g., SuperGuideCorp. v. DirecTV Enters., Inc.*, 358 F.3d 870, 875 (Fed. Cir. 2004) ("[P]rosecution history may not be used to infer the intentional narrowing of a claim absent the applicant's clear disavowal of claim coverage."); *Athletic Alternatives, Inc. v. Prince Mfg., Inc.*, 73 F.3d 1573, 1580 (Fed. Cir. 1996) (because contradictory interpretive strands can run through the prosecution history, the file wrapper may be "unhelpful as an interpretive resource").

the time." Harold Wegner, *The End of Equivalents? Examining the Fallout from* Festo, 13 Fordham Intell. Prop., Media & Ent. L. J. 727, 742 (2003).

Another common option is reissuance. If a patent is believed to be invalid due to some error in its specification or the scope of the claim, then a patentee may seek a reissued patent that corrects the error. 35 U.S.C. § 251; *see* MPEP § 1401 *et seq.* Thus, without the burden of litigation, a patentee may use reissue to fix problems in existing claim language. *See* Donner, *supra*, ch.14.II.E. "[A]dding a dependent claim as a hedge against possible invalidity is a proper reason to seek reissue." *In re Tanaka*, 640 F.3d 1246, 1249-50 (Fed. Cir. 2011). In addition, the recently enacted America Invents Act, Pub. L. No. 112-29, 125 Stat. 284 (2011), establishes additional avenues to correct errors in issued patents. Under 35 U.S.C. § 257, a patent owner can request a supplemental examination of a patent "to consider, reconsider, or correct information believed to be relevant to the patent." Similarly, if a patentee has had its patent subjected to the new Post-Grant Review process for reassessing the validity of issued patents, 35 U.S.C. §§ 321-329, the patentee itself can seek to amend a challenged patent, *see* 37 C.F.R. § 42.221.

II. A PATENT SYSTEM THAT FAILS TO REQUIRE SUFFICIENT CLARITY WILL GIVE RISE TO RAMPANT NOTICE FAILURE, THEREBY IMPOSING HUGE COSTS ON INNOCENT ACTORS.

For all of the reasons just discussed, patentees who wish to draft good patents have numerous tools

at their disposal to do so, and it is appropriate to place the burden of giving fair notice on them. The existing patent-examination system provides the good-faith applicant with every opportunity to draft clear patent claims. But in the absence of judicial enforcement, incentives run in the opposite direction—which is why in the current environment, clear patents are not drafted—and the result is enormous dead-weight losses that are antithetical to the innovation the system is meant to encourage.

A. Patent Applicants Have Strong Incentives To Avoid Providing Clear Notice.

1. Merely providing a means of giving notice is not enough. Applicants must be required to use and comply with the system, because without judicial enforcement, many patentees will respond to a powerful and competing incentive: "to allow claims to remain vague so that they can mold the claims to fit the future product of a currently unknown, potential infringer or to avoid invalidation if previously undiscovered prior art comes to light." Risch, *supra*, at 188.

Judges, academics, and the Federal Trade Commission all have recognized that patent applicants stand to reap great benefits if they can obtain a vaguely worded patent. Accordingly,

> the art of broad claim drafting is a prized talent—clients are openly urged to use broad patent protection both offensively to block competitors from

> the marketplace, and defensively to serve as a bargaining chip against potential patent infringement suits and to file patents to cover all aspects of the core technology ... to create a picket fence of protection.

Enzo Biochem, Inc. v. Applera Corp., 605 F.3d 1347, 1348 n.2 (Fed. Cir. 2010) (Plager, J., dissenting from denial of reh'g) (internal quotation marks and citation omitted); *accord* FTC, *Aligning Patent Notice*, *supra*, at 85 ("[A]pplicants try to be 'as vague as possible, avoid any expression of meaning with the hope that when they get to litigation, they can broaden the meaning beyond what the Patent Office assumed it was.'" (internal quotation marks omitted; citing testimony by David Kappos and Professors R. Polk Wagner and Lee Petherbridge)); Stephen M. McJohn, *Patents: Hiding From History*, 24 Santa Clara Comp. & High Tech. L.J. 961, 971 (2008) ("[E]xperts in claim drafting offer the following advice to inventors and patent drafters: Do not define the terms used in your claims; do not identify the category of invention in the preamble to the claims; do not identify features of the invention as 'important'; and do not even use the word 'invention' in the written description. Such claim drafting has been described as a trend toward intentional obscurity.'").

The problem has become so severe that the PTO is considering implementing a program that would have applicants include glossaries for claim terms. PTO, *Discussion Regarding Strategies for Improving Claim Clarity: Glossary Use in Defining Terms*,

§ II.C, *at* http://www.uspto.gov/patents/init_events/glossary_pilot.pdf. But even that program as conceived would be voluntary. And in the meantime, current law allows patentees to get away with language that can be twisted through attorney argument in strategic response to events in litigation—broadened when necessary to capture infringement yet narrowed strategically to avoid prior art (and therefore invalidity challenges) when it suits the occasion.

2. The patent-examination process has proven insufficient to stand up to these overwhelming incentives. In part this is a simple question of resources. In 2013, the PTO received over half a million applications for utility patents, a number that has been on the rise for decades. PTO, U.S. Patent Statistics Chart, http://www.uspto.gov/web/offices/ac/ido/oeip/taf/us_stat.htm. Thus, even estimating conservatively, *cf. supra* n.5 (15-20 claims per patent), the PTO faces millions of patent claims per year. Simply put, the PTO has a lot on its plate. *See generally* Dan L. Burk & Mark A. Lemley, *The Patent Crisis and How the Courts Can Solve It* 23 (2009).

Patent examiners, moreover, no matter how learned or eager, are at a substantial disadvantage in examining the patents that cross their desks. Inventors spend entire careers immersed in their discipline, the literature, and the problems they are trying to solve. The resulting patents cover the most complicated technology at the cutting edge of science—semiconductor packaging, DNA sequencing, and everything else the human mind can imagine. A

patent examiner cannot possibly develop the technical mastery necessary to police the definiteness of each and every claim that she evaluates. *See generally* R. Polk Wagner, *Understanding Patent-Quality Mechanisms*, 157 U. Pa. L. Rev. 2135, 2147-49 (2009) (discussing the dynamics at play during patent examination). Certainly the examiner cannot imagine, for each claim she examines, every potential interpretation that the patentee may assert in litigation someday, and assess the definiteness of each such potential construction—especially if the claim has been deliberately drafted to be malleable. *Cf.* Lampl, *supra*, at 1040-41 ("The patent drafter is in a better position than the patent examiner to define the patent's proper scope since the patent drafter has greater awareness of the critical terms."). Even if it were possible to do so, it is not clear that the agency would, from a cost-benefit perspective, choose to perform examinations with this level of rigor. "Very few patents have real marketplace value," Lee Petherbridge, *On the Development of Patent Law*, 43 Loy. L.A. L. Rev. 893, 901 (2010), and "the overwhelming majority of patents are never litigated or even licensed," Mark A. Lemley, *Rational Ignorance at the Patent Office*, 95 Nw. U. L. Rev. 1495, 1497 (2001).

3. The upshot of all of this is that "the Patent Office's examination of claims of invention in patent applications is intended to be nothing more than a rough first cut at determining the validity of the claims." Petherbridge, *supra*, at 901 (internal quotation marks omitted). Accordingly, the notice requirement that lies at the heart of the patent system must be articulated by the courts, and backed by a meaningful threat that courts will invalidate indefi-

nite patent claims. For "although 35 U.S.C. § 112 requires clear and adequate disclosure as well as clear and distinct claim language," the PTO "rejects fewer patent applications for § 112 disclosure problems than for any prior art problems and virtually never provides a detailed analysis of claim language, meaning that serious § 112 analysis is left for litigation." Wagner, *supra*, at 1150.

The Federal Circuit, however, has articulated a test for indefiniteness that is the polar opposite of the particularity and definiteness that the statutory text demands, and that court rarely determines any claim to be indefinite. This lax approach is well known among patent litigants. We will not belabor this point here, as it is well covered in the principal merits briefing. Suffice it to say that the Federal Circuit's pledge not to invalidate a claim as indefinite unless it is "insolubly ambiguous," Pet. App. 13a (quoting *Datamize, LLC v. Plumtree Software, Inc.*, 417 F.3d 1342, 1347 (Fed. Cir. 2005)), by its terms "accepts substantial ambiguity and preserves claims that require a court to make hard choices among varying interpretations." FTC, *Aligning Patent Notice*, *supra*, at 99.

Because there is no meaningful pressure to draft claims with precision, ambiguity reigns, and so in most cases, "several persons of ordinary skill come up with competing but plausible interpretations of a disputed term." *Applera*, 605 F.3d at 1348 (Plager, J., dissenting from denial of reh'g). Uncertainty is magnified by the fact that the Federal Circuit has proved notoriously panel-dependent when it comes to interpreting claim language, and reversal rates are

high when it comes to claim construction.[8] In short, "it is not until three court of appeals judges randomly selected ... pick the 'right' interpretation that the public, not to mention the patentee and its competitors, know what the patent actually claims." *Id.* The failure to provide clear notice imposes massive costs on the patent system, as we discuss next.

B. Notice Failure Distorts the Patent System, Imposes Huge Costs, and Hinders Innovation.

When the notice function fails, the costs imposed on actors in the patent system are massive and widespread. This is because the patent system offers no inexpensive way to resolve notice problems when the patent applicant has failed to apprise the public of the perimeters of her invention. And the risks of notice failure are amplified by other features of the patent system—litigation costs and potentially draconian remedies. Without clear notice of what is fenced off and what is *terra nullius*, the patent world is a dangerous place in which to do business. "Patent infringement is a strict liability tort in the sense that a defendant may be liable without having had any

---

[8] *See generally Retractable Techs., Inc. v. Becton Dickinson and Co.*, 659 F.3d 1369 (Fed. Cir. 2011) (Moore, J., dissenting from denial of reh'g en banc); J. Jonas Anderson & Peter S. Menell, *Informal Deference: An Historical, Empirical, and Normative Analysis of Patent Claim Construction*, 108 Nw. U.L. Rev. __ (forthcoming 2013) (manuscript at 35), *available at* http://papers.ssrn.com/sol3/papers.cfm?abstract_id=2150360; Richard S. Gruner, *How High is Too High?: Reflections on the Sources and Meaning of Claim Construction Reversal Rates at the Federal Circuit*, 43 Loy. L.A. L. Rev. 981, 994-1001 (2010).

notice, prior to the filing of an infringement action, that her conduct was infringing." Roger D. Blair & Thomas F. Cotter, *Strict Liability and Its Alternatives in Patent Law*, 17 Berkeley Tech. L.J. 799, 800 (2002). So the absence of good notice "make[s] innovation ... much like walking through a mine field." F.M. Scherer, *New Perspectives on Economic Growth and Technological Innovation* 87 (1999). Avoiding the mines is costly when it is possible. It can be ruinous when it is not.

1. *Indefiniteness Provides Disincentives to Innovate.* A consumer electronics firm is beginning the research and development phase of its plans to commercialize a new tablet computer. In a system with good notice, that firm could discern the state of the art. Clear notice would enable the firm to determine which technical avenues are open to exploration, and which must be designed around or licensed. As long as the metes and bounds of each patent are clearly demarcated, the firm can forge ahead with some assurance that the risk of sunk costs and inadvertent infringement is manageable.

In a patent system rife with notice failure, this is a fantasy. Innovators instead face a world of uncertainty, and "[u]ncertainty obviously makes business decisions based on patents ... much more difficult and costly." Wagner, *supra*, at 2140. When patent applicants fail to provide good notice, they externalize costs on the public, who must undertake expensive measures to navigate the state of the art in the dark, with the exorbitant expense of litigation, the risk of an unfavorable outcome, and a potentially crippling damages award or injunction looming. *See* Robin Feldman, *Intellectual Property Wrongs*, 18

Stan. J.L. Bus. & Fin. 250, 258 (2013) (the patent system is "plagued by ... 1) uncertainty regarding the boundaries of rights; 2) lack of a quick and reasonably priced method for resolving disputes regarding the boundaries of the rights; and 3) potential damages that are out of proportion to the nature of the harm.").

Would-be innovators face a series of undesirable options. Given the sheer number of potentially relevant patents, reviewing them all would be expensive even if they were clear; given that many of those patents are bound to be vague and ambiguous, the cost will be prohibitive.[9] The innovator can attempt to design around the patent—but if it is unclear what the patent covers, then a design-around cannot be undertaken with any assurance. The innovator can give the patent an *extra*-wide berth, but this approach amounts to a heavy tax on innovation—the patentee is gaining the benefit of a broader monopoly than it is entitled to, and the innovator must bear the cost of the extended detour around the patent and its penumbra. FTC, *Aligning Patent Notice*, *supra*, at 78 ("When patents provide poor notice of their scope, the resulting uncertainty may force a firm to incur these costs unnecessarily for patents that would not be held to cover their product, burdening innovative activities and raising prices.").

---

[9] *See generally* Bessen & Meurer, *Patent Failure*, *supra*, at 68-69 (discussing the proliferation of patents, and the increase in the number of claims per patent); Mark A. Lemley, *Ten Things to Do About Patent Holdup of Standards*, 48 B.C. L. Rev. 149, 151 (2007) [hereinafter Lemley, *Ten Things*] (same); FTC, *Aligning Patent Notice*, *supra*, at 90.

Or ultimately, the innovator may simply scrap its plans to innovate altogether. It is well-understood that poor notice imposes costs that lead in this very direction. "[A]n indefinite claim would tend to enlarge the practical scope of the patent beyond its lawful bounds by imposing legal risks on competitors, who would be buying an infringement suit if they mistook those bounds because the patent claim was unclear." William M. Landes & Richard A. Posner, *The Economic Structure of Intellectual Property Law* 324 (2003). "The expected cost of inadvertent infringement imposes a *dis*incentive on technology investors." Bessen & Meurer, *Patent Failure*, *supra*, at 9. Or, as the FTC put it most simply: "Poor patent notice may cause firms to cut back on procompetitive innovation .... [W]hen there is a lack of clarity around patent rights, firms routinely move away from technology areas, move into different technology areas, [and] steer clear of innovations that [they would] otherwise want to invest in." *Aligning Patent Notice*, *supra*, at 77 (last alteration in original).

2. *Indefiniteness Distorts Patent Markets.* Suppose that during the course of its research and development, our hypothetical firm decides that it would be beneficial to acquire or license the use of patents that read on, or relate to, its preferred power-delivery system for solid-state memory. It would then find itself searching the patent markets for options. The market it will find, however, is disfigured by notice failure. To begin with, it is of course more difficult to value rights that have uncertain scope. Moreover, whereas a vague patent theoretically should have diminished value to a

patent owner, the current "insolubly ambiguous" standard means that at least some actors in the patent system are likely to attach a *higher* value to such a patent. This is because such vagueness translates into the ability to read the claim in many different ways—a quality that is particularly valuable to patent assertion entities.

PAEs embrace a business model of generating royalties by asserting patents that the PAE itself does not practice. *See eBay Inc. v. MercExchange, L.L.C.*, 547 U.S. 388, 396 (2006) (Kennedy, J., concurring). Because PAEs by definition have no interest in commercializing the inventions disclosed in their patents, they are likely to value a patent based solely on its ability to generate royalty streams through litigation (or the threat thereof). And if PAE behavior is any indication, vagueness or ambiguity in a patent can *enhance* the patent's assertion value. *See* James Bessen & Michael Meurer, *The Direct Costs from NPE Disputes*, 99 Cornell L. Rev. ___ (forthcoming 2014) [hereinafter *Direct Costs*] (manuscript at 8, 20), *available at* http://papers.ssrn.com/col3/papers.cfm?abstract_id=2091210 (discussing PAEs' tendency to acquire and assert vague or weak patents). This is because the more malleable the patent, the more potential products it reads on, and the more potential defendants a PAE can target for royalties. Perversely, then, a PAE is likely to find a patent desirable for the very notice costs that sap the patent's value to an innovator. The result is a market price skewed higher than what is merited by the technology disclosed. But "there is no social value in a system that creates poorly defined

property rights just so entrepreneurial people are more likely to commit a trespass and then will have to pay the consequences." Herbert Hovenkamp, *Patents, Property, and Competition Policy*, 34 J. Corp. L. 1243, 1256 (2009) [hereinafter *Patents, Property, and Competition Policy*].

Notice failure has unique manifestations in the patent licensing context, and again, PAEs are front and center. Never is a firm in a more daunting bargaining position than when it cannot determine the need to license a patent until *after* it has brought a potentially infringing product to market. This is known as "lock-in." Robert P. Merges, *The Trouble with Trolls: Innovation, Rent-Seeking, and Patent Law Reform*, 24 Berkeley Tech. L.J. 1583, 1590-91 (2009). In a world of notice failure, lock-in is neither unlikely, nor necessarily the fault of the entity that has been locked in. *See supra* at 26-27. Nevertheless, the firm is in a lurch: "Even if [it] could quite easily have avoided infringing a patent if [it] had been aware of it before making the decision to choose this technology, [it] still faces an injunction that will impose disproportionate costs because of its irreversible investment." Lemley, *Ten Things*, *supra*, at 154.

Patentees are well aware that "remedies for ... infringement such as injunctive relief can provide [them] with much greater bargaining leverage after a developer has already sunk substantial resources into a project or product." Peter S. Menell & Michael Meurer, *Notice Failure and Notice Externalities*, J. Legal Analysis, Spring 2013, at 14. They use lock-in as a bargaining chip to extract licenses that are disproportionate to the

value of the rights they transfer. Indeed, PAEs have reaped enormous profits from lying in wait while large companies sink costs bringing products to market, only to pounce with a vague patent and a massive royalty demand once the product is released. Bessen & Meurer, *Direct Costs*, *supra*, at 20. This practice is known as "big game" hunting, *id.*, and a vague patent is the perfect weapon, because the more difficult it is to understand what the patent means, the more risky and expensive it is to litigate, *see infra* 31-34. The target often has no choice but to capitulate. The resulting license is wasteful: The patent holder has "capture[d] not just the value of the inventive contribution that they have made—something they ought to be entitled to—but also some greater amount of money than their invention is worth." Lemley, *Ten Things*, *supra*, at 152; Hovenkamp, *Patents, Property, and Competition Policy*, *supra*, at 1256-57. The more notice failure, the more lock-in; the more lock-in, the more rent-seeking and social waste.

3. *Indefiniteness Results in Costly Litigation.* At the end of the road, there lies the prospect of litigation, in the shadow of which these transactions all occur. "Perhaps the most obvious consequence of low patent quality is the increase in litigation observed over the past decade or so ...." Wagner, *supra*, at 2142-43. In the current patent system, infringement suits are a virtual inevitability for an innovator. Each year, a firm like Microsoft will receive innumerable letters offering to license or sell patents, or suggesting that Microsoft infringes a patent. Many will demand that Microsoft negotiate a license with respect to a patent that is vague or

ambiguous. And if Microsoft refuses to capitulate, it will find itself in court.

Never is the gap between the cost to a patent applicant of providing good notice, on the one hand, and the cost to the public of obtaining notice when the patent applicant fails, on the other, more stark. The cost of litigating a patent suit is enormous. "Mean legal costs per defense range from $420,000 for small/medium companies to $1.52 million for large companies." Bessen & Meurer, *Direct Costs*, *supra*, at 14. When more than $10 million is at risk—which is commonplace in the world of high-tech patent litigation—median litigation costs skyrocket to $3 million to $5 million. *See* American Intellectual Property Law Association, *Report of the Economic Survey*, at 34 (2013).

And it is not just that notice failure leads to litigation. Once the parties get there, the extraordinary sums they are likely to expend will in significant part go toward resolving the meaning of the very indefinite claims that caused the notice failure in the first place. Parties rarely agree upon the proper construction of the claims. As a result, claim construction "can involve considerable time, cost, and effort by plaintiffs, defendants, and the courts." Jonas McDavit, *Putting the Cart Before the Horse: Obstacles to Using Issue Preclusion in a Post-*Markman *World*, 34 AIPLA Q.J. 45, 46 (2006). The process commonly entails briefing, claim charts, expert testimony, and a lengthy hearing in open court. Vagueness has become so persistent, and claim-construction proceedings so burdensome, that courts have gone so far as to limit—by rule—the

number of claim terms they will construe.[10] It is difficult to imagine a world in which courts announced ahead of time that they would look only at a few words in a statute, or a predetermined number of provisions of a contract. That is the current world of patent litigation, because unlike in the contexts of contracts and real property, where parties have appropriate incentives to make clear their rights and obligations, patent applicants have every incentive to do the opposite.

In short, both party and judicial resources are being wasted by indefinite patents. Wagner, *supra*, at 2143 ("[A] greater number of uncertain patents means that litigation becomes more complex and expensive, adding to both the private and social costs of the system as a whole."). Judge Plager put it best:

> The court now spends a substantial amount of judicial resources trying to make sense of unclear, overbroad, and sometimes incoherent claim terms. It is time for us to move beyond sticking our fingers in the neverending leaks in the dike that supposedly defines and figuratively surrounds a claimed invention. Instead, we might spend some time figuring out how to support the PTO in requiring that the walls surrounding the claimed invention be

---

[10] *See, e.g.*, N.D. Ill. Loc. Pat. R. 4.1(b) ("No more than ten (10) terms or phrases may be presented to the Court for construction absent prior leave of court upon a showing of good cause."); N.D.N.Y. Loc. Pat. R. 4.4(b); W.D. Wash. Loc. Pat. R. 1329(c).

> made of something other than quicksand.

Applera, 605 F.3d at 1349 (Plager, J., dissenting from denial of reh'g). And ultimately, disputes over the meaning of the claims are only truly resolved when the last judgment issues. *See supra* at 24-25 (discussing *id.* at 1348). Case in point: here, four judges have interpreted the claim at issue three different ways, and after a decade of litigation, Nautilus *still* does not have a definitive answer as to what it means. Pet. at 5-6; Pet'r Br. 15-20.

* * *

Under the Federal Circuit's standard, the patent system has become just what this Court warned of more than half a century ago: "[a] zone of uncertainty which enterprise and experimentation may enter only at the risk of infringement claims." *United Carbon Co. v. Binney & Smith Co.*, 317 U.S. 228, 236 (1942). Such uncertainty chills innovation. An innovator that cannot discern the state of the art risks a costly infringement suit later on. One that plays it safe may design too far around an indefinite patent, or take an unnecessary license, wasting resources and hindering competition. Meanwhile, an industry has developed that uses this uncertainty—amplified by the threat and risk of litigation—to extort value from innovators. Put simply, the Federal Circuit's standard imposes widespread costs on the patent system. It has operated as a license to draft ambiguous patent claims. This is because every patentee knows that a court rarely if ever will hold a patent claim indefinite, so there is little disincentive to draft broad and indefinite claims, as against

significant gains to be had from a patent claim that can be twisted to suit current needs.

The Court should make clear to patentees, to the PTO, and to the federal courts alike that drafting clear patent claims is a fundamental requirement of the quid pro quo that justifies the patent monopoly, and that the current legal standard—and its attendant tax on innovation—is contrary to law. The "insolubly ambiguous" standard is flatly at odds with the statute, it is directly contrary to decades of this Court's precedents, and it should be squarely repudiated.

CONCLUSION

For the foregoing reasons, the decision of the Federal Circuit should be vacated or reversed.

Respectfully submitted,

T. Andrew Culbert
Isabella Fu
MICROSOFT CORPORATION
One Microsoft Way
Redmond, WA 98052

I. Neel Chatterjee
Monte Cooper
Misasha Suzuki
ORRICK, HERRINGTON &
SUTCLIFFE LLP
1000 Marsh Road
Menlo Park, CA 94025

E. Joshua Rosenkranz
Counsel of Record
Christopher J. Cariello
ORRICK, HERRINGTON &
SUTCLIFFE LLP
51 West 52nd Street
New York, NY 10019
(212) 506-5000
jrosenkranz@orrick.com

Eric A. Shumsky
ORRICK, HERRINGTON &
SUTCLIFFE LLP
Columbia Center
1152 15th Street, N.W.
Washington, D.C. 20005

March 3, 2014

AMICUS CURIAE BRIEF

RECORD AND BRIEFS

Supreme Court, U.S.
FILED
APR 2 - 2014
OFFICE OF THE CLERK

No. 13-369

IN THE

Supreme Court of the United States

NAUTILUS, INC.

Petitioner,

v.

BIOSIG INSTRUMENTS, INC.

Respondent.

On Writ of Certiorari to the United States Court of Appeals for the Federal Circuit

---

BRIEF OF NOKIA CORPORATION AND NOKIA USA INC. AS *AMICI CURIAE* IN SUPPORT OF RESPONDENT

RONALD ANTUSH
TODD LEITSTEIN
NOKIA CORPORATION
AND NOKIA USA INC.
6021 Connection Drive
Irving, Texas 75039

PATRICK J. FLINN
Counsel of Record
JOHN D. HAYNES
RISHI S. SUTHAR
ALSTON & BIRD LLP
1201 W. Peachtree St.
Atlanta, GA 30309
Tel. (404) 881-7000
patrick.flinn@alston.com

Counsel for Amici Curiae

April 2, 2014

WILSON-EPES PRINTING CO., INC. – (202) 789-0096 – WASHINGTON, D. C. 20002

Library of Congress
Law Library

TABLE OF CONTENTS

TABLE OF AUTHORITIES iii

INTEREST OF THE *AMICI CURIAE* 1

SUMMARY OF ARGUMENT 2

ARGUMENT 4

I. CHANGING THE STANDARD FOR INDEFINITENESS IS NOT THE APPROPRIATE VEHICLE FOR ADDRESSING THE HARMS FOR WHICH PETITIONER COMPLAINS 4

A. The Current Patent Laws Contain Adequate Avenues To Provide The Relief Petitioner Seeks 4

1. Claim Breadth May Be Better Resolved Through Prior Art Challenges 6

2. Overreaching On Claim Scope May Be Challenged As Lacking Written Description Support 7

B. The Federal Circuit's Application of § 112 Does Not Make It Impossible To Render Claims Indefinite 9

II. PETITIONER FAILS TO EXPLAIN THE ROLE OF CLAIM CONSTRUCTION UNDER ITS NEW STANDARD 11

A. Petitioner's Approach Contradicts Claim Construction's Fundamental Role In Resolving Reasonable Disputes Over Claim Meaning 11

B. Petitioner Offers Little Clarification When Claim Construction Would, Or Would Not, Be Appropriate Under Its Standard 14

CONCLUSION 16

TABLE OF AUTHORITIES

Page(s)

CASES

Autogiro Co. of America v. U.S.,
384 F.2d 391 (Ct. Cl. 1967) 13

Datamize, LLC v. Plumtree Software, Inc.,
417 F.3d 1342 (Fed. Cir. 2005)..... 5

Duncan v. Walker,
533 U.S. 167 (2001) 8

Ergo Licensing, LLC v. CareFusion 303, Inc.,
673 F.3d 1361 (Fed. Cir. 2012)..... 10

Exxon Chem. Patents, Inc. v. Lubrizol Corp.,
64 F.3d 1553 (Fed. Cir. 1995)..... 12

Exxon Research and Eng'g Co. v. U.S.,
265 F.3d 1371 (Fed. Cir. 2001)..... 5, 10

Gentry Gallery, Inc. v. Berkline Corp.,
134 F.3d 1473 (Fed. Cir. 1998)..... 7

Graham v. John Deere Co. of Kansas City,
383 U.S. 1 (1966) 15

Halliburton Energy Services, Inc. v. M-I LLC,
514 F.3d 1244 (Fed. Cir. 2008)..... 10

In re Hyatt,
708 F.2d 712 (Fed. Cir. 1983)..... 5

Linear Tech. Corp. v. Int'l Trade Comm'n,
566 F.3d 1049 (Fed. Cir. 2009) 15

Markman v. Westview Instruments, Inc.,
517 U.S. 370 (1996) ..... passim

Permutit Co. v. Graver Corp.,
284 U.S. 52 (1931) 8

Praxair, Inc. v. ATMI, Inc.,
543 F.3d 1306 (Fed. Cir. 2008) 9

Purdue Pharm. L.P. v. Faulding, Inc.,
230 F.3d 1320 (Fed. Cir. 2000) 7

TecSec, Inc. v. Int'l Bus. Mach. Corp.,
731 F.3d 1336 (Fed. Cir. 2013) 10, 13

Tessera, Inc. v. Int'l Trade Comm'n,
646 F.3d 1357 (Fed. Cir. 2011) 15

TRW Inc. v. Andrews,
534 U.S. 19 (2001) 8

Ultimax Cement Mfg. v. CTS Cement Mfg.,
587 F.3d 1339 (Fed. Cir. 2009) 6

United Carbon Co. v. Binney & Smith Co.,
317 U.S. 228 (1942) 9

Vas-Cath Inc. v. Mahurkar,
935 F.2d 1555 (Fed. Cir. 1991) 7

STATUTES AND REGULATIONS

35 U.S.C. § 102 ..... 3, 5

35 U.S.C. § 103 3

35 U.S.C. § 112 ..... passim

Leahy-Smith America Invents Act, Pub. L. No. 112-29, §4(c), 125 Stat. 284 (2011) 9

Manual of Patent Examining Procedure § 2173.04 5

Manual of Patent Examining Procedure § 2173.02(I) 6

OTHER AUTHORITIES

David L. Schwartz, *Pre-Markman Reversal Rates*, 43 Loy. L.A. L. Rev. 1073 (2010) 13

Kristen Osenga, *Linguistics and Patent Claim Construction*, 38 Rutgers L. J. 61 (2006) 12

Robert A. Faber, *Mechanics of Patent Claim Drafting* (6th ed. 2008) 12

Woodward, *Definiteness and Particularity in Patent Claims*, 46 Mich. L.Rev. 755 (1948) 12

INTEREST OF THE *AMICI CURIAE*[1]

Amici curiae are Nokia Corporation and Nokia USA Inc. (collectively, "Nokia"). Nokia is a global leader in the development and manufacture of handheld devices and mobile communications technologies. Nokia has invested over $50 billion to date in research and development in support of these activities. As a result of these extensive efforts, Nokia has contributed to the development and success of a number of commercially viable mobile technologies and standards, evidenced by the thousands of globally granted patents awarded to Nokia. Through this substantial commitment to technological progress, Nokia has amassed a patent portfolio comprising over 10,000 patent families.

Nokia is involved in numerous U.S. patent lawsuits, both as a plaintiff and defendant. Nokia thus understands the importance of applying balanced legal principles that protect the innovations of those who have invested significant resources, while at the same time recognizing that there is an

---

[1] Pursuant to Supreme Court Rule 37.6, counsel for *amici curiae* state that no counsel for a party authored this brief in whole or in part, or made a monetary contribution intended to fund the preparation or submission of this brief, and no other person other than *amici curiae*, its members, or its counsel made such a contribution. Pursuant to Supreme Court Rule 37.3, counsel for *amici curiae* represent that all parties have consented to the filing of this brief. Both Petitioner and Respondent have filed with the Clerk blanket consents for the filing of *amicus curiae* briefs in support of either party.

interest in drafting claims that are understandable to a person having ordinary skill in the art.

Nokia's interest in this case is to advocate for patent laws that achieve the proper balance between the protection of a patentee's innovations and the public notice function regarding the scope of coverage sought by the patentee. Nokia, as a world leader in wireless innovation and as a target for patent infringement lawsuits, supports Respondent's position that the indefiniteness standard currently applied by the Federal Circuit reaches the proper balance and provides the requisite stability to incentivize further investments. Nokia takes no position on any other substantive issues in this matter.

SUMMARY OF ARGUMENT

Petitioner requests that this Court overturn decades of jurisprudence holding that a claim must be insolubly ambiguous before it can be rendered indefinite. In support of its position, Petitioner argues that the current standard applied by the Federal Circuit makes it too difficult for those accused of patent infringement to invalidate claims under § 112(b), and as a result, patentees are being issued broad claims and seeking protection that extends beyond their original disclosures.

These arguments are without support because Congress has already provided accused infringers with other mechanisms to address the precise harms

complained of. Specifically, §§ 102 and 103 address Petitioner's overbreadth issues, while § 112(a)'s written description requirement prevents patentees from overreaching beyond their original patent disclosure. For these reasons, the indefiniteness requirement of § 112(b) need not be re-interpreted.

Petitioner also fails to address adequately the role of claim construction under its broad re-interpretation of § 112. The difficulties of describing an applicant's invention with a collection of words inevitably will result in reasonable disputes as to the claim's meaning. Indeed, this Court's establishment of centuries-old claim construction jurisprudence acknowledges that such reasonable disputes will occur. Adopting Petitioner's standard could render indefinite every claim whose meaning could be reasonably disputed and effectively overturns hundreds of years of claim construction precedent of this Court. In addition, such an interpretation would lead to widespread uncertainty regarding every patent subject to a previous claim construction ruling, as well as millions of patents currently in force. For entities like *amici*, this will act as a disincentive for investments in the research and development of innovative devices and standards in the telecommunications industry.

ARGUMENT

I. CHANGING THE STANDARD FOR INDEFINITENESS IS NOT THE APPROPRIATE VEHICLE FOR ADDRESSING THE HARMS FOR WHICH PETITIONER COMPLAINS

Under this country's patent regime, the definiteness requirement plays an important role in assuring that claims are drafted in a comprehensible manner, but it is not one of the tools Congress has provided to remedy issues such as claim breadth or overreaching by patent holders. Those concerns are more appropriately addressed through separate provisions of Title 35, and re-interpreting § 112(b) in the manner Petitioner suggests is therefore both unnecessary and inconsistent with settled principles of statutory construction. Moreover, § 112(b), as currently applied, serves its intended purpose of removing claims which fail to have any meaning.

A. The Current Patent Laws Contain Adequate Avenues To Provide The Relief Petitioner Seeks

Broad, unsupported patent claims may be problematic for companies facing a threat of litigation, but mounting an indefiniteness challenge is not necessarily the only, or even proper, approach to defend against them. Instead, the existing patent laws already provide other appropriate avenues to address these types of claims. In particular, overly

broad claims are better resolved through validity challenges based on the prior art, while claims extending beyond the scope of the patent disclosure may be challenged on the grounds that they lack sufficient written description or enabling disclosure. *See, e.g.*, *In re Hyatt*, 708 F.2d 712, 715 (Fed. Cir. 1983) (explaining differences between patentability of broad claims under 35 U.S.C. §§ 102 and 112; Manual of Patent Examining Procedure § 2173.04 (suggesting that broad claims may be appropriately rejected as lacking a sufficient written description or an enabling disclosure, or alternatively rejected based on prior art). Because Congress has already defined tools for addressing overbreadth, there is no need to modify the distinct indefiniteness standard to achieve the same ends. *See Datamize, LLC v. Plumtree Software, Inc.*, 417 F.3d 1342, 1347 (Fed. Cir. 2005) ("The definiteness requirement, however, does not compel absolute clarity. Only claims 'not amenable to construction' or 'insolubly ambiguous' are indefinite.") (internal citations omitted); *Exxon Research and Eng'g Co. v. U.S.*, 265 F.3d 1371, 1375 (Fed. Cir. 2001) ("We engage in claim construction every day, and cases frequently present close questions of claim construction on which expert witnesses, trial courts, and even the judges of this court may disagree.").

1. Claim Breadth May Be Better Resolved Through Prior Art Challenges

Petitioner's first suggestion that a patent claim's broad scope is synonymous with indefiniteness lacks merit. Breadth is not to be confused with indefiniteness. *Ultimax Cement Mfg. v. CTS Cement Mfg.*, 587 F.3d 1339, 1352 (Fed. Cir. 2009) ("Merely claiming broadly does not render a claim insolubly ambiguous, nor does it prevent the public from understanding the scope of the patent."); *see also* Manual of Patent Examining Procedure § 2173.02(I) ("Examiners, however, are cautioned against confusing claim breadth with claim indefiniteness. A broad claim is not indefinite merely because it encompasses a wide scope of subject matter provided the scope is clearly defined."); *id.* at § 2173.04 ("Breadth is not indefiniteness.").

For example, a claim reciting a broad range of values (*e.g.*, a range for a percentage of a composition by volume) should not be rendered indefinite simply because the precise value is not specified. In such a scenario, a more appropriate approach, and one provided by the patent laws, would be for an alleged infringer to come forward with prior art that either anticipates or renders obvious the broad range as claimed. The same avenue is available even where the claims recite no range of values, but the patentee nevertheless seeks broad patent coverage encompassing the prior art.

2. Overreaching On Claim Scope May Be Challenged As Lacking Written Description Support

Petitioner next asserts that any purported ambiguity in claim language has led to patentees overreaching for protection beyond what is suggested by the patent specification. The definiteness requirement of § 112(b), however, is not aimed at tackling issues of overreaching. Instead, the written description requirement codified at § 112(a) specifically addresses this concern, irrespective of whether the claim contains an ambiguity. *Gentry Gallery, Inc. v. Berkline Corp.*, 134 F.3d 1473, 1479 (Fed. Cir. 1998) (to fulfill the written description requirement, "the patent specification 'must clearly allow persons of ordinary skill in the art to recognize that [the inventor] invented what is claimed.'") (citations omitted).

Where a patentee is unable to show that he or she had possession of the claimed invention at the time of the application's filing, the proper result, therefore, is not to render the claim indefinite, but instead find that the claim is invalid for lack of written description. *Vas-Cath Inc. v. Mahurkar*, 935 F.2d 1555, 1561 (Fed. Cir. 1991) (an "[a]dequate description of the invention guards against the inventor's overreaching by insisting that he recount his invention in such detail that his future claims can be determined to be encompassed within his original creation") (internal quotations omitted); *Purdue Pharm. L.P. v. Faulding, Inc.*, 230 F.3d 1320,

1326-27 (Fed. Cir. 2000) ("[O]ne cannot disclose a forest in the original application, and then later pick a tree out of the forest and say here is my invention.").

If the Court were to nevertheless agree with Petitioner and adopt a new interpretation of the § 112(b) definiteness requirement specifically targeting a patentees' overreaching, this would render the distinct written description requirement of § 112(a) redundant, counter to well-settled principles of statutory construction. *TRW Inc. v. Andrews*, 534 U.S. 19, 31 (2001) ("It is 'a cardinal principle of statutory construction' that 'a statute ought, upon the whole, to be so construed that, if it can be prevented, no clause, sentence, or word shall be superfluous, void, or insignificant.'") (quoting *Duncan v. Walker*, 533 U.S. 167, 174 (2001)); *see also Permutit Co. v. Graver Corp.*, 284 U.S. 52, 57-58 (1931) (finding that patent lacks sufficient written description where it failed to describe a claimed embodiment, and separately finding claim invalid for failure to "particularly to point out and distinctly claim . . . 'the part, improvement, or combination which he claims as his invention.'").

The definiteness requirement of § 112 has the distinct purpose of preventing incomprehensible claims. It was not meant to replace, gut, or blur the other portions of Title 35 that address related, but separate, issues. Petitioner's new interpretation therefore cannot be correct.

Moreover, even when § 112 was recently amended by the America Invents Act, Congress kept the separate written description and definiteness requirements largely intact,[2] strongly suggesting that it intended that these two doctrines serve distinct purposes under the patent laws. *Compare* 35 U.S.C. § 112 (2011) *with* 35 U.S.C. § 112 (2014). Congress was also well aware of the current Federal Circuit standard when it retained the existing language regarding definiteness, suggesting that it did not intend to alter this standard.

B. The Federal Circuit's Application of § 112 Does Not Make It Impossible To Render Claims Indefinite

Much of Petitioner's argument rests on the incorrect assumption that proving indefiniteness under existing precedent is an insurmountable task. Not so. This Court and the Federal Circuit properly acknowledge that the role of § 112(b) is not a catch-all invalidity defense; rather, § 112(b)'s reach is limited to situations where a claim is nonsensical or incomprehensible. *See, e.g.*, *United Carbon Co. v. Binney & Smith Co.*, 317 U.S. 228, 237 (1942) (recognizing that indefiniteness is a defense distinct from other types of invalidity); *Praxair, Inc. v. ATMI, Inc.*, 543 F.3d 1306, 1319 (Fed. Cir. 2008) ("A claim will be found indefinite only if it "is insolubly

---

[2] The America Invents Act amended § 112(a) and (b) to add paragraph letters and a reference to joint inventors. Leahy-Smith America Invents Act, Pub. L. No. 112-29, §4(c), 125 Stat. 284 (2011).

ambiguous, and no narrowing construction can properly be adopted . . . .") (citing *Exxon Research and Eng'g Co.*, 265 F.3d at 1375).

Interpreting the definiteness requirement any differently opens the door for an alleged infringer to seek invalidity of a patent claim simply by raising a reasonable alternative interpretation of the claim. Indeed, most skilled patent litigators would be able to accomplish this task with relatively little effort. Instead, the correct approach, and the one advanced by this Court and the Federal Circuit, is to engage first in construction of the claim to ascertain its meaning. *Markman v. Westview Instruments, Inc.*, 517 U.S. 370, 371 (1996) ("As the former patent practitioner, Justice Curtis, explained, *the first issue* in a patent case, construing the patent, is a question of law, to be determined by the court.") (emphasis added); *TecSec, Inc. v. Int'l Bus. Mach. Corp.*, 731 F.3d 1336, 1351 (Fed. Cir. 2013) (stating that the first step in an infringement analysis is the construction of the patent claim).

In the event one of ordinary skill is unable to ascribe any meaning to a claim, that claim fails to meet the statutory requirements of § 112(b). The Federal Circuit has consistently applied this rule, and indeed continues to apply this standard in rendering claims indefinite. *See, e.g., Ergo Licensing, LLC v. CareFusion 303, Inc.*, 673 F.3d 1361 (Fed. Cir. 2012); *Halliburton Energy Services, Inc. v. M-I LLC*, 514 F.3d 1244 (Fed. Cir. 2008).

II. PETITIONER FAILS TO EXPLAIN THE ROLE OF CLAIM CONSTRUCTION UNDER ITS NEW STANDARD

Petitioner's newly created standard for indefiniteness would potentially render indefinite every single claim whose meaning was in dispute, effectively destroying the well-settled role of claim construction in patent disputes. Such a position is contrary to the rulings of this Court, and cannot be correct. Additionally, for *amici*, this new interpretation may add uncertainty to its extensive patent portfolio, resulting in a disincentive to invest further resources in the industry of which it is an active participant.

A. Petitioner's Approach Contradicts Claim Construction's Fundamental Role In Resolving Reasonable Disputes Over Claim Meaning

The claim construction process exists because the meanings of patent terms are regularly subject to reasonable dispute. Indeed, the mere fact that this Court has stressed the importance of claim construction for centuries is a strong indication that reasonable disputes as to the meaning of claim terms are inevitable. *See Markman*, 517 U.S. at 390 (discussing importance of claim construction); *see also id.* 377-383 (providing history of claim construction dating back to 1850).

The necessity of claim construction stems from the innate difficulty in describing an applicant's invention, often comprising complex technologies, in terms on which every skilled artisan in the field can agree. *See Markman*, 517 U.S. at 388 ("Patent construction in particular 'is a special occupation, requiring, like all others, special training and practice.'"). The difficulty in drafting claims is no secret to the patent community. *See generally, e.g.*, Robert A. Faber, *Mechanics of Patent Claim Drafting* (6th ed. 2008). This Court and the Federal Circuit both recognize that claim drafting is an art, and as a result, properly hold that penalizing the patentee for claim drafting that is "less than ideal" is inappropriate. *Markman*, 517 U.S. at 388; *see also id.* ("Claims of patents have become highly technical in many respects as the result of special doctrines relating to the proper form and scope of claims that have been developed by the courts and the Patent Office") (quoting Woodward, *Definiteness and Particularity in Patent Claims*, 46 Mich. L.Rev. 755, 765 (1948)); *Exxon Chem. Patents, Inc. v. Lubrizol Corp.*, 64 F.3d 1553, 1563 (Fed. Cir. 1995) (Plager, J. concurring) ("Claim drafting is itself an art, an art on which the entire patent system today depends.").

Because of difficulties such as these, claim construction becomes a necessary task, especially since any two patent drafters are unlikely to independently describe the same invention using precisely the identical choice and arrangement of words. *See, e.g.*, Kristen Osenga, *Linguistics and Patent Claim Construction*, 38 Rutgers L. J. 61, 66-

67 (2006) (explaining difficulty in drafting patent claims); *see also Autogiro Co. of America v. U.S.*, 384 F.2d 391, 396-97 (Ct. Cl. 1967) ("The inability of words to achieve precision is none the less extant with patent claims. . . . This conversion of machine to words allows for unintended idea gaps which cannot be satisfactorily filled. Often the invention is novel and words do not exist to describe it."). As a result, nearly every patent dispute requires at least some term to be interpreted by a court. *See, e.g.*, *Markman*, 517 U.S. at 371 (explaining that the "the first issue in a patent case" is construing the patent); *TecSec, Inc.*, 731 F.3d at 1351 (determination of infringement first requires court to construe the claims).

The new interpretation of § 112(b) Petitioner asks the Court to adopt effectively guts this entire centuries-old doctrine, as every claim that contained a term whose meaning was in dispute–and would otherwise be subject to claim construction under existing precedent–would by definition be indefinite. Even a common scenario where a dispute exists whether the specification or prosecution history contains a disavowal of claim scope would result in the claim term being ambiguous beyond repair.

Moreover, in recent years, the claim construction reversal rate at the Federal Circuit has been as high as 37.5%. *See* David L. Schwartz, *Pre-Markman Reversal Rates*, 43 Loy. L.A. L. Rev. 1073, 1095 (2010) (discussing claim construction reversal rate for 2008). At a minimum, Petitioner's new

interpretation suggests that every claim construed in those cases would be retroactively indefinite. Such a broad reading of § 112 overturning hundreds of years of jurisprudence and countless claim constructions rendered by the lower courts cannot possibly be correct. *See, e.g.*, *Markman*, 517 U.S. at 377-383 (providing history of claim construction dating back to 1850). Nor is such a penalizing view of § 112(b) fair to patent holders who have relied upon this country's longstanding precedent that reasonable claim ambiguities are resolved through claim construction, not through punitive consequences of invalidity.

Adopting a standard requiring a patentee to define his invention in such precise terms that any two skilled artisans anywhere in the world would agree on, even as technology and terminology evolve, is an unrealistic burden and contrary to the teachings of this Court.

B. Petitioner Offers Little Clarification When Claim Construction Would, Or Would Not, Be Appropriate Under Its Standard

Although Petitioner argues that claim construction doctrine would still have a role under patent law, it fails to offer any clarity regarding what that role would be. The only purpose Petitioner provides for claim construction is solely to rephrase claim terms so that lay jurors can more easily understand them. While this may indeed be one

aspect of claim construction under our current system, it is far from the only function. Claim construction is performed even where bench trials take place in district court. Moreover, Administrative Law Judges at the International Trade Commission, a venue where juries are nonexistent, routinely engage in claim construction. *E.g.*, *Tessera, Inc. v. Int'l Trade Comm'n*, 646 F.3d 1357, 1364 (Fed. Cir. 2011); *Linear Tech. Corp. v. Int'l Trade Comm'n*, 566 F.3d 1049, 1054-60 (Fed. Cir. 2009). The suggestion that claim construction is limited to simplifying the claim terms for jurors is therefore without support. *See, e.g.*, *Markman*, 517 U.S. at 390 (explaining that one purpose of claim construction is to ascertain the limits of the claimed invention).

Petitioner offers no further guidance on what role, if any, claim construction would have under its new interpretation of § 112. This is not surprising because, as explained earlier, any reasonable dispute regarding a claim's meaning would lead to indefiniteness, rendering construction unnecessary.

The effect of such a drastic change could lead to widespread uncertainty regarding both the scope of coverage with respect to issued patents and future patent litigation procedure. For entities like *amici*, this sort of stability is largely responsible for the investment in research and development leading to the wireless devices and technologies widely used around the world. As a policy matter, therefore, Petitioner's suggested withdrawal of decades of precedent should be rejected. *See, e.g.*, *Graham v.*

John Deere Co. of Kansas City, 383 U.S. 1, 18 (1966) (recognizing the need for "uniformity and definiteness" in the obviousness context).

CONCLUSION

For the reasons set forth above, the Court should reject Petitioner's request to alter the longstanding rule that a claim be insolubly ambiguous before it is deemed indefinite. Because the precedent of this Court and the Federal Circuit regarding the indefiniteness standard strikes the appropriate balance necessary for parties like *amici* to foster innovation, Petitioner's new interpretation should be rejected.

Respectfully submitted,

RONALD ANTUSH
TODD LEITSTEIN
NOKIA CORPORATION
AND NOKIA USA INC.
6021 Connection Drive
Irving, Texas 75039

PATRICK J. FLINN
Counsel of Record
JOHN D. HAYNES
RISHI S. SUTHAR
ALSTON & BIRD LLP
1201 W. Peachtree St.
Atlanta, GA 30309
Tel. (404) 881-7000
patrick.flinn@alston.com

Counsel for Amici Curiae

April 2, 2014

AMICUS CURIAE BRIEF

RECORD AND BRIEFS

No. 13-369

Supreme Court, U.S.
FILED
MAR - 3 2014
OFFICE OF THE CLERK

IN THE

Supreme Court of the United States

NAUTILUS, INC.

Petitioner,

v.

BIOSIG INSTRUMENTS, INC.,

Respondent.

ON WRIT OF CERTIORARI TO THE UNITED STATES COURT OF APPEALS FOR THE FEDERAL CIRCUIT

BRIEF FOR NOVA CHEMICALS INC., AETNA INC., MICRON TECHNOLOGY, INC., GENERAL MOTORS LLC, EMC CORPORATION, INTEL CORPORATION, AND THERMO FISHER SCIENTIFIC INC. AS AMICI CURIAE SUPPORTING PETITIONER

DONALD R. DUNNER*
DARREL C. KARL
MARK J. FELDSTEIN
RONALD A. BLEEKER
FINNEGAN, HENDERSON, FARABOW, GARRETT & DUNNER, LLP
901 New York Ave., NW
Washington, DC 20001

SETH P. WAXMAN
Counsel of Record
THOMAS G. SAUNDERS
CHRISTINA MANFREDI MCKINLEY
WILMER CUTLER PICKERING HALE AND DORR LLP
1875 Pennsylvania Ave., NW
Washington, DC 20006
(202) 663-6000
seth.waxman@wilmerhale.com

* *Counsel for NOVA Chemicals Inc.*

ADDITIONAL COUNSEL LISTED ON INSIDE COVER

Library of Congress
Law Library

H. WOODRUFF TURNER*
K&L GATES LLP
210 Sixth Avenue
Pittsburgh, PA 15222

WILLIAM C. MITCHELL*
GARY F. MATZ
NOVA CHEMICALS INC.
1555 Coraopolis Heights Rd.
Pittsburgh, PA 15108

ARI SAVITZKY
WILMER CUTLER PICKERING
HALE AND DORR LLP
7 World Trade Center
250 Greenwich Street
New York, NY 10007

* *Counsel for NOVA Chemicals Inc.*

TABLE OF CONTENTS

Page

TABLE OF AUTHORITIES iii

INTEREST OF AMICI CURIAE 1

INTRODUCTION AND SUMMARY 3

ARGUMENT 6

I. THE PATENT ACT REQUIRES PARTICULARITY IN PATENT CLAIMING 6

II. THE FEDERAL CIRCUIT'S STANDARD DEVIATES FROM THE STATUTORY REQUIREMENTS AND THIS COURT'S PRECEDENT 10

III. THE FEDERAL CIRCUIT'S STANDARD STIFLES BUSINESS AND INNOVATION 15

A. The Federal Circuit's Standard Encourages Ambiguity In Claim Drafting 15

B. The Uncertainty Created By The Federal Circuit's Standard Comes At Great Expense To Businesses And To The Public 16

TABLE OF CONTENTS—Continued

Page

1. The Federal Circuit's acceptance of vague and ambiguous claims reduces total investment in innovation 17

2. The Federal Circuit's acceptance of ambiguous claims taxes innovators with massive litigation costs 19

IV. THIS COURT SHOULD REQUIRE THAT PATENTS PROVIDE CLEAR NOTICE OF CLAIM SCOPE 20

CONCLUSION 26

TABLE OF AUTHORITIES

CASES

Page(s)

Ariad Pharmaceuticals, Inc. v. *Eli Lilly & Co.*, 598 F.3d 1336 (Fed. Cir. 2010) 23

Blonder-Tongue Laboratories, Inc. v. *University of Illinois Foundation*, 402 U.S. 313 (1971) 8

Bonito Boats, Inc. v. *Thunder Craft Boats, Inc.*, 489 U.S. 141 (1989) 7, 19

Chiuminatta Concrete Concepts, Inc. v. *Cardinal Indus., Inc.*, 145 F.3d 1303 (Fed. Cir. 1998) 12

Datamize LLC v. *Plumtree Software, Inc.*, 417 F.3d 1342 (Fed. Cir. 2005) 24

Dow Chemical Co. v. *NOVA Chemicals Corp. (Canada)*, 629 F. Supp. 2d 397 (D. Del. 2009) 13

Dow Chemical Co. v. *NOVA Chemicals Corp.*, 458 F. App'x 910 (Fed. Cir. 2012) 12, 25

Enzo Biochem, Inc., v. *Applera Corp.*, 599 F.3d 1325 (Fed. Cir. 2010) 13, 14

Eon-Net LP v. *Flagstar Bancorp*, 653 F.3d 1314 (Fed. Cir. 2011) 16

Exxon Research & Engineering Co. v. *United States*, 265 F.3d 1371 (Fed. Cir. 2001) 11, 12

Festo Corp. v. *Shoketsu Kinzoku Kogyo Kabushiki Co.*, 535 U.S. 722 (2002) 17

Fisher-Price, Inc. v. *Graco Children's Products, Inc.*, 154 F. App'x 903 (Fed. Cir. 2005) 14

TABLE OF AUTHORITIES—Continued

Page(s)

Hearing Components, Inc. v. *Shure Inc.*, 600 F.3d 1357 (Fed. Cir. 2010) 11, 25

Keystone Bridge Co. v. *Phoenix Iron Co.*, 95 U.S. 274 (1877) 10

Litton Systems, Inc. v. *Honeywell, Inc.*, 87 F.3d 1559 (Fed. Cir. 1996) 9

LNP Engineering Plastics, Inc. v. *Miller Waste Mills, Inc.*, 275 F.3d 1347 (Fed. Cir. 2001) 11

Markman v. *Westview Instruments, Inc.*, 517 U.S. 370 (1996) 7, 10, 17, 22

McClain v. *Ortmayer*, 141 U.S. 419 (1891) 17, 21

Medtronic, Inc. v. *Mirowski Family Ventures, LLC*, 134 S. Ct. 843 (2014) 8

Merrill v. *Yeomans*, 94 U.S. 568 (1877) 7, 21

NOVA Chemicals Corp. v. *Dow Chemical Co.*, 133 S. Ct. 544 (2012) 1

Oakley, Inc. v. *Sunglass Hut International*, 316 F.3d 1331 (Fed. Cir. 2003) 17

Permutit Co. v. *Graver Corp.*, 284 U.S. 52 (1931) 21

Pfaff v. *Wells Electronics, Inc.*, 525 U.S. 55 (1998) 19

Phillips v. *AWH Corp.*, 415 F.3d 1303 (Fed. Cir. 2005) 12

TABLE OF AUTHORITIES—Continued

Page(s)

Precision Instrument Manufacturing Co. v. *Automotive Maintenance Machinery Co.*, 324 U.S. 806 (1945) 8

Southwall Technologies, Inc. v. *Cardinal IG Co.*, 54 F.3d 1570 (Fed. Cir. 1995) 23

State Industries, Inc. v. *A.O. Smith Corp.*, 751 F.2d 1226 (Fed. Cir. 1985) 9

United Carbon Co. v. *Binney & Smith Co.*, 317 U.S. 228 (1942) 8, 17, 21

Universal Oil Products Co. v. *Globe Oil & Refining Co.*, 322 U.S. 471 (1944) 8, 21, 22

STATUTES AND LEGISLATION

35 U.S.C. § 112 ..... *passim*

Act of July 4, 1836, 5 Stat. 117 6

Act of July 8, 1870, 16 Stat. 198 6

Leahy-Smith America Invents Act, Pub. L. No. 112-29, 125 Stat. 284 (2011) 6

OTHER AUTHORITIES

American Intellectual Property Law Association, *Report of the Economic Survey 2011* (July 2011) 20

Bessen, James & Michael J. Meurer, *Patent Failure: How Judges, Bureaucrats, and Lawyers Put Innovators At Risk* (2008) 18

Executive Office of the President, *Patent Assertion and U.S. Innovation* (June 2013) 20

TABLE OF AUTHORITIES—Continued

Page(s)

FTC, *The Evolving IP Marketplace: Aligning Patent Notice and Remedies with Competition* (Mar. 2011) 18

Jaffe, Adam B. & Josh Lerner, *Innovation and Its Discontents* (2004) 18

Landes, William M. & Richard A. Posner, *The Economic Structure of Intellectual Property Law* (2003) 19

Merton, Robert K., *On the Shoulders of Giants: A Shandean Postscript* (1965) 9

Mullally, Kelly Casey, *Legal (Un)certainty, Legal Process, and Patent Law*, 43 Loy. L.A. L. Rev. 1109 (2010) 15

Nard, Craig Allen, *Certainty, Fence Building, and the Useful Arts*, 74 Ind. L.J. 759 (1999) 9

Plager, S. Jay, *Challenges for Intellectual Property Law in the Twenty-First Century: Indeterminacy and Other Problems*, 2001 U. Ill. L. Rev. 69 (2001) 16

Plager, S. Jay, *The Federal Circuit as an Institution: On Uncertainty and Policy Levers*, 43 Loy. L.A. L. Rev. 749 (2010) 15

Sichelman, Ted & Stuart J.H. Graham, *Patenting by Entrepreneurs: An Empirical Study*, 17 Mich. Telecomm. & Tech. L. Rev. 111 (2010) 18

Slusky, Ronald D., *Invention Analysis and Claiming: A Patent Lawyer's Guide* (2007) 16

TABLE OF AUTHORITIES—Continued

Page(s)

Thomas, John R., *Claim Re-Construction: The Doctrine of Equivalents in the Post-Markman Era*, 87 J. Pat. & Trademark Off. Soc'y 781 (2005) 12

INTEREST OF AMICI CURIAE[1]

Amici are a collection of large and small companies spanning a wide range of industries, including manufacturing, technology, insurance, and biotechnology. *Amici* both hold patents of their own and defend against infringement claims brought by others, and therefore have an interest in ensuring a balanced patent system.

This case presents an important question regarding the propriety of the Federal Circuit's test for ascertaining claim indefiniteness. Many *amici* have experienced firsthand through litigation the adverse consequences caused by the Federal Circuit's "insolubly ambiguous" or "amenable to construction" test. Other *amici* have been required to factor the uncertainties produced by the Federal Circuit's test into their business decisions. *Amici* thus have a unique perspective on the question presented and share a significant interest in ensuring that the Patent Act's definiteness requirement is applied in the fashion Congress intended.

NOVA Chemicals Inc. is a leading producer of plastics and chemicals designed for use in everyday products, such as food packaging, and a wide variety of industrial products. It previously petitioned this Court seeking review of the Federal Circuit's definiteness standard, *see NOVA Chemicals Corp.* v. *Dow Chemical*

---

[1] Pursuant to Supreme Court Rule 37.6, counsel for *amici* state that no counsel for a party authored this brief in whole or in part. No person other than *amici* or its counsel made a monetary contribution to this brief's preparation or submission. Pursuant to Supreme Court Rule 37.2, *amici* state that counsel of record for both petitioner and respondent were timely notified of the intent to file this brief. Both petitioner and respondent have filed letters granting blanket consent to the filing of amicus briefs.

Co., 133 S. Ct. 544 (2012), and has a strong interest in the adoption of a more balanced standard.

Aetna Inc. is one of the nation's leading health care benefits companies. Aetna offers a broad range of health insurance products and related services, including medical, pharmacy, dental, behavioral health, group life, and disability plans, as well as medical management capabilities and health care management services.

Micron Technology, Inc. is a leading, global, semiconductor company that designs, manufactures, and sells advanced, high performance, memory solutions. Backed by more than 35 years of technology leadership, Micron's memory solutions enable the world's most innovative computing, consumer, enterprise storage, networking, mobile, embedded, and automotive applications. Micron contributes billions of dollars in annual sales to the U.S. and world economy, annually invests hundreds of millions of dollars in research and development, and employs thirty thousand people both in the United States and overseas. Micron is a firm believer in a balanced patent system and holds over fifteen thousand United States patents.

General Motors LLC is part of General Motors Company, one of the world's leading automobile manufacturers. General Motors is focused on developing innovative technologies to shape the future of the automotive industry, and is among the leading recipients of U.S. patent grants.

EMC Corporation is a global leader in enabling businesses and service providers to transform their operations and deliver IT as a service. Fundamental to this transformation is cloud computing. Through innovative products and services, EMC accelerates the journey to cloud computing, helping IT departments to

store, manage, protect, and analyze their most valuable asset—information—in a more agile, trusted, and cost-efficient way. EMC and its majority owned federated businesses hold approximately 4,300 patents issued by the U.S. Patent and Trademark Office and employ over 60,000 people worldwide.

Intel Corporation is the world's leading semiconductor manufacturer and a major producer of computer, networking, and communications hardware and software. Intel's business depends on systems that incorporate a large number of components and perform a variety of functions. As a result, Intel must frequently defend against allegations of patent infringement. At the same time, Intel owns thousands of its own patents and has an interest in maintaining a balanced patent system.

Thermo Fisher Scientific Inc. is a leading developer and manufacturer of scientific instruments, reagents, equipment and consumables, software, and services for research, analysis, discovery, and diagnostics. It owns thousands of patents and has been patentee or defendant in numerous lawsuits, and has a strong interest in clarification of the indefiniteness standard from the point of view of both plaintiff and defendant.

INTRODUCTION AND SUMMARY

Section 112 of the Patent Act requires that patents particularly point out and distinctly claim the subject matter they cover. This requirement serves a critical notice function, informing the public of the scope of a patentee's exclusive rights and guiding the decisions of innovators and competitors. Notwithstanding the statutory mandate and this Court's precedent stressing the notice function, the Federal Circuit applies a lax defi-

niteness standard that is satisfied whenever a court is able to give *some* meaning to a vague or ambiguous claim—no matter how difficult the task, how reasonable the disagreement about the claim's meaning, or how far beyond the patent a person of ordinary skill in the art must look to try to understand the claim.

The Federal Circuit's diluted version of the definiteness requirement upsets the delicate balance the Patent Act strikes between rewarding innovation and encouraging competition. The consequences of that disruption are far from academic. The Federal Circuit's standard exacts a high toll on businesses which, without the degree of certainty the definiteness requirement of § 112 is supposed to provide, must either steer well clear of ambiguous claims, thereby effectively increasing the scope of those claims beyond their proper bounds, or else risk a suit for infringement. This in turn has severe economic consequences for the public, which is unable to benefit from competition and innovation that otherwise would occur.

Patent owners are in the best position to avoid ambiguous claims. But because the Federal Circuit's standard lets them shift the burden of ambiguous claims onto the public, they have insufficient incentive to ensure that their claims are clear and precise, particularly when weighed against the countervailing incentive to draft claims that are as broad and flexible as possible.

This Court should repudiate the Federal Circuit's standard and reaffirm that § 112 requires clear notice of claim scope. The determination whether any particular claim fails to provide clear notice is necessarily case-specific, but there are a number of common principles

and warning signs that indicate that a claim has not provided sufficient guidance.

First, claims must particularly describe what is claimed and point out the limitations of those claims, so that it is clear both what the claimed invention is and what it is not.

Second, a person of ordinary skill should be able to readily ascertain the meaning of a claim by looking at the claims and the specification. Unsupported assertions by an expert that claims are understandable should not be sufficient to defeat a definiteness challenge.

Third, when construing a claim requires undue effort, the correct construction is genuinely doubtful, or there is substantial and reasonable disagreement among persons of ordinary skill as to the claim's meaning, it indicates that the claims did not clearly communicate their scope to skilled artisans.

Fourth, when a patent uses vague terms with no established meaning in the art, courts should insist that the specification clarify the meaning of those terms.

Fifth, courts should be deeply suspicious of subjective terms in patent claims.

Sixth, when patents use terms of degree, the specification must supply a standard for measuring that degree.

Seventh, when claims refer to measurements or equations, it should be clear from the specification how the measurement should be taken and what units are being used.

These principles do not exhaust what it means to provide clear notice, but they would go a long way to-

ward achieving a more balanced application of § 112, ¶ 2, ensuring significant benefits to innovators and the public alike.

ARGUMENT

I. THE PATENT ACT REQUIRES PARTICULARITY IN PATENT CLAIMING

Section 112 of the Patent Act instructs applicants on the requirements they must fulfill to disclose and claim their inventions. 35 U.S.C. § 112 (entitled "Specification"). Section 112, ¶ 1 requires that the specification describe and enable the invention and the manner and process of making and using it. Section 112, ¶ 2 states that the specification must conclude with "one or more claims particularly pointing out and distinctly claiming the subject matter which the applicant regards as his invention." 35 U.S.C. § 112, ¶ 2.[2]

This latter provision is known as the "definiteness requirement." By its plain terms, this provision requires that inventions be claimed "particularly" and "distinctly." The word "particularly" indicates that a

---

[2] The Leahy-Smith America Invents Act ("AIA"), Pub. L. No. 112-29, § 4(c), 125 Stat. 284, 296 (2011), changed the word "applicant" to "inventor or a joint inventor" and redesignated 35 U.S.C. § 112 ¶ 2 as § 112(b). Those minor changes did not alter the requirement of "particularly pointing out and distinctly claiming the subject matter" covered by the patent, which dates back more than a century. *See* Act of July 8, 1870, ch. 230, § 26, 16 Stat. 198, 201 ("particularly point out and distinctly claim"); *see also* Act of July 4, 1836, ch. 357, § 6, 5 Stat. 117, 119 ("particularly specify and point out"). Section 112(b) applies only to patent applications filed on or after September 16, 2012. AIA § 4(e), 125 Stat. at 297. Because the patent-in-suit issued prior to that date, this brief refers to the pre-AIA version of § 112, but the analysis applies equally to § 112(b).

claim must be described with specificity, not with vague terms that could encompass several different possible scopes. The word "distinctly" similarly confirms the precision with which the claim language must differentiate the invention. Congress thus emphasized in § 112, ¶ 2 that a claim's boundaries must clearly and unambiguously distinguish what the patentee has claimed from what remains in the public domain.

The primary purpose of the definiteness requirement is to ensure that patents provide clear notice of the scope of their claims. Achieving that clarity benefits the public, competitors, courts, and patentees alike. The patent system embodies a "carefully crafted bargain" that encourages the creation and disclosure of new, useful, and nonobvious advances in technology in return for the exclusive right to practice the invention for a period of years. *Bonito Boats, Inc.* v. *Thunder Craft Boats, Inc.*, 489 U.S. 141, 150-151 (1989). As part of that bargain, "[t]he public should not be deprived of rights supposed to belong to it, without being clearly told what it is that limits these rights," and "nothing can be more just and fair, both to the patentee and to the public, than that the former should understand, and correctly describe, just what he has invented, and for what he claims a patent." *Merrill* v. *Yeomans*, 94 U.S. 568, 573-574 (1877). The patentee thus must not only describe and enable its invention, *see* § 112, ¶ 1, but also precisely define the limits of its claims, *see* § 112, ¶ 2. *See also Markman* v. *Westview Instruments, Inc.*, 517 U.S. 370, 373 (1996).

Requiring clarity in claim drafting provides a critical check against unwarranted expansion of the patent monopoly. As the Court observed earlier this Term, "the 'public' ... has a 'paramount interest in seeing that patent monopolies are ... kept within their legitimate

scope.' A patentee 'should not be ... allowed to exact royalties for the use of an idea ... that is beyond the scope of the patent monopoly granted.'" *Medtronic, Inc.* v. *Mirowski Family Ventures, LLC*, 134 S. Ct. 843, 851-852 (2014) (quoting *Precision Instrument Mfg. Co.* v. *Automotive Maint. Mach. Co.*, 324 U.S. 806, 816 (1945); *Blonder-Tongue Labs., Inc.* v. *University of Ill. Found.*, 402 U.S. 313, 349-350 (1971)) (second, third, and fourth alterations in original). Claims are "required to be specific for the very purpose of protecting the public against extension of the scope of the patent." *Universal Oil Prods. Co.* v. *Globe Oil & Ref. Co.*, 322 U.S. 471, 484-485 (1944).

Clear notice of claim scope is also vital to competitors who must make investments and strategic business decisions based on an understanding of what patents prohibit and permit. *See United Carbon Co.* v. *Binney & Smith Co.*, 317 U.S. 228, 232 (1942) ("The inventor must inform the public during the life of the patent of the limits of the monopoly asserted, so that it may be known which features may be safely used or manufactured without a license and which may not." (internal quotation marks omitted)).

This Court has long recognized the serious problems that are created when ambiguous patent claims give rise to a "zone of uncertainty which enterprise and experimentation may enter only at the risk of infringement claims." *United Carbon*, 317 U.S. at 236. This uncertainty "discourage[s] invention only a little less than unequivocal foreclosure of the field." *Id.* Judge Bryson has likewise observed:

> Patent counselors should be able to advise their clients, with some confidence, whether to proceed with a product or process of a particular

> kind. The consequences of advice that turns out to be incorrect can be devastating, and the costs of uncertainty—unjustified caution or the devotion of vast resources to the sterile enterprise of litigation—can be similarly destructive.

Litton Sys., Inc. v. *Honeywell, Inc.*, 87 F.3d 1559, 1580 (Fed. Cir. 1996) (Bryson, J., concurring in part and dissenting in part), *vacated*, *Honeywell, Inc. v. Litton Sys., Inc.*, 520 U.S. 1111 (1997).

Uncertainty not only erodes competition but also interferes with the incentive to design around a patent. "One of the benefits of a patent system is its so-called 'negative incentive' to 'design around' a competitor's products, even when they are patented, thus bringing a steady flow of innovations to the marketplace." *State Indus., Inc.* v. *A.O. Smith Corp.*, 751 F.2d 1226, 1236 (Fed. Cir. 1985). But "[a] competitor, whether designing around or improving upon the claimed invention, must have confidence in where exactly the patentee built his fence so that he can proceed accordingly ...." Nard, *Certainty, Fence Building, and the Useful Arts*, 74 Ind. L.J. 759, 775 (1999). Otherwise, "fearful of standing upon shoulders greased by uncertainty," competitors may "channel their inventive energies to an unrelated technological field" *Id.* at 768.[3]

Clear claims also benefit patentees in the long run. Although ambiguous claims can be manipulated for short-term gain, long-term investment depends on certainty and stability. Until the scope of ambiguous pa-

---

[3] In an often quoted statement about innovation, Isaac Newton reportedly said, "If I have seen farther, it is by standing on the shoulders of giants." *See* Merton, *On the Shoulders of Giants: A Shandean Postscript* (1965) (tracing the origins of Newton's statement).

tent claims is clarified in litigation, the same uncertainty that causes competitors to steer clear of ambiguous claims also erodes the confidence needed for the type of investment that will benefit both the patentee and the public beyond the private gains to be had in litigation.

In addition to its important notice function, the definiteness requirement places the burden of drafting clear claims on the party in the best position to avoid ambiguity: the patent applicant. It is the applicant who is best situated to understand and describe the scope of the invention. *See Markman*, 517 U.S. at 573-574. It is only fair to place the obligations of defining the claim on the applicant, as well as any attendant consequences of indefinite claiming.

Finally, by placing the burden of clarity on the patent applicant, courts are relieved "from the duty of ascertaining the exact invention of the patentee by inference and conjecture, derived from a laborious examination of previous inventions, and a comparison thereof with that claimed by him." *Keystone Bridge Co.* v. *Phoenix Iron Co.*, 95 U.S. 274, 278 (1877). The definiteness requirement thus conserves judicial resources, both by relieving courts of the burden of trying to construe the most ambiguous claims and by ensuring that parties need not wait for a judicial decision to know what has been claimed and what remains open to innovation.

II. The Federal Circuit's Standard Deviates From The Statutory Requirements And This Court's Precedent

Despite this Court's emphasis on clarity in claim drafting and notice to skilled artisans, the Federal Circuit in recent years has embraced a test that runs afoul of those requirements. The Federal Circuit applies

what has become known as the "insolubly ambiguous" or "amenable-to-construction" standard. *Exxon Research & Eng'g Co.* v. *United States*, 265 F.3d 1371, 1375 (Fed. Cir. 2001). Under this standard and various related formulations, the Federal Circuit asks only "that the claims be amenable to construction, however difficult that task may be." *Id.* Only "[i]f a claim is insolubly ambiguous, and *no narrowing construction* can properly be adopted," will the Federal Circuit hold the claims indefinite. *Id.* (emphasis added). The Federal Circuit's test for indefiniteness is thus met whenever "the meaning of the claim is discernible" to a court, "even though the task may be formidable and the conclusion may be one over which reasonable people will disagree." *Id.*; *see also Hearing Components, Inc.* v. *Shure Inc.*, 600 F.3d 1357, 1366 (Fed. Cir. 2010) (claim is definite so long as it "can be given any reasonable meaning").

In practice, the Federal Circuit's standard makes it extremely difficult to invalidate indefinite claims. As one scholar has noted,

> The Federal Circuit's permissive posture towards the definiteness standard further undermines the public notice of patent claims .... [I]n recent years the Federal Circuit upheld a claim calling for fibers that are "substantially completely wetted" over a definiteness challenge.[4] A claim directed towards treating a catalyst for a "period sufficient to increase substantially the initial catalyst activity" was like-

---

[4] *LNP Eng'g Plastics, Inc.* v. *Miller Waste Mills, Inc.*, 275 F.3d 1347 (Fed. Cir. 2001).

> wise confirmed.[5] ... [Another] example was a claim reciting concrete "hardened sufficiently to allow cutting by a ... saw, while still producing an acceptable finish," which also withstood scrutiny for indefiniteness.[6]

Thomas, *Claim Re-Construction: The Doctrine of Equivalents in the Post-Markman Era*, 87 J. Pat. & Trademark Off. Soc'y 781, 792 (2005).

Other examples abound. In *Dow Chemical Co.* v. *NOVA Chemicals Corp.*, 458 F. App'x 910, 918 (Fed. Cir. 2012), the issue of infringement turned on whether a coefficient calculated based on the slope of a particular curve was "greater than or equal to 1.3." *Id.* at 918. The coefficient was a "new ... construct, not previously known in the art," *id.*, but the patents-in-suit lacked two pieces of information essential to understanding the claims. First, although the patents stated that "Figure 1" would depict where on the curve the slope was to be measured, the figure was entirely missing from the patent. *Id.* ("the patents in suit do not, for whatever reason, include the promised drawing"). Second, the patents never specified the units in which the value of 1.3 was to be calculated, even though the same inputs could yield an infringing value when calculated in English units and a non-infringing value when calculated in metric units. *Id.* at 920 ("It is true that the patents in suit do not specify any particular unit for the SHC coefficient.").

---

[5] *Exxon Research & Eng'g Co.* v. *United States*, 265 F.3d 1371 (Fed. Cir. 2001).

[6] *Chiuminatta Concrete Concepts, Inc.* v. *Cardinal Indus., Inc.*, 145 F.3d 1303 (Fed. Cir. 1998).

As a result of these shortcomings, even the patent owner's own engineers and a named inventor could not figure out from the patent how to carry out the calculation in the claims. *See Dow Chem. Co.* v. *NOVA Chems. Corp. (Canada)*, 629 F. Supp. 2d 397, 407 (D. Del. 2009) ("NOVA has elicited testimony from numerous Dow engineers who, after reviewing the patents-in-suit, expressed an inability to calculate the slope of strain hardening. A named inventor on the patents-in-suit was even unable to explain how to carry out this calculation after reviewing the relevant portions of the specification." (citations omitted)). The Federal Circuit nonetheless permitted bare expert testimony to fill the gaps in the patent and, under its permissive standard, held that the claims satisfied the requirements of § 112, ¶ 2.[7]

Other ambiguous claims have also survived review under the Federal Circuit's standard. In *Enzo Biochem, Inc.* v. *Applera Corp.*, 599 F.3d 1325 (Fed. Cir. 2010), the key issue was the definition of a "linkage group," which the claims defined only functionally as a "linkage group that does not substantially interfere" with nucleotide detection, or with hybridization. *Id.* at 1328-1329. The district court held that the claim language "substantially interfere" was indefinite "because '[t]he specifications neither set forth how one would gauge substantial interference, nor delimit the threshold at which interference with the procedure prevents [the claimed] method from being implemented.'" *Id.* at

---

[7] *See* Joint App'x 2518, *Dow Chem. Co.* v. *NOVA Chems. Corp.*, No. 2010-1526 (Fed. Cir.) ("Q. There are no documents that [the jury] can rely on to support your testimony that a person of ordinary skill would have used the maximum slope; correct? A. That's correct.").

1331. The Federal Circuit reversed, noting that examples of possible linkage groups in the specification provided "at least some guidance as to how much interference will be tolerated." *Id.* at 1334. This minimal direction—"at least some guidance"—was sufficient for the Federal Circuit's lenient framework even though it left potential infringers with no way to know whether they had infringed short of extensive testing, a process that would itself lead inexorably to infringement.

In *Fisher-Price, Inc.* v. *Graco Children's Products, Inc.*, 154 F. App'x 903, 906 (Fed. Cir. 2005), the Federal Circuit held that a disputed term was not indefinite because it could be construed. The court pointed out, "two very plausible constructions already have emerged," both from the patent holder. *Id.* at 907. Those two constructions were equally plausible but materially different. Yet, under the Federal Circuit's "amenable to construction" standard, the presence of two equally plausible constructions counted as an argument *against* indefiniteness because it showed that the claims could be construed one way or the other in the end.

As these cases illustrate, the Federal Circuit's "amenable-to-construction" formulation is satisfied in all but the most extreme cases, when a patentee is unable to develop litigation-inspired testimony or provide external evidence that will support its preferred construction. As a result, skilled artisans and the public at large are left to guess about the meaning of vague and ambiguous claims until long after they must make decisions regarding what activities and investments to pursue.

III. THE FEDERAL CIRCUIT'S STANDARD STIFLES BUSINESS AND INNOVATION

A. The Federal Circuit's Standard Encourages Ambiguity In Claim Drafting

The Federal Circuit's indefiniteness standard promotes vague and ambiguous claims by allowing patentees to reap the rewards of their own failure to clearly communicate the scope of their claims without a serious risk that the claims will be deemed indefinite. *See* Judge Plager, *The Federal Circuit as an Institution: On Uncertainty and Policy Levers*, 43 Loy. L.A. L. Rev. 749, 759 (2010) ("One consequence of this particular reading of the statute is that it removes a significant impetus for clearer claim drafting, thus reinforcing the system's tolerance for uncertainty in claims."). This result is the exact opposite of what Congress intended when it passed § 112, ¶ 2.

Ambiguous claims can confer a strategic advantage on patentees because "uncertainties in claim scope increase a patentee's ability to tailor the reach of the claims to future activities and technological developments." Mullally, *Legal (Un)certainty, Legal Process, and Patent Law*, 43 Loy. L.A. L. Rev. 1109, 1137-1138 (2010) ("[P]atent drafters often seek to avoid tying the claims to a particular meaning because to do so would limit the patentee's options when asserting the patent."). Ambiguity also allows patentees more room to maneuver once litigation has started, making it harder to dismiss infringement suits and increasing the pressure to settle in order to avoid the expense of prolonged litigation.

Perhaps unsurprisingly, manuals designed to assist patent drafters specifically counsel drafting the broadest claims possible. *See* Mullally, *supra*, at 1137-1138

(quoting Slusky, *Invention Analysis and Claiming: A Patent Lawyer's Guide* 29-30 (2007)). Although breadth is not always the same as indefiniteness, this impetus to capture as much as possible and retain maximum flexibility often does result in imprecise claims. *See* Judge Plager, *Challenges for Intellectual Property Law in the Twenty-First Century: Indeterminacy and Other Problems*, 2001 U. Ill. L. Rev. 69, 71 (2001) ("[T]he inventor wants to have the claims stated as broadly as possible to cover not only the actual invention but also all possible future variants. Thus, lawyers who draft patent specifications for their clients tend to write claims in the broadest and most general terms possible, sometimes to the point at which it is virtually impossible to grasp what is actually claimed.").

And ambiguity works. Patentees can already "exploit[] the high cost to defend complex litigation [by] extract[ing] a nuisance value settlement" from an accused infringer. *Eon-Net LP* v. *Flagstar Bancorp*, 653 F.3d 1314, 1327 (Fed. Cir. 2011). Ambiguous claims can increase this settlement pressure by increasing the cost of claim construction and making it more difficult to terminate cases early with non-infringement arguments that must be measured against malleable claims.

Unless and until the Federal Circuit's standard is corrected, ambiguous claims will remain a feature of the patent system, sowing uncertainty, stifling competition and innovation, and exacting a substantial cost on the national economy and the public.

B. The Uncertainty Created By The Federal Circuit's Standard Comes At Great Expense To Businesses And To The Public

To successfully invest and innovate, businesses need a reasonable degree of certainty that their efforts

will not result in costly infringement suits that drain resources and distract from more productive activities. The Federal Circuit's definiteness standard fails to provide that assurance. Rather, it increases uncertainty by tolerating unclear claims as long as some meaning can be attributed to them by a court, often years after the fact.

In the face of such uncertainty, some businesses choose to innovate less rather than risk expensive infringement litigation. *See Festo Corp.* v. *Shoketsu Kinzoku Kogyo Kabushiki Co.*, 535 U.S. 722, 730-731 (2002) ("[C]larity [as to the boundaries of a patentee's property right] is essential to promote progress, because it enables efficient investment in innovation."). Moreover, those who do enter the field must divert their research and development budgets to the ever-rising costs of litigating indefinite claims. The consequences of these costs to both business and the public are significant: fewer competitors and less dynamism in emerging fields; substantial sums siphoned from research and development; and diminished economic and scientific progress.

1. The Federal Circuit's acceptance of vague and ambiguous claims reduces total investment in innovation

This Court has long recognized that sufficiently high litigation risk discourages "'enterprise and experimentation' ... 'only a little less than unequivocal foreclosure of the field.'" *Markman*, 517 U.S. at 390 (quoting *United Carbon*, 317 U.S. at 236). The definiteness requirement serves to combat that risk by allowing the public to ascertain "what is still open to them," and what is not. *McClain* v. *Ortmayer*, 141 U.S. 419, 424 (1891); *see also Oakley, Inc.* v. *Sunglass Hut Int'l*, 316

F.3d 1331, 1340 (Fed. Cir. 2003). When this requirement is routinely unenforced—as it is under the Federal Circuit's standard—otherwise viable innovation becomes too costly.

When the risk of expensive litigation is uncertain, companies rationally will choose to invest less, or even not at all. Some companies may forgo investment with respect to a given product or project due to high levels of patent uncertainty. *See, e.g.*, Bessen & Meurer, *Patent Failure: How Judges, Bureaucrats, and Lawyers Put Innovators At Risk* 219 (2008) ("Our empirical analysis has shown that poor patent notice has reduced the incentives to invent."); *see also* Jaffe & Lerner, *Innovation and Its Discontents* 15 (2004) ("[S]mall firms may reduce or alter their investment in R&D. Evidence from surveys and practitioner accounts suggests that the time and expense of intellectual property litigation is a major consideration when deciding whether to pursue an innovation."); FTC, *The Evolving IP Marketplace: Aligning Patent Notice and Remedies with Competition* 76-78 (Mar. 2011). Others may stay out of the market entirely. *See, e.g.*, Sichelman & Graham, *Patenting by Entrepreneurs: An Empirical Study*, 17 Mich. Telecomm. & Tech. L. Rev. 111, 126 (2010) ("[I]t may be that incumbents can strategically exploit weak patents to prevent competition from potential entrants."). In both scenarios, the Federal Circuit's acceptance of ambiguous patent claims drives down overall investment in innovation and the economic growth that it spurs.

The prohibitive uncertainty created by the Federal Circuit's standard also depresses competition. As noted, unclear claims create a "zone of uncertainty" that causes potential competitors to steer well clear, effectively expanding ambiguous claims beyond their proper

scope. *See* Mullally, *supra*, at 1140-1142 ("Patentees can thus use uncertainty in their claim language to their advantage in potentially securing a sphere of protection around their inventions that may be wider than warranted."); *see also* Landes & Posner, *The Economic Structure of Intellectual Property Law* 324 (2003) ("[A]n indefinite claim would tend to enlarge the practical scope of the patent beyond its lawful bounds by imposing legal risks on competitors, who would be buying an infringement suit if they mistook those bounds because the patent claim was unclear.").

The suboptimal level of competition that results is antithetical to the goals of the patent system, which seeks to reward innovation without unnecessarily stifling competition. *See Pfaff* v. *Wells Elecs., Inc.*, 525 U.S. 55, 63 (1998) ("[T]he interest in avoiding monopolies that unnecessarily stifle competition ... has been a feature of the federal patent laws since their inception."); *Bonito Boats*, 489 U.S. at 146 ("[T]he federal patent laws have embodied a careful balance between the need to promote innovation and the recognition that imitation and refinement through imitation are both necessary to invention itself and the very lifeblood of a competitive economy.").

2. The Federal Circuit's acceptance of ambiguous claims taxes innovators with massive litigation costs

For those who choose to innovate in the zone of uncertainty, the Federal Circuit's standard breeds lengthy, costly, and ultimately wasteful litigation over unclear claims. These actions act as a massive tax on innovators, while providing little social benefit.

Businesses spend huge sums on intellectual property litigation each year. One study estimates that where under $1 million is at stake, suits cost $650,000 through trial; where between $1 and $25 million is at stake, suits cost an average of $2.5 million through trial; and where over $25 million is at stake, suits cost at least $5 million to take to trial. American Intellectual Property Law Association, *Report of the Economic Survey 2011*, at 35 (July 2011). The Federal Circuit's indefiniteness standard contributes to this extraordinary cost by making it difficult to invalidate vague and ambiguous claims.

These costly litigations require innovators to spend funds litigating the bounds of unclear patent claims, rather than researching and developing new technologies. They also diminish the value of innovators' businesses. When a corporation becomes a defendant in a patent litigation, the market notices. *See, e.g.*, Executive Office of the President, *Patent Assertion and U.S. Innovation* 9-10 (June 2013) (calculating the total lost wealth due to certain infringement suits from 2007 to 2011 at $300 billion). This, too, is a tax on innovators, reducing their ability to raise capital and to bring new goods and technologies to market.

The impact of unclear claims is felt well beyond the individual businesses affected. It also harms the public by impeding the technological and economic progress that creates jobs and enhances quality of life.

IV. This Court Should Require That Patents Provide Clear Notice Of Claim Scope

This Court should reject the Federal Circuit's indefiniteness standard and replace it with a standard that requires clear notice of claim scope. The clear notice standard is consistent with years of precedent and

would align the definiteness test with the overarching purpose of § 112, ¶ 2.

This Court has used varying formulations over the years to describe the definiteness requirement, but the common theme in all the cases is that clarity and notice are the lynchpins of the requirement. *See United Carbon*, 317 U.S. at 236 ("The statutory requirement of particularity and distinctness in claims is met only when they clearly distinguish what is claimed from what went before in the art and clearly circumscribe what is foreclosed from future enterprise."); *Universal Oil*, 322 U.S. at 484 ("precision of disclosure is ... essential to warn the industry concerned of the precise scope of the monopoly asserted"); *Permutit Co.* v. *Graver Corp.*, 284 U.S. 52, 60 (1931) ("The statute requires the patentee ... to inform the public during the life of the patent of the limits of the monopoly asserted, so that it may be known which features may be safely used or manufactured without a license and which may not."); *McClain*, 141 U.S. at 424 ("The object of the patent law in requiring the patentee [to distinctly claim his invention] is ... to apprise the public of what is still open to them."); *Merrill*, 94 U.S. at 573 ("The public should not be deprived of rights supposed to belong to it, without being clearly told what it is that limits these rights.").

This Court should reaffirm that the touchstone of definiteness is clear notice. Under this standard, the question would not be whether claims are amenable to some construction. Rather, as the statute says, claims would be required, to "particularly point[] out and distinctly claim[]" their subject matter, thereby providing competitors and the public with clear guidance on what is and is not prohibited.

The determination whether any particular claim fails to provide clear notice is necessarily case-specific, but there are a number of common principles and warning signs that indicate that a claim has not provided sufficient guidance:

First, claims must particularly describe what is claimed and point out the limitations of those claims, so that it is clear both what the claimed invention is and what it is not.

Second, a person of ordinary skill should be able to readily ascertain the meaning of a claim by looking at the claims and the specification. When that meaning cannot be determined without resort to more remote sources, the notice function of the claims is defeated and the burden of searching for meaning is improperly placed on the public rather than on the patentee who is in the best position to clarify its claims.

This emphasis on providing clarity within the four corners of the patent, as read by a person of ordinary skill in the art, would bring the interpretation of § 112, ¶ 2 back into alignment with the rest of § 112. This Court has long noted the close relationship between the written description and enablement requirements of § 112, ¶ 1 and the definiteness requirement of § 112, ¶ 2. *See Universal Oil*, 322 U.S. at 484 ("[T]he quid pro quo is disclosure of a process or device in sufficient detail to enable one skilled in the art to practice the invention once the period of the monopoly has expired; and the same precision of disclosure is likewise essential to warn the industry concerned of the precise scope of the monopoly asserted."); *see also Markman*, 517 U.S. at 373. In the context of the written description requirement, the en banc Federal Circuit has held that

> the test requires an objective inquiry *into the four corners of the specification* from the perspective of a person of ordinary skill in the art. Based on that inquiry, the specification must describe an invention understandable to that skilled artisan and show that the inventor actually invented the invention claimed.

Ariad Pharm., Inc. v. *Eli Lilly & Co.*, 598 F.3d 1336, 1351 (Fed. Cir. 2010) (emphasis added). Similarly, the definiteness requirement should "require[] an objective inquiry into the four corners of the specification from the perspective of a person of ordinary skill in the art."

In particular, unsupported assertions by an expert that claims are understandable to one of ordinary skill should not be sufficient to defeat a definiteness challenge. Such expert testimony is too easily manipulated and, by definition, is not available to competitors, innovators, and members of the public at the time they make decisions about how to structure their primary conduct. As the Federal Circuit itself has recognized, undue reliance on unsupported expert testimony is "unfair to competitors who must be able to rely on the patent documents themselves, without consideration of expert opinion that then does not even exist, in ascertaining the scope of a patentee's right to exclude." *Southwall Techs., Inc.* v. *Cardinal IG Co.*, 54 F.3d 1570, 1578 (Fed. Cir. 1995); *see Phillips* v. *AWH Corp.*, 415 F.3d 1303, 1318 (Fed. Cir. 2005) ("[C]onclusory, unsupported assertions by experts as to the definition of a claim term are not useful to a court."). Instead, to the extent a patentee relies on evidence to establish the perspective of a person of ordinary skill, it must be clearly grounded in the prior art and measured against the public notice function of patent claims.

Third, courts should take into account the difficulty of claim construction. Claim construction is an unavoidable part of patent litigation, and not every claim construction dispute should lead to a finding of indefiniteness. But freed from the constraints of the Federal Circuit's current standard and guided by the requirement of clear notice, courts are well suited to distinguish between ordinary disputes over the meaning of claims on the one hand, and genuine ambiguity on the other. When construing a claim requires undue effort, the correct construction is genuinely doubtful, or there is substantial and reasonable disagreement among persons of ordinary skill as to the claim's meaning, it indicates that the claims did not clearly communicate their scope to skilled artisans.

Fourth, when a patent uses vague terms with no established meaning in the art, courts should insist that the specification clarify the meaning of those terms. Technical terminology is to be expected in patents. But too often, patents use newly minted jargon or barely comprehensible combinations of words with no ordinary meaning to obscure the precise scope of claims and thereby preserve maximum flexibility to stretch those claims in the future. This practice should not be tolerated. When a patent uses unintelligible terms, the solution is not to force a meaning onto the term where none is apparent, as the Federal Circuit's current standard encourages. Rather, patentees should be given an incentive to clarify those terms at the outset by requiring them to bear the risk that a lack of comprehension will lead to invalidation.

Fifth, courts should be deeply suspicious of subjective terms in patent claims. *See, e.g.*, *Datamize, LLC* v. *Plumtree Software, Inc.*, 417 F.3d 1342, 1345 (Fed. Cir. 2005) (claimed invention with an "aesthetically pleasing

look and feel"). Claim scope should not depend on the subjective opinion of a particular individual practicing the claim or alleging infringement.

Sixth, when patents use terms of degree, the specification must supply a standard for measuring that degree. *See, e.g.*, *Hearing Components*, 600 F.3d at 1367. Preferably, it should be a standard recognized in the art. If not, even greater specificity in the patent should be required.

Seventh, when claims refer to measurements or equations, it should be clear from the specification how the measurement should be taken and what units are being used. There is no excuse for the public to have to guess whether "2.7" means feet, inches, meters, or centimeters. *See, e.g.*, *Dow Chem. Co.*, 458 F. App'x at 920. Nor should one have to search beyond the patent to determine this information.

These principles do not exhaust what it means to provide clear notice, but they would go a long way toward achieving a more balanced application of § 112, ¶ 2. By hinging the definiteness requirement on the degree of notice the claims provide, a clear notice standard aligns the application of the definiteness requirement with its underlying purposes. Innovators will be able to ascertain the bounds of a patent, and assess with some degree of certainty what remains open to them. The patentee—who was in the best position to prevent any shortcomings in his claiming—will bear the attendant consequences if his claiming is ambiguous. A clear notice standard therefore will properly allocate the risks inherent in innovation, which is itself a chief aim of § 112's notice function.

This case presents this Court with a timely opportunity to reaffirm that the touchstone of the definite-

ness requirement is clear notice. By adopting a practical, workable framework that emphasizes the importance of clear notice this Court will reinvigorate the definiteness requirement. That in turn will have a profound positive impact on business innovators and the public alike.

CONCLUSION

The judgment of the court of appeals should be vacated.

Respectfully submitted.

DONALD R. DUNNER*
DARREL C. KARL
MARK J. FELDSTEIN
RONALD A. BLEEKER
FINNEGAN, HENDERSON, FARABOW, GARRETT & DUNNER, LLP
901 New York Ave., NW
Washington, DC 20001

H. WOODRUFF TURNER*
K&L GATES LLP
210 Sixth Avenue
Pittsburgh, PA 15222

WILLIAM C. MITCHELL*
GARY F. MATZ
NOVA CHEMICALS INC.
1555 Coraopolis Heights Rd.
Pittsburgh, PA 15108

SETH P. WAXMAN
Counsel of Record
THOMAS G. SAUNDERS
CHRISTINA MANFREDI MCKINLEY
WILMER CUTLER PICKERING HALE AND DORR LLP
1875 Pennsylvania Ave., NW
Washington, DC 20006
(202) 663-6000
seth.waxman@wilmerhale.com

ARI SAVITZKY
WILMER CUTLER PICKERING HALE AND DORR LLP
7 World Trade Center
250 Greenwich Street
New York, NY 10007

* *Counsel for NOVA Chemicals Inc.*

MARCH 2014

AMICUS CURIAE BRIEF

RECORD
AND
BRIEFS

Supreme Court, U.S.
FILED
MAR - 3 2014
OFFICE OF THE CLERK

No. 13-369

IN THE
Supreme Court of the United States

NAUTILUS, INC.,
Petitioner,
v.
BIOSIG INSTRUMENTS, INC.
Respondent.

On Writ of Certiorari to the United States Court of Appeals for the Federal Circuit

BRIEF OF AMICUS CURIAE SIGRAM SCHINDLER BETEILIGUNGSGESELLSCHAFT mbH, IN SUPPORT OF NEITHER PARTY

Chidambaram S Iyer*
Sughrue Mion, PLLC
2100 Pennsylvania Ave, NW
Suite 800
Washington, DC 20037
Tel: (202) 293-7060
ciyer@sughrue.com

Attorneys for Sigram Schindler Beteiligungsgesellschaft mbH

March 3, 2014 *Counsel of Record

Library of Congress
Law Library

i. TABLE OF CONTENTS

		PAGE
STATEMENT OF IDENTITY&INTEREST		1
SUMMARY OF THE ARGUMENTS		2
ARGUMENTS		6
I.	THE FSTP-TEST IMPLEMENTS *MAYO*, THUS TESTS ALSO FOR (IN)DEFINITENESS	6
II.	NOTIONAL, DEFICITS IN A CONFLICT ABOUT A CLAIM'S (IN)DEFINITENESS	18
CONCLUSION		33

TABLE OF AUTHORITIES

CASES	PAGE
KSR Int'l Co. v. Teleflex Inc., 127 S. Ct. 1727, 82 USPQ2d 1385 (2007).....	1, 2, 3, 16, 32, 33, 37
Bilski v. Kappos, 130 S. Ct. 3218 (2010).....	1, 2, 3, 14, 16, 32, 33, 37
Mayo Collaborative Servs. v. Prometheus Labs., Inc.,132 S. Ct. 1289 (2012).....	1, 2, 3, 4, 5, 6, 11, 15, 16, 24, 25, 26, 27, 28, 31, 32, 33, 34, 35, 36, 37
Association for Molecular Pathology v. Myriad Genetics, 569 U.S. 12-398 (2013)	1, 2, 16, 33, 37
Lighting Ballast Control LLC v. Philips Elects. N. Am. Corp., 2013 U.S. App. LEXIS 5185, 2, 2013 (Fed. Cir. 2013, 2014)	18
Markman v. Westview Instruments, Inc., 517 U.S. 370 (1996)	16, 33
Noah Systems, Inc. v. Intuit Inc., 675 F. 3d 1302 (Fed. Cir. 2012)	15, 18

iii. STATUTES

	PAGE
35 U.S.C. § 101	1, 4, 5, 6
35 U.S.C. § 102	1, 5, 6
35 U.S.C. § 103	1, 5, 6, 32
35 U.S.C. § 112	1, 2, 4, 5, 6, 9, 12,13, 15, 18
35 U.S.C. § 282	2, 34

iv. OTHER AUTHORITIES

[1] S. Schindler: "US Highest Courts' Patent Precedents in *Mayo/Myriad/CLS/Ultramercial/LBC*: 'Inventive Concepts' Accepted – 'Abstract Ideas' Next? Patenting Emerging Tech. Inventions Now without Intricacies" •).

[2] "Advanced IT" denotes IT research areas such as AI, Semantics, KR, DL, NL, ...

[3] R. Brachmann, H. Levesque "Knowledge Representation & Reasoning", Elsevier, 2004.

[4] "The Description Logic Handbook", Cambridge UP, 2010.

[5] S. Schindler: "Math. Model. Substantive Patent Law (SPL) Top-Down vs. Bottom -Up", Yokohama, JURISIN 2013•).

[6] SSBG pat. appl.: "THE FSTP EXPERT SYSTEM"•).

[7] SSBG pat. appl.: "AN INNOVATION EXPERT SYS., IES, & ITS DATA STRUC., PTR-DS"•).

[8] J. Schulze: "TECHNICAL REPORT #1.V1 ON THE '882 PTR AND THE UI OF THE IES PROTOTYPE", in prep.

[9] S. Schindler: "Patent Business – Before Shake-up", 2013•)

[10] SSBG's AB to CAFC in *LBC*, 2013•).

[11] SSBG pat. appl.: "INV. CONC. ENABL. SEMI-AUTOM. PATENT TESTS"•).

[12] C. Correa: "Res. Handbook on Protection of IP under WTO Rules", EE, 2010.

[13] N. Klunker: "Harmonisierungsbestr. im mater. Patentrecht", MPI Mü, 2010.
[14] USPTO/MPEP: "2111 Claim Interpretation; Broadest Reason. Interpr. [R-9], "*).
[15] S. Schindler: "KR Support for SPL Precedents", Barcelona, eKNOW-2014*).
[16] J. Daily, S. Kieff: "Anything under the Sun Made by Humans SPL Doctrine as Endogenous Institutions for Commercial Innovation", Stanford and GWU*).
[17] Enbanq Hearing in *LBC*, CAFC, 12.09.2013.
[18] SSBG AB to the Supreme Court in *CLS*, 07.10.2013*).
[19] SSBG AB to the Supreme Court in *WildTangent*, 23.09.2013*).
[20] **USPTO, *"Intell. Prop. and the US Economy: INDUSTR. IN FOCUS", 2012*)**.
[21] K. O'Malley: Keynote Address, IPO, 2013*).
[22] S. Schindler, "*The View of an Inventor at the Grace Period*", Kiev, 2013*).
[23] S. Schindler, "*The IES and* its *In-C Enabled SPL Tests*", Munich, 2013*).
[24] S. Schindler, "*Two Fundamental Theorems of Math. Innovation Science*", Hong Kong, ECM-2013*).
[25] S. Schindler, A. Paschke, S. Ramakrishna, *"Form. Legal Reason. that an Invention Sat. SPL"*, Bologna, JURIX-2013*).
[26] SSBG AB to the Supreme Court in Bilski, 6.8.2009*).
[27] T. Bench-Capon, F. Coenen: "*Isomorphism. and Legal Knowl. Based Systems*", AI&Law, 1992*).

[28] N. Fuchs, R. Schwitter. "*Attempt to Controlled English*", 1996.

[29] A. Paschke: "*Rules and Logic Program. for the Web*". 7. ISS, Galway, 2011.

[30] K. Ashley, V. Walker, "*From Information Retrieval to Arg. Retrieval for Legal Cases: .....*", Bologna, JURIX-2013•).

[31] Hearing in Oracle vs. Google, "As to Copyrightability of the Java Platform", CAFC, 6.12.2013.

[32] S. Schindler, "*A KR Based Innovation Expert System (IES) for US SPL Precedents*", Phuket, ICIM-2014•).

[33] S. Schindler, "*Status Report About the FSTP Prototype*", Hyderabat, GIPC-2014.

[34] S. Schindler, "*Status Report About the FSTP Prototype*", Moscow, LESI, 2014.

[35] S. Schindler, "*Substantive Trademark Law STL), Substantive Copyright Law (SCL), and SPL – STL Tests Are True SCL Subtests, and SCL Tests Are True SPL Subtests*", in prep.

[36] S. Schindler, "*Inventive Concepts are not Just Inventive – They are Multi-Mongrels*", in prep.

[37] D.-M. Bey, C. Cotropia, "*The Unreasonableness of the BRI Standard*", AIPLA, 2009•)

[38] Transcript of the Hearing in TELES vs. CISCO/USPTO, CAFC, 8.1.2014•).

[39] Transcript of the en banc Hearing in CLS vs. ALICE, CAFC, 8.2.2013•).

[40] SSBG's Brief to the CAFC in case '453•).

[41] SSBG's Brief to the CAFC in case '902•).

[42] SSBG's Amicus Brief to the CAFC in case *CLS*, 06.12.2012*).
[43] SSBG pat. appl. "SEMI-AUTO. GENER. /CUSTOM. OF (ALL) CONF. LEGAL ARG. CHAINS (LACS) IN AN INV.'S SSPL TEST, ENAB. BY ITS In-Cs",*).
[44] R. Rader, Panel Discussion "*Patent on Life Sciences*", Berlin, 28.11.2012.
[45] SSBG's AB to the Supreme Court as to the CII Question, Jan. 28, 2014*).
[46] S. Schindler: "*Autom. Deriv. of Leg. Arg. Chains (LACs) from Arguable Subtests (ASTs) of a Claimed Invention's Test for Satisf. SPL*", submitted for publication*).
[47] S. Schindler: *"Auto. Gen. of All ASTs for an Inv.'s SPL Test"*, subm. for public.*).
[48] USPTO/MPEP, "2012 ... Proc. for Subj. Matter Eligibility ... of Process Claims Involving Laws of Nature", 2012*).
[49] USPTO/MPEP, Guidelines 35 U.S.C. 112(2), Federal Register / Vol. 76, No. 27; MPEP 2171, Rev. 9, Aug. 2012*).
[50] NAUTILUS v. BIOSIG, PFC, 2013*).
[51] BIOSIG, Respondent, 2013*)
[52] Public Knowledge et al., AB, 2014*).
[53] Amazon et al., AB, 2014*).
[54] White House, FACT SHEET - "*... the President's Call to Strength. Our Patent System and Foster Innovation*", 2014*).
[55] USPTO: see home page.
[56] IPO: "*Patent Claim Limitation Construed According to Claims, Specification, and Prosecution History and Not 'Universally Accepted Meaning'* ", see home page.

[57] M. Adelman, R. Rader, J. Thomas: "Cases and Materials on Patent Law", West AP, 2009.

*) see www.fstp-expert-system.com

STATEMENT OF IDENTITY AND INTEREST

Sigram Schindler Beteiligungsgesellschaft mbH and its subsidiaries (collectively "SSBG") are research-based high technology companies located in Berlin, Germany, developing and selling products also in the US, primarily via TELES AG. SSBG is a majority shareholder of TELES AG, founded 1983 by Sigram Schindler[1)].

SSBG's business is dependent upon patent protection, in particular in the United States and Europe. Strong patent systems require that the patents issued are consistently interpreted. Thus, SSGB has a vested interest in supporting the US patent system in its on-going development in adjusting itself to the needs of the emerging technologies. This Court indicated by its groundbreaking *KSR/Bilski/Mayo/Myriad* decisions what these needs are and how it requires meeting them by precedents as to 35 USC §§ 101/102/103/112. This brief aims at supporting this development by showing that these Supreme Court requirements facilitate US SPL precedents by providing to it an Advanced IT basis.

This brief, in support of neither party, is filed on behalf of *Amicus Curiae* SSBG – which has no financial interest in either side.

---

[1] Pursuant to Supreme Court Rule 37.6, amicus curiae states, that no counsel for a party authored this brief in whole or in part, and no entity or person other than amicus curiae, its members, and its counsel, made any monetary contribution toward the preparation or submission of this brief. Letters from the parties consenting to the filing of this brief are on file with the Clerk.

SUMMARY OF THE ARGUMENT

The two questions, which this Court wants to be answered by Amicus Briefs, are:

"I Whether Petitioner has shown that the Federal Circuit's test for patent indefiniteness under 35 USC § 112(2) conflicts with this Court's precedent .....

II Whether the Federal Circuit erred in giving respect to the presumption of validity specified by Congress in 35 USC § 282 in considering the invalidity defense of indefiniteness under 35 USC §112(2)."

They both have a common key issue: "What aspects of a claimed invention and its claim render it definite or indefinite[a)], under 35 USC §§ 112(2)/282?"

This latter question is quite similar to the question recently asked by this Court as to computer-implemented inventions ("**CIIs**"), i.e.: "What aspects of a claimed CII render it patent-eligible or non-patent-eligible, under 35 USC § 101 – in the light of KSR/Bilski/Mayo/Myriad?".

The meaning of the term "patent-eligible" has been derived, up to *Mayo,* by two SSBG Amicus Briefs [18,45] from 35 USC directly[2)a)]. Here, this is possible for the term "definite", too. In both cases the so gained meanings of the terms/notions [18.ftn3. par2] "patent-eligible"/"definite" enable determining the resp. aspects of any claimed invention, which define its being patent-eligible resp. definite[2)b)].

---

[2] **a)** If this had been impossible, this meaning would have had – or would had – to be derived by a court.

b) In both cases holds: A claimed invention is legally "non-patent-eligible" resp. "indefinite" iff it lacks one of the respectively determined aspects for rendering it "patent-eligible" resp. "definite".

In both cases it is the "**FSTP-Test**", which enables exactly and deterministically determining, whether any given claimed invention has the resp. aspects rendering it "definite" resp. "patent-eligible".

The FSTP-Test is due to the openness, with which this Court and the CAFC manage the development of US patent precedents. It vastly has been inspired by the questions both Highest Courts put forward in their invitations of Amicus Briefs – to which SSBG responded by its pertinent Amicus Briefs [10,18] to both Highest Courts[3]. It nevertheless is elaborated on in this brief, once more, just as some principles underlying it[4] – the same in SPL precedents and in fundamental Mathematics/elementary Logic/Advanced IT – which enables answering the questions I and II by showing the big step forward in understanding the US substantive patent law ("SPL") due to its *Mayo* interpretation[3].

The FSTP-Test is a logical conjunction of presently 10 FSTP (sub)tests, called "**FSTP test.o**"[7], $1 \leq o \leq 10$. Any FSTP test.o is focused on a single

---

[3] The FSTP-Test has been presented, as *KSR/Bilski/Mayo* descendant, in much more detail already and far further developed in a series of other recent FSTP publications – as shown by the above references list. These publications are either •) scientific and then mathematically and/or in Advanced IT deeper going [5,15,24, 25,46,47], or •) predictive and then consensus-making/ education oriented [1,9,10,18,19,22,23,26,32,33,34,42, 45], among them six Amicus Briefs to this Court resp. the CAFC – starting with *Bilski* [26] – or just •) patent applications concerning "FSTP Technology" [6,7,11,43], anyway having both characteristics vastly overlapping.

SSBG's textbook on "Patent Technology" is unfortunately not yet available (in preparation).

"SPL concern" and checks the claimed invention at stake for its and its inventive concepts satisfying this SPL concern – except FSTP test.1 checking 2 SPL concerns. The above two aspects of a claimed invention, its patent-eligibility and its definiteness, correspond 1:1 to two SPL concerns [5,10,11,18,25].

A claimed invention satisfies SPL iff it and its inventive concepts satisfy all SPL concerns.

The above 4 SPL §§ of 35 USC embody and their interpretation by this Court ex- and implicitly identified hitherto a total of 11 US SPL concerns[7].

The 10 FSTP test.o are ordered hierarchically[4] – just as the 11 SPL concerns, both thus avoiding circular statements – and evidently induce this hierarchical order also on the 11 such aspects of any claimed invention under US SPL test.

This Court's *Mayo* decision ex- or implicitly requires to identify these aspects of a claimed invention by its "inventive concepts". These thus must be determined by a first step in construing the "refined" claim construction for it[6] – as one cannot assume the Supreme Court would require describing aspects of a claimed invention by terms/notions not justified by § 112, as this would render meaningless the claimed invention's § 101 test that *Mayo* prescribes.

---

[4] This brief elaborates also on other issues in SPL precedents, not immediately to recognize as impacting on questions I or II – e.g. the tolerable complexity of a claim's wording, not belonging to the hierarchical order between SPL concerns and induced by it on the peer aspects of a claim(ed invention)[8] as such when being SPL-tested. These issues need not necessarily ever appear before a court. The other ones did already (as the pending one) or will, sooner or later, as soon as noticed.

I.e., *Mayo* already addresses – by the refined claim construction it requires, as compared to the classical one [25,18] – the above key issue and thereby induces its principal resolution, as shown below.

Yet: *Mayo* deals solely with claimed pharmaceutical inventions and determining their patent-eligibility. But, its reasoning covers not only these two aspects of a claimed invention. This reasoning covers •) any claimed invention (in checking its satisfying SPL, i.e. 35 USC 112/101/102/103, if of emerging technology anyway) and •) all its 11 SPL aspects.

This Court emphasized this far reach of its unanimous *Mayo* decision[5)] by asking the CAFC in a whole series of legally quite different cases to reconsider its decisions in the light of *Mayo*.

The ARGUMENT hence focuses on *Mayo's*

- implementation by the FSTP-Test and its impact on the replies to the questions I and II, and thus
- a basic confirmation of the CAFC's 'insoluble ambiguity' test and proving that relaxing it – as desired by the opponents – would contradict 35 USC SPL.

It thereby shows that only Advanced IT cognition as to these questions enables objectively deciding them.

The CONCLUSION of this argument hints at its consequences and the help desired by this Court.

---

[5] This motivated SSBG to invest into the scientific R&D of what an invention is, as such and as seen by SPL and its precedents, as well as into leveraging on its results[3)] – especially by developing and disseminating the so enabled Mathematical KR insights, here called "Patent Technology"[3)], including a FSTP-Test based prototype system of an "Innovation Expert System, IES" capable of managing interpretations of claim(ed invention)s. It is currently focused on US SPL, but simply expandable.

ARGUMENTS

I. THE FSTP-TEST IMPLEMENTS *MAYO*, THUS TESTS ALSO FOR (IN)DEFINITENESS

The preceding presentations summarized that *Mayo* is groundbreaking for claimed inventions' SPL tests, as intellectually paving the way for construing their "refined claim constructions"[6] by disaggregating their compound tests under §§ 101/102/103/112 into 10 FSTP test.o[7] checking these inventions satisfying the 11 US SPL concerns – their definiteness and patent-eligibility being two of these 11 concerns.

Here the structure/working of this complex FSTP-Test[5] is explained by its principles – stressing the decisive role of multiple interpretations of a claim(ed invention) therein – after the following two introductory paragraphs.

---

[6] *Mayo* nowhere explicitly uses the terms "SPL" or " claim construction" for claim(ed invention)s to be SPL tested. This doesn't mean, *Mayo* would not deal with the notions of these terms [7,10]. The contrary is true: Most of what *Mayo* states are SPL requirements to be met by a claim(ed invention)[8] for its(their) satisfying SPL[9] [19,25,45/ftn5] – be the invention at stake an emerging technology invention or not.

Broadly established counter statements against this phenomenon – such as "... there is no claim construction language in *Mayo* ..." or alike about *Mayo* [38] – are absolutely untenable [45/ftn5] as representing wishful but erroneous and hence today totally outdated thinking about the informative power and clarity of natural language wordings [7.ftn1-3]. This untenable thinking also caused the case underlying this invitation of Amicus Briefs, as elaborated on by Subsection II.

Firstly: Applying the FSTP-Test to a claimed invention means construing the refined claim construction for it. I.e.: Stating that this refined claim construction is construable is equivalent to stating this claimed invention passes the FSTP-Test. Thereby holds: A claimed invention passes its SPL test iff it passes the FSTP-Test.

Secondly: The outline[7)] of the FSTP-Test needs explanations, provided below. Up-front is evident:

- It starts with FSTP test.1, which •) interpretation controlled transforms the claimed invention's creative/inventive concepts ("cr/in-**Cs**") if "**compound**" or not binary by disaggregation into "**binary elementary disclosed (BED)**" inventive concepts [7,10]), thereby •) checking twice their – interpretation depending! – "definiteness", and then incrementally checks by FSTP test.o, o=2,3,...,10, the claim(ed invention) for its satisfying all other SPL concerns, again interpretation depending.
- It is logically enormously complex. Showing part of this complexity here serves the purpose to indicate, how many details and their sophisticated interrelations are involved in any claim(ed invention)'s test for its satisfying SPL. With all likelihood, hitherto this amount of sophisticated but very real complexity – only very briefly sketched here, not explained – has hitherto never been understood. Hence the established belief, claimed inventions' SPL tests were rationally decidable without scientific scrutiny, e.g. by the FSTP-Test. Applying this scientific/mathematical scrutiny to SPL testing, e.g. by the FSTP-Test, discloses new legal problems. Some of them are identified below. These will be resolved by the US Highest Courts.

In principle, the FSTP-Test works as follows[7]:

---

[7] The below description of the FSTP-Test – i.e. of its 10 FSTP test.o, o=1,2,...,10 – is here heavily abbreviated and adapted to these abbreviations [46,47]. Any term "justify" or acronym thereof is controlled by the selected claim interpretation. This is an interpretation of the claim(ed invention), **not just of the tested claim**!!!

Several of the hitherto unnoticed intricacies in a claimed invention's SPL test may be allocated by the Highest Courts to other FSTP test.o's than done below – the scientific scrutiny of the FSTP-Test is open to such adjustments. The "patenting English" language used presents the FSTP-Test as being a CII, which guides its user through its execution on a claim(ed invention).

1) The FSTP-Test starts, ∀ claim interpretations, with the **justified definite disaggregation** of the compound inventive concepts, after the posc[18] **justified these definite** for the selected interpretation, comprising the steps: It
   (a) prompts the user for the claimed invention's and prior art's docs with "**marked-up items, MUIs**";
   (b) automatically identifies all doci-MUI's as BAD-$\underline{X}$in;
   (c) prompts ∀interpretations for an initial
   $$S::= \{BED\text{-}cr\text{-}C0k \mid 1\leq k\leq K\};$$
   (d) prompts for posc's definite justification of S;
   (e) prompts to disaggregate ∀BAD-$\underline{X}$0n by :
   $$\{BED\text{-}cr\text{-}\underline{C}0k^n \mid 1\leq k^n\leq K^n\} \subseteq S \quad \wedge$$
   $$BAD\text{-}\underline{X}0n ::= \wedge^{1\leq k^n\leq K^n} BED\text{-}cr\text{-}\underline{C}0k^n,\ 1\leq n\leq N \quad \wedge$$
   $$BED\text{-}cr\text{-}\underline{C}0k^n \neq BED\text{-}cr\text{-}\underline{C}0k^{n'}\ \forall n\neq n' \wedge \sum^{1\leq n\leq N} K^n = K;$$
   (f) prompts ∀ BAD-$\underline{X}$0n for the posc's definite justification of its disaggregation in (e).

2) Justifying the **lawful disclosures** of S
   a It prompts ∀BED-cr-$\underline{C}$0k^n for a not yet used disclosure DIS'(BED-cr-C0k^n) ::={MUI.0s disclosing this BED-cr-C0k^n lawfully};
   b prompts for JUS^{dis}(DIS'(BED-cr-C0k^n));

3) Justifying **definiteness** under § 112.6 of S
It prompts ∀BED-in-C0k$^{n'}$ used in a means-plus-function-clause for a JUS^{def}(BED-in-C0k$^{n'}$) of its definiteness due to its DIS(BED-in-C0k$^{n'}$);

4) Justifying **enablement** of S
It prompts ∀ BED-in-C0k^{n} ∈ S for a JUS^{ena}(BED-in-C0k^{n}, S) of its enablement in S, due to DIS(BED-cr-C0k^{n}) of some BED-cr-C0k^{n}∈S;

5) Justifying **independence** of S
It prompts ∀ BED-in-C0k^{n} ∈ S for a JUS^{ind}(BED-in-C0k^{n}, S), due to BED-in-C0k^{n} not evidently derivable from S\BED-in-C0k^{n};

6) Justifying **posc-nonequivalenc** of S
a if |RS|=0 then BED*-in-C0k ::= "dummy";
b else performing c-f ∀ 1≤i≤|RS|;
c It prompts to disaggregate ∀ BAD-Xin into
$\wedge^{1\le kn\le Kn}$BED-in-Cik^{n};
d It prompts to define BED*-in-Cik^{n} ::=
either BED-in-C0k^{n} iff BED-in-Cik^{n} = BED-in-C0k^{n}
∧ disclosed ∧ definite ∧ enabled,
else "dummy(ik^{n})";
e It prompts for JUS^{posc}(BED*-in-Cik^{n}).

7) Justifying TT.0 is **not an abstract idea only** over S
It prompts to invoke the NAIO test*) on the pair (S,P).

8) Justifying TT.0 is **not natural phenomena solely** over S
It prompts ∀BED-in-C0k^{n} for JUS^{NNPS}(BID-in-C.0.k^{n})};

9) Justifying TT.0 is **novel and nonobvious** over S
It prompts to invoke the NANO test**) on the pair
(S, if |RS|= 0 then {BED*-in-C0k | 1≤k≤K}
else {BED*-in-Cik | 1≤k≤K, 1≤i≤|RS|});

10) Justifying TT.0 is **not idempotent** S' ⊆ S
It prompts to invoke the NANO test**) as in 9), but replacing S by S' comprising all inventive concepts in S.

The following list of items i)-v) compares the FSTP-Test to the 'insoluble ambiguity' test and explains the description and working of the FSTP-Test

i) The best approach to explaining the working of the FSTP-Test is to start with the just mentioned comparison. As its name indicates, the 'insoluble ambiguity' test of a claim(ed invention)[8] leaves it to its user to somehow figure out, whether there is

---

*) The **"Not an Abstract Idea Only, NAIO"** test basically comprises 4 steps [5,7,10,25,18]:

1) verifying that the specification of the claimed invention discloses a problem, P.0, described to be solved by it, the latter being described by S;
2) verifying, using the inventive concepts of S, that the claimed invention solves P.0;
3) verifying that P.0 is not solved by the claimed invention, if therein an inventive concept of S is removed or relaxed;
4) if all verifications 1)-3) apply, then this claimed invention is "not an abstract idea only".

) The **"Novel And Not Obvious, NANO" test basically comprises 4 steps, checking all "anticipation combinations, ACs" of S derivable from any prior art documents' invention [6]:

1) generating the ANC matrix, its lines representing for any prior art document its invention, and its columns representing the elements of S;
2) generating, for any entry in the ANC matrix, its "Anticipates/Non-ants/Contradicts" relation;
3) automatically deriving from the ANC matrix the {AC} with the minimal number Q^{plcs} of NC-entries;
4) automatically delivering $<Q^{plcs},\{AC\}>$, indicating the claimed invention's creativity.

a non-ambiguous interpretation of it, qualifying it as definite iff such an interpretation is found.

The FSTP-Test guides the user in dependably figuring this out: It systematically checks all finitely many options, whether there is at least one, in which the claimed invention under test satisfies all 11 SPL requirements mentioned above.

How to perform this exhaustion of all these options is left away here, but discussed e.g. in [7,11].

ii) There are three decisive distinctions between both tests: The FSTP-Test

1.) performs this exhaustive search by means of the claimed invention's finitely many inventive concepts making it up [7], while the 'insoluble ambiguity' test doesn't yet know *Mayo's* notion of 'inventive concept' and hence does not know how to make its search being finite.

2.) knows from *Mayo* a priori that any inventive concept disclosed by the specification, therein explicitly named or not, may be taken into account in a claim interpretation, while the 'insoluble ambiguity' test doesn't know such freedom/obligation in/to •) exploring the specification for disclosures of inventive concepts embodied by the invention underlying the specification [45] – i.e. used by some claim interpretation disclosed by the specification – and •) leveraging on all findings obtained by this scrutiny of searching for all of the only finitely many claim interpretations in the specification [7]. The notions of 'claim' and 'claim interpretation' here in 2.) and 3.) just used, are explained in detail in Section IIB).

3.) knows from *Mayo* a priori, now refining 2.), that for any single inventive concept "IN-C°"

thus found as used by some claim interpretation "INT°" of the claim(ed invention) underlying the specification [45], holds the following: IN-C° must – alone and jointly with the other IN-C°s this interpretation INT° uses – in INT°

a) meet also the other § 112 requirements q.1, q.3, q.4, q.5,q.6, and

b) not turn the whole claimed invention into an abstract idea only or a natural law,

while the 'insoluble ambiguity' test, if not knowing about INT° – often occurring as barred from using the notion of 'inventive concept' – cannot check its IN-C°s for **a)** and **b)**.

iii) But, the 'insoluble ambiguity' test pursues the in principle same decision strategy like the FSTP-Test as to a claim(ed invention)'s (in)definiteness. Though, by its end, it might state an interpretation as non-ambiguous and hence qualify the tested claim(ed invention) to be definite, although this interpretation potentially may have another flaw, making the tested claim(ed invention) fail its SPL test and hence would render void this definiteness decision – while the FSTP-Test may detect another claim interpretation passing the SPL test (which then would pass the 'insoluble ambiguity' test, too).

Thus, the 'insoluble ambiguity' test is logically a test of a claim(ed invention), the passing of which is only necessary – even the minimal necessity – for this claim(ed invention) to be qualified definite, but this passing is not sufficient to this end. I.e., the 'insoluble ambiguous' test is incapable of qualifying a claim(ed invention) as definite.

By contrast, the FSTP-Test is designed, right from its outset, to check the tested claim(ed invention) for meeting all 11 SPL requirements, inclu-

ding its definiteness requirements. In the wake of its execution, it thus checks all the criteria, which in total are necessary and sufficient for the claim(ed invention)'s definiteness – being one of the 11 § 112 concerns. I.e., the FSTP-Test is a much more rigorous definiteness test – as required by 35 USC SPL – than the 'insoluble ambiguity' test.

In total: For a claim(ed invention) its passing •) the FSTP-Test is necessary and sufficient for its being definite, •) the 'insoluble ambiguity' test is necessary for its being definite, and •) any further relaxed test says absolutely nothing about its being definite.

iv) Thereby 'indefinite' of an interpretation means that – another meaning is not on hand – there is a property with one of the inventive concepts defining this interpretation of which it is not clear whether "it is there" or not, making this inventive concept and with it this interpretation of the claim(ed invention) ambiguous.

In addition to the properties of the compound inventive concepts, evidently any inventive concept is part of up to ten FSTP test.o and hence has up to 10 such properties – which may be different in different interpretations, if there are more than a single one, which often is the case in model based inventions, as typical for emerging technologies. All these properties may be disclosed in a way by the specification such that the above question for its "being there" arises. Thus, any such property may be the resource of "its" interpretation's indefiniteness/ambiguity.

This shows that it is wrong to assume, as [50-53] often do, that indefiniteness of a claim(ed invention) is mono-causal.

Thus, for model based claim(ed invention)s their "**interpretation specific**" analysis is indispensable, while for MoT based ones, *Bilski*, this particular view on them seems to make no sense. This view is tightly related to the above questions I and II is shown by the two just compared tests, as both talk about several/all possible interpretations.

Both tests try to find out – for a claim(ed invention), disclosed by the specification of a patent (application), though both tests under different premises, as explained also above – whether there is still "**residual ambiguity**" after having removed as many initially seemingly existing ambiguities as possible from an initial alleged interpretation of this claim(ed invention) by disaggregating the latter, by using any ambiguity where feasible, into then "**tentatively**" SPL satisfying interpretations of this claim(ed invention).

If a so defined residual ambiguity exists in any SPL satisfying interpretation, both tests would denote this claim(ed invention) to be "**insoluble ambiguous**". This means that there is not a single allegedly SPL satisfying interpretation of this claim(ed invention), which would not contain an ambiguity – and hence fail its SPL test, i.e. would indeed not satisfy SPL. I.e.: Ambiguities with non-SPL-satisfying interpretations are irrelevant.

The FSTP-Test finds out, whether no such SPL satisfying interpretation exists, otherwise even all interpretations satisfying SPL, of this claim(ed invention). The 'insoluble ambiguity' test is incapable of both such positive statements (see iii)).

v) For leveraging on this interpretation specific view at claim interpretation, these interpretations must be identifiable. The simplest way of identifying a

SPL tentatively or truly satisfying interpretation of this claim(ed invention) is to use as its identifier this interpretation's "**generative inventive concepts set, GICS**", being the set of inventive concepts used in this interpretation. It results from filtering out by the FSTP-Test all sets S in FSTP test.1 to FSTP test.10. Those which passed FSTP test.10 are the GICSes identifying interpretations.

The inventive concepts – input by the user – on the top level of FSTP test.1, if compound, would be disaggregated by it into logically equivalent conjunctions of BED inventive concepts, and output to FSTP test.2, as resulting from test.1[8)9)].

---

[8] Thereby this Amicus Brief, just as any preceding one, does not yet address the question whether only one of both, the claimed invention or the claim claiming it, may be indefinite. Considering also § 112(6), the CAFC has decided in *Noah* that this may occur.

[9] It were worthwhile noticing that "construing the claim construction for a claimed invention" – i.e. performing "claim interpretation" of the claim claiming this invention (see Section II) – does not mean testing of the claimed invention its feature/limitations (since *Mayo* especially its 'inventive concepts', being much more concise versions of these classical 'features/limitations' [19,18,7]) only separately, one after the other, as to their satisfying § 112. I.e., the claim construction is not only a feature/limitation wise resp. inventive concept wise analysis of a claim(ed invention)[8)].

But, "construing the claim construction for a claim(ed invention)" means and has ever meant – though often not noticed, as referring to a complex five parties relation, due to its fundamentality not being bothered for in every day patent business life – establishing the <u>whole</u> "claim construction" for this claim(ed invention)[8)]. In other words, "construing the claim cons-

truction for a claim(ed invention)" means, more explicitly, putting-up from the invention's elementary building blocks – being its features/limitations resp. inventive concepts – the complete mental construct representing the invention created by an inventor (1) and being claimed by the patentee (2) by this claim, whereby this claim moreover claims granting by the USPTO (3) patent protection for the so represented invention. The latter claim is to be approved by the USPTO if and only if this mental construct alias this so represented claim(ed invention) meets the requirements stated by the US (4) in terms of its law (here: 35 USC SPL) as interpreted by this Court (5).

Hence, this mental construct alias this so represented claim(ed invention) alias its so designed claim construction got to be construed such that eventually the final decision maker, this Court, is enabled by it to decide about the claim(ed invention)'s patent-eligibility and patentability and communicate it to the public by means of it.

Consequently, this mental construct alias this so represented claim(ed invention) alias its so designed claim construction got to be concise and complete [18,19,25]. Thereby only this Court (and its subsidiary courts, first of all the CAFC) are entitled to de novo construing the claim construction.

In its *Markman/KSR/Bilski/Mayo/Myriad* line of decisions, this Court has ex- and/or implicitly requested and explained repeatedly a so designed claim construction. This is to be construed from the specification of the patent representing this patent protection granted (for an application: applied for). These requests by this Court evidently culminated in *Mayo*.

Given this evident – for not to say: only reasonable – interpretation of the term 'claim construction', in particular in the light of *Mayo* , it is grossly misleading that phrases are widely used, such as "construing a

claim" instead of correctly saying "construing the claim construction for a claim", or even worse "construing the claims" of an invention ..... At the point in time, when a claim construction is to be construed, the claim(s) is/are) cannot be construed anymore, as they then exist already. By contrast, such sloppy wordings are often understood as justifying to apply [56] the allegedly "broadest reasonable interpretation" to a claim – not to a claim(ed invention)!!! I.e., completely ignoring the invention in this BRI application [45,21,37]!!! – thus indeed construing/fabricating new claim(s).

This complete SPL test, e.g. by the FSTP-Test, is often much more limiting the claim(ed invention) than some alleged "claim limitations" for this invention, which are fabricated/constructed in "free-style" – in particular by just leaving away [18,19,25] some tests from construing the refined claim construction, thus rendering such obscure test legally definitively flawed – for somehow complementing its classical claim construction such that both, the classical claim construction together with this free-style complement, look like establishing the claimed invention's complete SPL test. Such pretense thus is legally untenable.

II. NOTIONAL DEFICITS IN A CONFLICT ABOUT A CLAIM'S (IN)DEFINITENESS

Section I has explained the main cause for a conflict as to a claim's (in)definiteness[8] – namely not construing for the invention it claims the refined claim construction. It has also shown that an (in)definiteness conflict and with it the legal questions I and II could equally be raised due to several other terms/notions of SPL than those immediately affecting the (in)definiteness property of a claim (checked by FSTP test.1/test.7), but capable of rendering the claim (in)definite[4]. The following elaborations are representative also for such other (in)definiteness causes, without delving into them – but returning to this very substantial threat in the CONCLUSION.

Finally, an (in)definiteness conflict about a claim may also be caused and/or amplified by notional deficit. Namely, within a usual claim notionally a linguistic legal question overlays a pragmatic legal question, both of them not completely understood as based on defective notions, as demonstrated by [50-53] and explained below. These questions are:

A) "Up to what complexity of the wording of a claim is it as clear as required by § 112(2)?", overlaying

B) "What is a claim in 35 USC exactly?".

Section II answers both questions such that this reply is indisputably

- consistent to today's SPL precedents and notionally in line with Advanced IT/Mathematics, and
- preventing the threatening (in)definiteness cases mentioned above based on defective notions. Some of them have already come-up [52.p12/13], the *Noah* case, two weeks ago the *LBC* case, ...

The briefs of the here involved parties and Amici Curiae [50-53] explicitly struggle about question **A)**, only implicitly address question **B)**, and none of them recognizes this overlay of two hitherto not yet clarified mongrel questions. The Subsections IIA) and IIB) provide both respective clarifications.

IIA): Question A) is subject to the limitation that a claim's wording and its written representation uses natural language. Hence a quite usual invention cannot be specified in detail by the single sentence of a claim without making it incomprehensible, unless it is 'semantically extended', i.e. this sentence is enriched by terms representing functions[11].

This is demonstrated by the real-life claim 68 (already discussed in [45]) in normal, i.e. so functionally enriched English knowledge representation ("KR"). A pretty similar claim 68° is also shown below[10], yet as detailed specification and hence in much less functional KR, i.e. much more verbose, as typical for patents' specification sections – whereby, for brevity, this less functional KR of the claim 68 replacement does not yet contain all binary elementary disclosed (BID) inventive concepts making-up the claim(ed invention) by claim 68. Although, it contains the 4 inventive concepts discussed in [45].

It is evident: Claim 68° is far too long to be easily comprehensible by the posc[15]. As not worthwhile reading it, it is left in German.

I.e.: Already the so reduced complexity of claim 68° shows that grasping its working is in natural language KR much more complicated than in normal KR. Not only must it use about 3 times as many words – their word counts are 181 and 553. What is even worse: The logical structure of the less

functional KR is too complicated. Both rendering this KR totally useless.

Hence, common sense requires from a claim's normal KR (and therein from the invention it claims) to use terms/notions representing functions semantically so powerful[12] that the posc may easily grasp this invention's principle working[11]. This is the answer to the above question A).

For such a "high level semantics" claim, the problem arises whether the function(s) it quotes is(are) definite – as all briefs [50-53] correctly noticed. Even if it were definite, this would not tell whether the invention it claims[8] passes its SPL test.

Answering this question requires construing a refined claim construction[9] for this claim(ed invention) – i.e. applying the FSTP-Test to it, as explained in [25,18,19] and here in Section I – which comprises deciding its definiteness.

The above answer to question A) thus is safe.

Therefore, there is no justification for assuming, a claim is definite only[2] if the pertinent posc is able to recognize "at its face" what exactly a claim technically tells to it, i.e. without investing a decent amount of effort into precisely understanding it [50-53]. But, as usually practiced, a claim as such need to enable the posc only to quickly grasping its principle working, not enable it to decide its (in)definiteness. The latter cannot be tested separately, anyway[9], as explained in [18,25] and reminded in Section I: As shown there, for the SPL test of many claim(ed invention)s, especially model based ones, construing the refined claim construction for them is

necessary, which includes deciding its (in)definiteness[10)11)12)].

---

[10] The normal KR of claim 68

68. Switching apparatus for selectively routing a telephone call from a first end terminal to a second end terminal, comprising:

- a device that provides access to a packet switching network through which data can be sent for delivery to the second end terminal;
- means for transferring first data of the telephone call originated by the first terminal through the packet-switching network for delivery to the second end terminal;
- a device for establishing a connection to a line-switching network through which data can be sent for delivery to the second end terminal;
- means for transferring second data of the telephone call originated by the first terminal over the connection through the line-switching network for delivery to the second end terminal; and
- means responsive to a control signal for changing-over from a packet-switching mode of transfer of the first data of the telephone call to a line-switching mode of transfer of the second data of the telephone call without
  - interruption of a call-up procedure, wherein
  - said control signal is produced by a network management system.

(*word count = 181*)

The less functional KR of the pretty similar claim 68°

The difference between the above and the below KR of this claim is: The former is located on a "high functional level", while the latter replaces all functions by their algorithmic implementations as disclosed by the specification, common to claim 68 and claim 68°.

68° „Verfahren zur Übertragung von Daten von einem ersten zu einem zweiten Switch, erster geeignet für:
- die Datenübertragung

.....
.....
.....
.....
.....
.....
.....

All the middle part is skipped, In total, the full version of claim 68° comprises more than 550 words and is 3 pages long.

.....
.....
.....
.....
.....
.....
.....

  - o anfangs um paketvermittelte Anruf-Datenübertragung zu ermöglich bzw.
  - o später um deren Wechsel auf Leitungsvermittlung zu ermöglichen."

11 For the pertinent posc[16] just as in Advanced IT a 'function' is immaterial. It exists only intellectually. It reduces the working of an algorithm implementing it – doing something stepwise – to just the I/O behavior of its execution. I.e., and without going into details: A deterministic algorithm defines its function uniquely, while the opposite does not hold, as for any function there is an infinite number of different algorithms defining it.

A simple example is the commonly known function "add", e.g. "add(1,1) = 2". It may be implemented by infinitely many algorithms, any one defining it, e.g. by n=1,2,3,... algorithms working as follows:

"add(1,1) := 1 + n*(1/n)".

Any such algorithm consists of 3 algorithmic steps, with 2 steps being different for different values of n. I.e.: All n algorithms are different from each other.

Hence, it is untenable to assume – as often done in [50-53] – that a function in a claim is indefinitely specified, •) if more than one algorithm exists implementing it (as these always exist, for considering only disclosed ones see IIB)), or •) if not all algorithms implementing it are disclosed by the specification (which never is possible as there always is an innumerable number of such algorithms).

[12] This use of the term "function" requires an explanation, as it evidently contradicts the simple but popular [55] hear-say "Functional claiming is inadmissible" as making the claim[8)] indefinite. This is an oversimplification: A correct statement were: "Non-enabled functional claiming is inadmissible, enabled functional claiming is unavoidable for clarity" – the latter not replacing construing for the claim(ed invention) its refined claim construction.

IIB): Question B) addresses a "**patent monopole granting pragmatics, pmgp**" based notional deficit of today's SPL precedents, not a natural language based such deficit as underlying question A).

Answering question A) has shown: By its implied refined claim construction, *Mayo* also paves the legal way for overcoming the hitherto lingering linguistically caused antagonism existing between •) improving the simplicity/clarity of claims' wordings by appropriately increasing the semantic power of the terms/notions therein[10], and •) testing these claim(ed invention)s using terms of "high level semantics" for satisfying SPL.

Question B) addresses no notional legal problems resulting from deficiencies of using natural language in claims' wordings, but a notional legal confusion to be removed, resulting from a broad gap in SPL precedents as to emerging technology, more generally, as to model based claim(ed inventions). Recognizing this gap and how to remove it again is legally enabled by *Mayo* – and only by its removal insights become available, without which the above questions I and II cannot be answered seriously.

To start with: Question B), what under 35 USC the terms 'claim' and 'scope' ought to mean at all, has no simple answer as the only 2 simple definitions of the semantics of a claim's scope cannot be – due to the below causes, i.e. their resp. pmgp's –

- the set of all patent-eligible embodiments of the properties of the claim(ed invention). Namely: Then the scope of this claim would comprise all patent-eligible potential inventions characterized by limitations additional to those disclosed by its specification. This claim then were defined to be

preemptive and therefore not patentable – due to pmgp properties *Mayo* requires.

- a finite subset of this just defined set of this claim(ed invention). Namely: This were, with most claims, nothing else but an invitation to "invent around" them – as known from "legalizing" illegal software systems. Thus, such a definition of the notion of 'scope' of a claimed invention would often completely devaluate this claim and the whole US patent system. It hence would contradict the most fundamental property any pmgp has, as all pmgp's strive for unfolding/preserving the value of SPL.

Consequently, more complex semantics of appropriate pragmatics (more precisely: pmgp) – as compared to these two meanings – of the terms 'scope' and 'claim' of a claim(ed invention) is unavoidable. As explained in Section I in principle and shown below in more detail, the definition of these more complex semantics of a claim(ed invention)'s claim and scope under 35 USC is possible iff this claimed invention is qualified by one of its finitely many generative inventive concepts sets.

Due to the objectives of any pmgp, the below suggested definitions of the notions 'claim' and 'scope' will eventually prevail, after been approved by this Court – or even been set by this Court, as in *Mayo*.

At the time being, [50-53] demonstrate that exactly the just excluded two definitions of the meaning of the term 'claim' are assumed in their arguing about what •) features determine the (in)definiteness of the invention it claims, •) (in)definiteness test is feasible in terms of pmgp, •) the legal status is of the CAFC's "insolubly ambiguous" such test, •) the allocation should be of what SPL

decision power to the CAFC resp. to a district court (see in the recent LBC decision by the CAFC), •) .... These assumptions confuse such arguing of [50-53] even more than it is anyway – due to its total ignoring of *Mayo*.

The way out is paved by *Mayo* , again by its notions "inventive concepts"[13] and "nonpreemptiveness"[14]. These new notions enable the key insights, impossible *pre-Mayo*, into the subtleties of SPL for finding the below definitions of the semantics of appropriate pmgp of the terms 'claim' and 'scope' such that they meet – while avoiding both of the just explained traps – all the requirements of everyday patent business, in particular when dealing with model based inventions.

The strengths of these definitions of the notions 'claim' and its 'scope' – still customizable for the Highest Courts' needs by a dozen of their parameters (here left implicit) for following the Highest Courts' development of SPL precedents – are briefly indicated by the below items i)-viii), after defining both notions, next.

Both notions need not be defined for an invention not passing its SPL test, i.e. its FSTP-Test. Thus, in the below elaborations any claim(ed invention) satisfies SPL.

Moreover, just as in Section I, the below elaborations cannot be presented/grasped completely, as this needs theoretical work [7,5], not fitting here.

Nevertheless, the sketches i)-viii) of some implications of the below definition(s) should suffice for communicating convincingly, what groundbreaking insights into the power and subtlety of 35 USC SPL – as necessary for patenting emerging technology inventions (see below) – *Mayo* indeed has enabled.

The notion of the 'scope' of the claim claiming a so qualified invention is:

> "For an invention and a generative set of its inventive concepts, the meaning of the term 'scope' of a claim is defined to be the set of all embodiments of exactly all its properties protected by SPL."

Thus, this is the SPL semantic alias meaning of the terms 'its scope'. It depends on the invention's generative inventive concepts set.

The definition of the notion of its 'claim' follows immediately from this definition of 'scope':

> "For an invention and a generative set of its inventive concepts, the meaning of the term 'claim' is that it claims the so identified scope."

Thus, this is the SPL semantic of the terms 'its claim'. I.e.: A claim of a patent (application) may claim different scopes of protection by SPL.

The same as for its claim holds for the definition of the notion of its 'interpretation':

> "For an invention and a generative set of its inventive concepts, the meaning of the term 'interpretation', interpreting the so qualified invention, is defined to be its scope."

Thus, this is the SPL semantic of the terms 'its interpretation'. The interpretation of a so qualified claimed invention and its claim is defined by what it yields, i.e. its scope – both being different for different generative inventive concepts sets.

As mentioned above, there are substantial cognitions enabled by these definitions, showing the power of *Mayo* interpreted SPL. These are trustworthy, as mathematically rigorous. This does not

render these elaborations academic "l'art pour l'art" – it indicates the *Mayo* induced clarity achievable about SPL, indispensable for eliminating the confusions created by wishful SPL interpretation [50-53].

Several of such cognitions based on these definitions are sketched by i)-viii). Some of them also show that these cognitions clearly falsify erroneous legal statements about SPL in [50-53], allegedly justifying the questions I and II at issue – as they are not justifiable, legally at least.

i) **Emerging technologies need this power and subtlety of SPL**: This shows the chemical compound Dimethylfumarat. It has originally been developed and patented as a drug curing skin diseases and only recently has been detected to reduce also Multiple Sclerosis – in the US marketed under the product name Tecfidera – and another patent for this new usefulness (in EPC 'problem solution') has been issued. The same is utmost likely to occur e.g. with the "BRCA genes".

I.e.: SPL protection of such claim(ed invention)s must be grantable precisely as to their enablingly disclosed usefulness.

To put it generally: Patent protection for model based claimed inventions need this power and subtlety of 35 USC SPL, as otherwise many if not most patents granted to them would prove as being preemptive, what *Mayo* explicitly required to be avoided – and this applies for probably all emerging technology areas. This were especially disastrous for the life science based new technologies with their inevitably huge research funds.

ii) **More on multiple interpretations**: By 35 USC SPL, for a claim(ed invention) there are as many

different scopes alias claim interpretations as there are generative inventive concept sets for it.

Thus, it is wrong to assume an invention and/or its claim were indefinite just because of these several different interpretations for them.

In other words: Interpreting a claim(ed invention) with multiple generative inventive concepts sets and not identifying exactly which single one of them is used in this interpretation, inevitably causes the confusion discussed here and underlying the above two questions I and II, as put forward by this Court.

I.e.: If there are n different interpretations for a claim(ed invention) – and all terms other than inventive concepts used in these n interpretations have the same meanings – then this indicates that this invention's specification discloses n generative inventive concept sets of the claimed invention (which implies disclosing by it n different kinds of usefulness) with n different scopes of its claim, but not this claim(ed invention)'s indefiniteness. Nothing is wrong with a claim(ed invention) having n clearly defined scopes derived from n clearly defined interpretation rules, being the claimed invention's n generative inventive concepts sets. Of the main SPL problem thus potentially arising – that of potentially double patenting an invention – is shown by iii) that it does not exist.

Finally: The "multiple broadest reasonable interpretation" test of claim(ed invention)s [50,52,53] cannot indicate their indefiniteness – even if one ignored that already this test's base, the BRI test [14], is legally absolutely untenable [21,37,45].

iii) **No preemptive and no double patenting**: If the preceding paragraph holds for a claimed invention,

the total usefulness of the claim(ed invention) may be the same in its generative inventive concepts sets (in EPC terms, the n inventions then resolve the same problem) or not (in EPC terms, the n inventions then resolve different problems). In both cases, all generative inventive concepts sets are different from each other.

If a patent is granted for exactly one generative inventive concepts set of a claim(ed invention), then it does not preempt and is not preempted by such a patent for another generative inventive concepts set of this same claim(ed invention).

And accordingly, two such patents for a so understood claim(ed invention) evidently represent no double patenting for it.

At the latest at this point, when discussing two patents granted and based on the same claim(ed invention) – as solving the same problem by different procedures, or solving different problems by very similar procedures, or both – one sees that the qualification of a claim(ed invention) by its generative inventive concepts set is just explicitly naming the pmgp reason why this is possible.

Covering a single claim(ed invention) by several patents without exerting double patenting has actually been possible by some time already. The above definitions hence only make explicit a view at SPL that has been lingering in the background for a while, already, and has since then caused confusion, such as expressed in [50-53].

iv) **The non-existence of an isolated (in)definiteness test**: Although this is boring already, for many today's patent practitioners this message probably will still remain shocking, inacceptable – they will remain yearning for a cookbook recipe as to decide

about a claim(ed invention)'s e.g. (in)definiteteness, and refuse to believe that this does actually exist but requires a slightly higher reading capability, as required by *Mayo*. The reason therefore has been explained several times, in Section I as well as e.g. in [45,25].

v) **The CAFC's "insoluble ambiguous" test for claim/claimed invention indefiniteness**: Its correctness explained already in the wake of explaining the working of the FSTP-Test is consistent with this *Mayo* implied refinement of the understanding of 35 USC SPL. It evidently got to be applied separately for the various generative inventive concepts sets – if there are several ones.
As indicated in Section I, a perfect execution of the 'insoluble ambiguity' test eventually is nothing else but an execution of the FSTP-Test.

vi) **Infringement/Equivalence**: These notions of 'scope', 'claim', and 'interpretation' implied by *Mayo's* interpretation of the 35 USC SPL, which clarified its actual subtlety and power, provide by their preciseness (they are even apt for being mathematically modelled [5,25,47]) a much better basis for analysing in an unquestionable and very transparent manner infringement/equivalence problems – just as an X ray system may do with a broken or just inflamed bone or a MRT system with an aneurysm in the brain.

vii) **Decision support**: This interpretation of US SPL and these notions of 'scope', 'claim', and 'interpretation' – in the foreseeable future probably then with all national patent systems, worldwide – would be part of the basis of any smart 'patent expert system', e.g. of the IES [46,47,7,11,32,43,46,47].

viii) All above elaborations also hold for all claim(ed inventions) with only as single generative inventive concepts set, trivially.

These necessities/pragmatics represented by the SPL in 35 USC, as interpreted by this Court's *Mayo* decision, provide a scientific and political frame comprising a multitude of unresolved SPL problems for resolution by the law makers and this Court, when further developing the SPL, in particular as to emerging technologies' needs – especially when elaborating on the vague legal notions identified in Section I in the wake of outlining the FSTP-Test[13)14)15)].

---

[13] **The *Mayo* Term "Inventive Concept"** as understood by *Mayo*[3)-6)] (see also [6.ftn4,18]), are the incremental units of the claimed invention's total usefulness. Separating them from each other – after disaggregating the compound inventive concepts of the elements of the claimed invention into their respective conjunctions of independent of each other elementary inventive concepts – enables separating, for any claim(ed invention), its patent-eligible from its non-patent-eligible elementary inventive concepts. This fundamental *Mayo's* requirement is to be met by any claim(ed invention)'s claim construction.

[14] **The *Bilski/Mayo* Term "Abstract Idea"** is explained in [18,19] also as to its representation of the patentability killing notion of 'preemptiveness' of a claim(ed invention).

[15] "**posc**" stands for "**person of ordinary skill and creativity**" [57], an important clarification of the interpretation of 35 USC § 103, provided by this Court in *KSR*.

CONCLUSIONS

Up-front: *Mayo* vastly facilitates SPL precedents by enabling Advanced IT [2-4] to support it. Here e.g., in grasping the key issues embodied by the above questions I and II, being: How to deal with (applications for) patents for emerging technology inventions, as these are no longer tangible or only visible, but plainly intellectual models based, thus here overstraining the current patent system.

These by *Mayo* enabled perspectives of SPL precedents, irrelevant for short-term business, fail to interest most patent practitioners, at least hitherto.

However, the *MARKMAN/KSR/Bilski/Mayo/Myriad* line of decisions of this Court shows that it considers its charter to be to support, also in this "innovation age", sustainable success of the US economy and that it believes the best way to achieve this objective is to increase, within 35 USC, scientific rationality in US SPL precedents. Indeed, tying SPL precedents tighter to the "intellectual constant" called "scientific rationality" would reduce impacts on it broadly recognized [16] and feared by long-term investors.

Mayo is an exemplary and big step towards this objective: The requirement it implies, of construing for an emerging technology invention a refined claim construction, defines first time what exactly is meant by "its indefiniteness" or "testing it under SPL". The scientification of SPL precedents this Court thus initiated, provides the basis for enabling any innovation driven enterprise to manage its "creativity" business activities as transparently/reliably as its other established business activities, e.g. in the business areas of ERP, CRM, or US GAAP.

This leads to the below conclusions, comprising the answers to the above questions I and II:

- While it today may be inconvenient for many US patent practitioners, enforcing the rationality/scientification of SPL precedents required by *Mayo* is not only worthwhile but necessary – for sake of sustainable economic success of the US.
- This means confirming the *Mayo* implied requirement, to construe for a claimed invention its refined claim construction as its SPL test.
- Specifically as to questions I and II: The CAFC test for indefiniteness of a claimed invention is a functional and hence non-executable specification of a part of what the meaning is of "construing for it the refined claim construction".

  This means ad I: The CAFC test does not conflict but is in line with this Court's precedents, especially with *Mayo* – disabling the Petitioner of showing the contrary – and ad II: Therefore the CAFC did not err in interpreting 35 USC § 282.
- The completely executable FSTP-Test actually does construe for it this refined claim construction as it is nothing else but the algorithm (scheme) implementing the requirements stated by Mayo for its necessary and sufficient testing for its satisfying US SPL as interpreted by this Court.
- The USPTO's position as to the CAFC's "insoluble ambiguous" test may be read as confirming much of the just said, yet without referring to Mayo. Just as its *Mayo* guidelines ignore *Mayo's* new terms/notions "inventive concept" and its relation to testing its "preemptivity"; that for § 282 doesn't

mention *Mayo* that recommending claims' "Broadest reasonable interpretation" is untenable [45]: They all need updates to align them with this Court's requirements, just as those of the CAFC. This Court should find a way via the CAFC to remove stumbling blocks for the unfolding of innovation activities – such as this unfortunate (in)definiteness debate and its above questions I and II.

- And more alike wild-goose chasing cases will arise, to change the US SPL precedents in favor of whatever major parties just feel fit for, unless this Court puts an end to the evidently topical feeling that anything might go – as demonstrated by the case underlying this invitation of Amicus Briefs.

  The most efficient way to achieve this probably is to tell the community of patent business practitioners by this Court – quite similar as it did it in its Mayo decision – that, while in the past SPL and its precedents had nothing to do with IT, the situation has changed: With the ever growing economical importance of innovations of all kinds for the US society and their rapidly increasing scientification, patents in emerging technologies – vastly developed in the US – deserve and urgently require Advanced IT potentials to be used for supporting them by this community for their most efficient management and usage. That the intellectual level of such patent business and its level of complexity is too high for this community – as already indicated in the most recent brief in this case – is no excuse: These levels are still far below those of accounting systems of public companies.

A little bit of new professional qualification will suffice for the patent business community, comparable to what getting a driver's license has cost – not due to *Mayo*, but caused by what protecting emerging technology inventions requires.

- This Court should encourage, by its decisions in the pending cases, the initiatives recently launched by the White House [54] and the USPTO [55] by confirming, what the IPO [56] has put beautifully by its slogan taking them programmatically:

> *"Patent Claim Limitations Construed According to Claims, Specification, and Prosecution History, not 'Universally Accepted Meaning' ".*

One of this Court's responsibilities is to ensure that such 'universally accepted meanings', here within the patent business community, should not impede the pioneering spirit of the US, but encourage it by adjusting SPL precedents for leveraging on inventions especially in emerging technologies.

In total: *Mayo's* slight raising the intellectual bar – by its *Mayo* interpretation of the SPL in 35 USC – for patent applications, examinations, and interpretations, and for up-front drafting them, has proven very productive. It is about to provide to judges, inventors. investors, patent lawyers, the USPTO, and the public much more certainty about the US SPL and patent protected inventions than possible *pre-Mayo*, in particular as to claimed inventions in emerging technology areas.

This Court should leverage on the dynamics it thus created, as stated by the above IPO slogan, for increasing by its consistent decisions making, along

the line of its *KSR/Bilski/Mayo/Myriad* decisions, also the confidence in and hence the appeal and attractiveness of the research communities, as well as the social standing of sponsors of and investors into sustainable research business. This is the best guarantee for also the economic resilience provided by the US patent system to the US society.

Respectfully Submitted,

Chidambaram S. Iyer
Sughrue Mion, PLLC
2100 Pennsylvania Ave, NW
Suite 800
Washington, DC 20037
Tel: (202) 293-7060
c.iyer@sughrue.com
Attorney for
Sigram Schindler Beteiligungsgesellschaft mbH

AMICUS CURIAE BRIEF

RECORD
AND
BRIEFS

No. 13-369

Supreme Court, U.S.
FILED
MAR - 3 2014
OFFICE OF THE CLERK

IN THE

Supreme Court of the United States

NAUTILUS, INC.,
Petitioner,
v.
BIOSIG INSTRUMENTS, INC.,
Respondent.

On Writ of Certiorari to the United States Court of Appeals for the Federal Circuit

BRIEF OF YAHOO! INC. AS *AMICUS CURIAE* IN SUPPORT OF REVERSAL

JOHN M. WHEALAN
4613 Merivale Road
Chevy Chase, MD 20815
(202) 994-2195

KEVIN T. KRAMER
Deputy General Counsel – Intellectual Property
YAHOO! INC.
701 First Ave.
Sunnyvale, CA 94089
(408) 349-3044

JEFFREY A. LAMKEN
Counsel of Record
MARTIN V. TOTARO
MOLOLAMKEN LLP
The Watergate, Suite 660
600 New Hampshire Ave., NW
Washington, D.C. 20037
(202) 556-2000
jlamken@mololamken.com

KAITLIN R. O'DONNELL
MOLOLAMKEN LLP
540 Madison Ave.
New York, NY 10022
(212) 607-8160

Counsel for Amicus Curiae

WILSON-EPES PRINTING CO., INC. – (202) 789-0096 – WASHINGTON, D.C. 20002

Library of Congress
Law Library

QUESTION PRESENTED

Section 112, ¶2, of Title 35 of the U.S. Code provides that a patent application must include claims that "particularly point[ ] out and distinctly claim[ ]" the subject matter of the patentee's invention. The question presented is:

Whether Section 112, ¶2, obligates patentees (a) merely to avoid a claim that is "insolubly ambiguous," as the Federal Circuit has held; (b) to assert a claim that has no ambiguity of any sort, as others have urged; or (c) to include a claim that *reasonably* informs those skilled in the art about the metes and bounds of the invention at the time the patent is granted.

TABLE OF CONTENTS

	Page
Interest of *Amicus Curiae*	1
Summary of Argument	3
Argument	5
I. Neither the Federal Circuit's "Insolubly Ambiguous" Standard Nor a Zero-Ambiguity Standard Is Correct	6
A. The Federal Circuit's "Insolubly Ambiguous" Standard Is Incorrect	6
1. For Centuries, This Court and Congress Have Required Patent Claims To Distinguish the Invention from Prior Art and Provide the Public with Appropriate Notice	6
2. The "Insolubly Ambiguous" Standard Defies the Text and the Public-Notice Function That the "Definiteness" Requirement Serves	9
3. The "Insolubly Ambiguous" Standard Undermines the Judicial Role	11
4. The "Insolubly Ambiguous" Standard Creates Improper Incentives To Draft Vague Claims	13
B. The Proposal That *Any* Ambiguity Invalidates a Patent Is Also Incorrect	15
1. A Zero-Ambiguity Standard Defies Precedent	16

TABLE OF CONTENTS—Continued

Page

2. A Zero-Ambiguity Standard Would Wreak Havoc by Invalidating Patents for Failing To Achieve the Unachievable 18

II. The Proper Interpretation of the "Definiteness" Requirement Focuses on Reasonableness 20

A. The "Definiteness" Requirement Must Balance the Interests of Inventors and the Public 21

B. The Proper "Definiteness" Standard Incorporates Reasonableness, and Thereby Tolerates Some Ambiguity in Patent Claims 22

1. This Court Has Long Used a Reasonableness Standard To Evaluate Patent Claims 22

2. The Reasonableness Standard Properly Balances the Interests the "Definiteness" Requirement Is Designed To Serve 25

3. The Law Provides Guidance for Assessing Whether Claim Language Reasonably Informs Persons of Ordinary Skill in the Art of the Metes and Bounds of the Invention 27

4. Other Areas of the Law Reflect Similar Principles 29

Conclusion 31

TABLE OF AUTHORITIES

Page(s)

CASES

AFG Indus., Inc. v. *Cardinal IG Co., Inc.*, 239 F.3d 1239 (Fed. Cir. 2001) 16

All Dental Prodx, LLC v. *Advantage Dental Prods., Inc.*, 309 F.3d 774 (Fed. Cir. 2002) 11

Andresen v. *Maryland*, 427 U.S. 463 (1976) 29

Application of Bosy, 360 F.2d 972 (C.C.P.A. 1966) 25

Atmel Corp. v. *Info. Storage Devices, Inc.*, 198 F.3d 1374 (Fed. Cir. 1999) 12

Autogiro Co. of Am. v. *United States*, 384 F.2d 391 (Ct. Cl. 1967) 18

Bancorp Servs., L.L.C. v. *Hartford Life Ins. Co.*, 359 F.3d 1367 (Fed. Cir. 2004) 10, 11

Bates v. *Coe*, 98 U.S. 31 (1878) 9

Bilski v. *Kappos*, 130 S. Ct. 3218 (2010) 19

Bright Response, LLC v. *Google Inc.*, No. 2:07-CV-371, 2010 WL 2522424 (E.D. Tex. June 18, 2010) 14

Burlington Indus. Inc. v. *Quigg*, 822 F.2d 1581 (Fed. Cir. 1987) 17

Cameron v. *Johnson*, 390 U.S. 611 (1968) 23

Claude Neon Elec. Prods. v. *Brilliant Tube Sign Co.*, 48 F.2d 176 (9th Cir. 1931) 25

Corwin v. *Marney, Orton Invs.*, 788 F.2d 1063 (5th Cir. 1986) 31

Diamond v. *Diehr*, 450 U.S. 175 (1981) 24, 25

Dickinson v. *Zurko*, 527 U.S. 150 (1999) 13

TABLE OF AUTHORITIES—Continued

Page(s)

Dolbear v. *Am. Bell Tel. Co.*, 126 U.S. 1 (1888) 24, 25

Ebeid ex rel. United States v. *Lungwitz*, 616 F.3d 993 (9th Cir. 2010) 30

Eibel Process Co. v. *Minn. & Ontario Paper Co.*, 261 U.S. 45 (1923) 23, 24

Energizer Holdings, Inc. v. *Int'l Trade Comm'n*, 435 F.3d 1366 (Fed. Cir. 2006) 11

Evans v. *Eaton*, 20 U.S. 356 (1822) 7, 8

Ex Parte Miyazaki, 89 U.S.P.Q.2d 1207, 2008 WL 5105055 (B.P.A.I. Nov. 19, 2008) 16, 17

Exxon Research & Eng'g Co. v. *United States*, 265 F.3d 1371 (Fed. Cir. 2001) 2, 6, 25

FTC v. *Actavis, Inc.*, 133 S. Ct. 2223 (2013) 22

Festo Corp. v. *Shoketsu Kinzoku Kogyo Kabushiki Co.*, 535 U.S. 722 (2002) 21, 25, 26

Gen. Elec. Corp. v. *Wabash Appliance Corp.*, 304 U.S. 364 (1938) 9, 15

Graver Tank & Mfg. Co. v. *Linde Air Prods. Co.*, 339 U.S. 605 (1950) 19

Halliburton Energy Servs., Inc. v. *M-I LLC*, 514 F.3d 1244 (Fed. Cir. 2008) 17

Hughes Aircraft Co. v. *United States*, 717 F.2d 1351 (Fed. Cir. 1983) 19

In re Am. Acad. of Sci. Tech. Ctr., 367 F.3d 1359 (Fed. Cir. 2004) 17

In re Buszard, 504 F.3d 1364 (Fed. Cir. 2007) 18

In re Cohn, 438 F.2d 989 (C.C.P.A. 1971) 27

In re Yamamoto, 740 F.2d 1569 (Fed. Cir. 1984) 18

TABLE OF AUTHORITIES—Continued

Page(s)

In re Zletz, 893 F.2d 319 (Fed. Cir. 1989) 17

Kearns v. *Ford Motor Co.*, 567 F.3d 1120 (9th Cir. 2009) 30

Keystone Bridge Co. v. *Phoenix Iron Co.*, 95 U.S. 274 (1877) 8

Markman v. *Westview Instruments, Inc.*, 517 U.S. 370 (1996) 8, 16, 19

Maryland v. *Garrison*, 480 U.S. 79 (1987) 29

McClain v. *Ortmayer*, 141 U.S. 419 (1891) 21, 26

Merrill v. *Yeomans*, 94 U.S. 568 (1876) 9

Minerals Separation v. *Hyde*, 242 U.S. 261 (1916) 23

Morgan Stanley Capital Grp. Inc. v. *Pub. Util. Dist. No. 1 of Snohomish Cnty.*, 554 U.S. 527 (2008) 27

Orthokinetics, Inc. v. *Safety Travel Chairs, Inc.*, 806 F.2d 1565 (Fed. Cir. 1986) 27

Permutit Co. v. *Graver Corp.*, 284 U.S. 52 (1931) 9, 25

Pfaff v. *Wells Elecs., Inc.*, 525 U.S. 55 (1998) 21

Power-One, Inc. v. *Artesyn Techs., Inc.*, 599 F.3d 1343 (Fed. Cir. 2010) 19

Praxair, Inc. v. *ATMI, Inc.*, 543 F.3d 1306 (Fed. Cir. 2008) 11

Procter & Gamble Mfg. Co. v. *Ref., Inc.*, 135 F.2d 900 (4th Cir. 1943) 25

Producers' & Refiners' Corp. v. *Lehmann*, 18 F.2d 492 (8th Cir. 1927) 25

Rita v. *United States*, 551 U.S. 338 (2007) 22

TABLE OF AUTHORITIES—Continued

Page(s)

Schumacher v. *Buttonlath Mfg. Co.*, 292 F. 522 (9th Cir. 1920) 25

Scott Paper Co. v. *Marcalus Mfg. Co.*, 326 U.S. 249 (1945) 20

Smith v. *Snow*, 294 U.S. 1 (1935) 19

SRI Int'l v. *Matsushita Corp. of Am.*, 775 F.2d 1107 (Fed. Cir. 1985) 19

Star Scientific, Inc. v. *R.J. Reynolds Tobacco Co.*, 655 F.3d 1364 (Fed. Cir. 2011) 10

Steele v. *United States*, 267 U.S. 498 (1925) 29

Terry v. *Ohio*, 392 U.S. 1 (1968) 23

Therasense, Inc. v. *Becton, Dickinson & Co.*, 649 F.3d 1276 (Fed. Cir. 2011) (en banc) 13

Tilghman v. *Proctor*, 102 U.S. 707 (1880) 24, 25

TSC Indus., Inc. v. *Northway, Inc.*, 426 U.S. 438 (1976) 22

U.S. ex rel. Lemmon v. *Envirocare of Utah, Inc.*, 614 F.3d 1163 (10th Cir. 2010) 31

Union Pac. Res. Co. v. *Chesapeake Energy Corp.*, 236 F.3d 684 (Fed. Cir. 2001) 25

United Carbon Co. v. *Binney & Smith Co.*, 317 U.S. 228 (1942) ..... *passim*

United States v. *Adams*, 383 U.S. 39 (1966) 27

United States v. *George*, 975 F.2d 72 (2d Cir. 1992) 30

United States v. *Mendenhall*, 446 U.S. 544 (1980) 23

United States v. *Soderna*, 82 F.3d 1370 (7th Cir. 1996) 18

TABLE OF AUTHORITIES—Continued

Page(s)

Universal Oil Prods. v. *Globe Oil & Ref. Co.*, 322 U.S. 471 (1944) 15

Warner-Jenkinson Co., Inc. v. *Hilton Davis Chem. Co.*, 520 U.S. 17 (1997) 9

Wellman, Inc. v. *Eastman Chem. Co.*, 642 F.3d 1355 (Fed. Cir. 2011) 11

CONSTITUTIONAL PROVISIONS

U.S. Const. amend. IV 29, 30

STATUTES AND RULES

Act of Apr. 10, 1790, ch. 7, §2, 1 Stat. 109 7

Act of Feb. 21, 1793, ch. 11 §3, 1 Stat. 318 7

Act of July 4, 1836, ch. 357, §6, 5 Stat. 117 7

Act of July 8, 1870, ch. 230, §26, 16 Stat. 198 8

16 U.S.C. §824d(a) 22

35 U.S.C. §112 ..... *passim*

35 U.S.C. §282 13

Fed. R. Civ. P. 9(b) 5, 30, 31

ed. R. Civ. P. 34(b)(1)(A) 30

OTHER AUTHORITIES

Brief for the United States as *Amicus Curiae*, *Applera Corp.* v. *Enzo Biochem, Inc.*, No. 10-426, 131 S. Ct. 847 (2010) 17

Roger Allan Ford, *Patent Invalidity Versus Noninfringement*, 99 Cornell L. Rev. 71 (2013) 12

Doug Lichtman & Mark A. Lemley, *Rethinking Patent Law's Presumption of Validity*, 60 Stan. L. Rev. 45 (2007) 12, 13

TABLE OF AUTHORITIES—Continued

Page(s)

Clarisa Long, *Information Costs in Patent and Copyright*, 90 Va. L. Rev. 465 (2004) 22

Karl B. Lutz, *Evolution of the Claims of U.S. Patents*, 20 J. Pat. Off. Soc'y 134 (1938) 8

Douglas R. Nemec & Emily J. Zelenock, *Rethinking the Role of the Written Description Requirement in Claim Construction: Whatever Happened to "Possession Is Nine-Tenths of the Law?"*, 8 Minn. J.L. Sci. & Tech. 357 (2007) 13

A Panel Discussion: Claim Construction from the Perspective of the District Judge, 54 Case W. Res. L. Rev. 671 (2004) 26

Jason Rantanen, *Patent Law's Disclosure Requirement*, 45 Loy. U. Chi. L.J. 369 (2013) 26

Restatement (Second) of Torts § 283 (1965) 22

Sean B. Seymore, *The Teaching Function of Patents*, 85 Notre Dame L. Rev. 621 (2010) 26

U.S. Patent & Trademark Office, *Manual of Patent Examining Procedure* (8th ed., rev. Aug. 2012) ..... *passim*

U.S. Patent & Trademark Office, U.S. *Patent Statistics, Calendar Years 1963-2013* (2014), http://www.uspto.gov/web/offices/ac/ido/oeip/taf/us_stat.pdf 11

5A Wright *et al.*, *Fed. Prac. & Proc.* § 1291 (3d ed. rev. 2013) 30

IN THE

Supreme Court of the United States

NO. 13-369

NAUTILUS, INC.,

Petitioner,

v.

BIOSIG INSTRUMENTS, INC.,

Respondent.

On Writ of Certiorari
to the United States Court of Appeals
for the Federal Circuit

BRIEF OF YAHOO! INC. AS *AMICUS CURIAE* IN SUPPORT OF REVERSAL

INTEREST OF *AMICUS CURIAE*[1]

Amicus curiae Yahoo! Inc. is a global technology company with over 12,000 employees focused on making the world's daily habits inspiring and entertaining. It provides a variety of products and services, many of them personalized, including search, content, and communications tools on the Web and on mobile devices. *Amicus*

---

[1] Pursuant to Supreme Court Rule 37.6, counsel for *amicus curiae* states that no counsel for a party authored this brief in whole or in part or made a monetary contribution to the preparation and submission of this brief, and no person other than *amicus* or its counsel made such a contribution. All parties consented to the filing of this brief. Copies of the letters granting consent have been filed with the Clerk.

has a broad intellectual property portfolio—including well over 1,500 patents—it uses to offer valuable goods and services into the marketplace. At the same time, *amicus* is also a frequent target of infringement suits. Because *amicus* owns patents, has asserted those patents against competitors, and is subject to suits based on others' patents, it has a balanced perspective on, and unique insights into, ensuring that this Nation's patent laws are properly construed.

The Patent Act requires patents to include claims "particularly pointing out and distinctly claiming the subject matter which the applicant regards as his invention." 35 U.S.C. §112, ¶2.[2] That requirement—known as "definiteness"—helps define the scope of the patentee's exclusive right and inform the public about the patent's boundaries. For over a decade, however, the Federal Circuit has held that a claim is indefinite only where it is "insolubly ambiguous," rendering the claim not "amenable to construction." *Exxon Research & Eng'g Co.* v. *United States*, 265 F.3d 1371, 1375 (Fed. Cir. 2001). In *amicus*'s view, both the Federal Circuit's construction of the "definiteness" requirement, and petitioner's competing standard, depart from the statute's text, this Court's precedents, and any notion of sound patent policy. The Federal Circuit's construction renders the "definiteness" requirement largely toothless. Conversely, the contention that *any* ambiguity is fatal—that the "definiteness" standard is not satisfied if there is more than one reasonable construction—would threaten to invalidate an enormous swath of patents and deprive inventors of any meaningful ability to claim the full scope of their inven-

---

[2] The patent subject to the "definiteness" ruling in this case was filed before Congress recodified paragraph two of Section 112 at 35 U.S.C. ¶112(b). See Pet. Br. 2 n.1.

tion. Properly construed, the "definiteness" requirement should demand that the patent claim—when read in light of the patent's written specification—*reasonably* inform those skilled in the art about the metes and bounds of the invention.

SUMMARY OF ARGUMENT

I. A. The Federal Circuit's construction of the "definiteness" requirement cannot be reconciled with either the statute's text or purpose of providing notice regarding the boundaries of the invention. Under the Federal Circuit's construction, a claim is indefinite only if it is "insolubly ambiguous" and therefore not "amenable to construction." That standard improperly preserves claims that neither distinguish the invention from prior art nor reasonably inform those skilled in the art about the invention's scope. The Federal Circuit's "insolubly ambiguous" standard, moreover, forces courts to abdicate an important role in ensuring patent quality. The PTO faces significant hurdles—including insufficient resources—to police Section 112's "definiteness" requirement with the requisite accuracy. The Federal Circuit's current lax standard, however, precludes federal courts from correcting the resulting oversights by enforcing the "definiteness" requirement in only the most egregious of circumstances. Because courts can so rarely find a claim indefinite, companies like *amicus* face dubious infringement suits based on patents with vague and intolerably elastic claims.

B. Although the Federal Circuit's standard is far too lenient, the proposal that this Court adopt a standard that does not tolerate any ambiguity goes too far in the other direction. Under that proposed standard, a claim is indefinite whenever it is open to multiple reasonable interpretations. That standard is inconsistent with this

Court's holding that, in cases of ambiguity, courts (as opposed to juries) should construe the patent's terms. The entire exercise of construing claims would be pointless if any ambiguity rendered the patent invalid.

Petitioner borrows its proposed standard for *judicial review* from the standard the PTO uses when deciding *whether to issue the patent.* But the PTO has adopted a strict standard because that helps it force applicants to amend claims to provide more precision on the scope of the invention *before the patent is issued.* Before the PTO, patent applicants are free to amend their claims—and frequently do so. No such opportunity to amend exists when a court decides "definiteness": A court will either invalidate the patent or uphold it. A zero-tolerance approach to ambiguity would place nearly every patent in jeopardy for failure to achieve often-unobtainable perfection. It would regularly deny inventors a meaningful opportunity to claim the full scope of their invention. And it would undermine the incentives the patent system was designed to create.

II. A. The proper interpretation of the "definiteness" requirement must balance the interests of inventors and the public. The patent holder should know what it owns, and the public should know the boundaries of the invention. At the same time, the limits of language and foresight make perfection an impossibility. The "definiteness" requirement should not become a trap that denies inventors the rewards of legitimate inventions. Administrable boundaries can ensure that the patent system will reward inventions but not the gamesmanship of deliberately obfuscating the claims so they remain infinitely manipulable. They also minimize disadvantages the public faces by not knowing where the patentee's exclusive rights end.

B. As this Court has recognized, the proper standard to evaluate indefiniteness is "reasonableness." Under that standard, a claim is indefinite unless it *reasonably* informs those skilled in the art about the metes and bounds of the invention at the time the patent is granted. That workable standard tolerates a certain degree of ambiguity because language is an imprecise means of describing inventions—and because inventors often cannot possibly anticipate every future use to which their invention might be put. At the same time, the requirement serves the public by ensuring that patents fairly warn others of the outer boundaries of the invention claimed by the patent. It is also consistent with other areas of law where an applicant must "particularly" describe certain matters. For example, the Warrant Clause requires warrants to particularly describe the place to be searched and the persons or things to be seized. And Federal Rule of Civil Procedure 9(b) imposes a particularity requirement for fraud pleadings. The sufficiency of descriptions in both scenarios is evaluated under a reasonableness standard.

ARGUMENT

The Patent Act mandates that a patent application include claims that "particularly point[ ] out and distinctly claim[ ]" the subject matter of the patentee's invention. 35 U.S.C. § 112, ¶2. The Federal Circuit has all but gutted that requirement, refusing to rule that a claim is indefinite even where the patent fails to reasonably inform those skilled in the art about the metes and bounds of the claimed invention. Conversely, the zero-tolerance approach proposed by others is equally flawed. It would invalidate patents whenever a court finds *any* ambiguity in the claim, denying inventors the benefits of their invention for failing to adhere to an unachievable degree of

linguistic clarity. Neither standard is sustainable. Neither is consistent with precedent. And neither should be adopted. Instead, this Court should adhere to the "reasonableness" standard—which requires a claim to *reasonably* inform those skilled in the art about the metes and bounds of the invention—that has pervaded its precedents for a century.

I. NEITHER THE FEDERAL CIRCUIT'S "INSOLUBLY AMBIGUOUS" STANDARD NOR A ZERO-AMBIGUITY STANDARD IS CORRECT

A. The Federal Circuit's "Insolubly Ambiguous" Standard Is Incorrect

In *Exxon Research & Engineering Co.* v. *United States*, 265 F.3d 1371 (Fed. Cir. 2001), the Federal Circuit properly rejected the view that "a claim is indefinite merely because it poses a difficult issue of claim construction." *Id.* at 1375. But the court of appeals then ruled that a claim is indefinite only if it is "insolubly ambiguous," so that the claim is not "amenable to construction." *Ibid.* Under that standard, "the meaning of the claim" need only be "discernible." *Ibid.* The Federal Circuit's current standard defies the text and purpose of the "definiteness" requirement; undermines the judicial role; and creates improper incentives to draft claims that do not inform the public about the scope of the invention.

1. *For Centuries, This Court and Congress Have Required Patent Claims To Distinguish the Invention from Prior Art and Provide the Public with Appropriate Notice*

From the time of the Nation's founding, patent statutes have sought to ensure that issued patents distinguish the invention from the prior art and provide the public with appropriate notice regarding the scope of the inventor's claim. The Patent Act of 1790, for example,

required the grantee of "each patent" to "deliver to the Secretary of State" a writing that, among other things, was "so particular" and "so exact, as not only to distinguish the invention or discovery from other things before known and used, but also to enable a workman or other person skilled in the art or manufacture * * * to make, construct or use the same." Act of Apr. 10, 1790, ch. 7, §2, 1 Stat. 109, 110-111; see also Act of Feb. 21, 1793, ch. 11 §3, 1 Stat. 318, 321.

In *Evans* v. *Eaton*, 20 U.S. 356 (1822), this Court recognized that a patent's written description performs the dual functions of "mak[ing] known the manner of constructing the machine" and "put[ting] the public in possession of what the party claims as his own invention." *Id.* at 433-434. The Court went on to invalidate an improvement patent in part because its overbroad description violated those purposes: Although it "describe[d] the machine fully and accurately, as a whole," that patent also "mix[ed] up the new" elements of the invention together with the "old" elements of the device it sought to improve. *Id.* at 434. The patent thus could not be sustained, as it did not "in the slightest degree explain * * * the nature or limit of the improvement which the party claims as his own." *Id.* at 434-435.

The use of separately identified "claims" to define the scope of the patented invention was not a statutory requirement when this Court decided *Evans*. But the practice became increasingly popular in the years following *Evans*. And in 1836, Congress codified the practice. See Act of July 4, 1836, ch. 357, §6, 5 Stat. 117. The 1836 Act provided that an applicant "shall *particularly specify and point out* the part, improvement, or combination, which he claims as his own invention." *Id.* at 119 (emphasis added). By then, applicants had become so used to

drafting formal claims that the new statutory language "was understood as merely codifying the existing law which had been developed by the courts" after *Evans*. Karl B. Lutz, *Evolution of the Claims of U.S. Patents*, 20 J. Pat. Off. Soc'y 134, 134 (1938).

By 1850, "judges were * * * beginning to express more frequently the idea that in seeking to ascertain the invention 'claimed' in a patent the inquiry should be limited to interpreting the summary, or 'claim.'" *Markman* v. *Westview Instruments, Inc.*, 517 U.S. 370, 379 (1996) (quoting Lutz, *supra*, at 145). And in 1870, Congress amended the Patent Act to recognize the "claim" as the essential unit by which a patent distinguishes between the prior art and a patentee's novel contribution. Act of July 8, 1870, ch. 230, §26, 16 Stat. 198, 201. The 1870 Act required a patent applicant to "particularly point out and distinctly claim the part, improvement, or combination which he claims as his invention or discovery." *Ibid.*

Thus, from the 1790s to the 1870s, the Patent Act evolved from requiring patentees to set forth a general description of how the invention differed from prior art to more "particularly" and "distinctly" defining an invention's scope through the careful drafting of "claims." That requirement "reliev[ed] the courts from the duty of ascertaining the exact invention of the patentee by inference and conjecture, derived from a laborious examination of previous inventions, and a comparison thereof with that claimed by him." *Keystone Bridge Co.* v. *Phoenix Iron Co.*, 95 U.S. 274, 278 (1877).

This Court has repeatedly recognized the purposes of the Patent Act's requirement of a claim that "particularly" and "distinctly" sets forth the subject matter of the invention. It "distinguish[es] what is claimed from what went before in the art." *United Carbon Co.* v. *Binney &*

Smith Co., 317 U.S. 228, 236 (1942). It also serves a critical public-notice function. As this Court summarized in *Permutit Co.* v. *Graver Corp.*, 284 U.S. 52 (1931), a claim must be "describe[d] * * * in such terms that any person skilled in the art to which it appertains may construct and use it after the expiration of the patent," and also "inform the public during the life of the patent of the limits of the monopoly asserted; so that it may be known which features may be safely used or manufactured without a license and which may not." *Id.* at 60; see also *Gen. Elec. Corp.* v. *Wabash Appliance Corp.*, 304 U.S. 364, 369 (1938) ("The limits of a patent must be known for the protection of the patentee, the encouragement of the inventive genius of others, and the assurance that the subject of the patent will be dedicated ultimately to the public."); *Merrill* v. *Yeomans*, 94 U.S. 568, 573-574 (1876) ("It seems to us that nothing can be more just and fair, both to the patentee and to the public, than that the former should understand, and correctly describe, just what he has invented, and for what he claims a patent."); *Bates* v. *Coe*, 98 U.S. 31, 39 (1878).

Congress reaffirmed the role of claims in the patent system in the 1952 Patent Act. That Act "is not materially different from the 1870 Act with regard to claiming." *Warner-Jenkinson Co., Inc.* v. *Hilton Davis Chem. Co.*, 520 U.S. 17, 26 (1997). Patents must, by statute, include claims "particularly pointing out and distinctly claiming the subject matter which the applicant regards as his invention." 35 U.S.C. §112, ¶2.

2. The "Insolubly Ambiguous" Standard Defies the Text and the Public-Notice Function That the "Definiteness" Requirement Serves

The Federal Circuit's "insolubly ambiguous" standard defies the statute's text. The statutory "definiteness" re-

quirement demands that a patent claim "particularly" point out and "distinctly" claim the subject matter of the patentee's invention. 35 U.S.C. §112, ¶2. It does not say that patent claims need only avoid formulations that are so "insolubly ambiguous" that the claims are not even "amenable to construction."

Nor can the "insolubly ambiguous" standard be reconciled with the public-notice function the definiteness requirement serves. The public does not have sufficient notice merely because it is not *impossible* to squeeze some meaning out of a claim—*i.e.*, merely because the claim is not insolubly ambiguous. Rather, the public has notice about the scope of the invention "foreclosed from future enterprise" only if the claim reasonably apprises those skilled in the art as to what the inventor claims and what he does not. *United Carbon*, 317 U.S. at 236.

The Federal Circuit's precedents illustrate the dangers of its permissive standard. In *Star Scientific, Inc.* v. *R.J. Reynolds Tobacco Co.*, 655 F.3d 1364 (Fed. Cir. 2011), for example, the court addressed whether patents for curing tobacco leaves were sufficiently definite. The patents claimed a method to cure the leaves that could substantially prevent the formation of a carcinogenic chemical compound by drying the leaves in a "controlled environment." *Id.* at 1373. Although the claim did not explain how the patent's "controlled environment" differed from conventional tobacco curing—which utilizes a controlled environment measuring humidity, temperature, and airflow in a curing barn—the court ruled the claim was not "insolubly ambiguous." *Id.* at 1373-1374.

Likewise, in *Bancorp Services, L.L.C.* v. *Hartford Life Insurance Co.*, 359 F.3d 1367 (Fed. Cir. 2004), the Federal Circuit concluded that a claim using the term "surrender value protected investment credits" was not in-

solubly ambiguous. *Id.* at 1371-1376. It did so after acknowledging that the term was "not defined in the patent, and [the patentee] has not pointed us to any industry publication that defines the term." *Id.* at 1372. The Federal Circuit nonetheless reversed the district court's indefiniteness ruling that the term "would not have been understandable to a person of skill in the field of insurance administration." *Id.* at 1374. Other examples abound.[3] And these examples do not reflect cases where parties do not even bother to raise an indefiniteness defense because, under the Federal Circuit's standard, they will so rarely be successful. The Federal Circuit's "insolubly ambiguous" formulation fails to protect the public-notice function in practice just as much as it fails to do so in principle.

3. The "Insolubly Ambiguous" Standard Undermines the Judicial Role

The Federal Circuit's lenient, almost-anything-survives standard also undermines an important judicial function. The PTO must process an enormous quantity of patent applications: In 2012, the PTO received over 575,000 patent applications and granted over 275,000 patents. U.S. Patent & Trademark Office, *U.S. Patent Statistics, Calendar Years 1963-2013* (2014), http://www.uspto.gov/web/offices/ac/ido/oeip/taf/us_stat.pdf. As a result, patent examiners do not have sufficient time or resources to address every issue in detail:

---

[3] See, *e.g.*, *Praxair, Inc.* v. *ATMI, Inc.*, 543 F.3d 1306, 1321 (Fed. Cir. 2008) (overruling a district court's indefiniteness conclusion even though the claim term "port body" "may not be a model of clarity" and expert testimony asserted that the claims were indefinite); *Wellman, Inc.* v. *Eastman Chem. Co.*, 642 F.3d 1355, 1366 (Fed. Cir. 2011); *Energizer Holdings, Inc.* v. *Int'l Trade Comm'n*, 435 F.3d 1366, 1371 (Fed. Cir. 2006); *All Dental Prodx, LLC* v. *Advantage Dental Prods., Inc.*, 309 F.3d 774, 780 (Fed. Cir. 2002).

> A patent examiner spends just *eighteen hours* on the average patent application—*spread out over a year or two*—in which he or she must review the application; conduct a prior-art search; review both the prior art submitted by the applicant and that uncovered in the search; compare the prior art to the claimed invention; go through multiple rounds of office actions (written statements finding claims patentable or not, and if not, explaining why not) and responses to office actions; perhaps conduct an interview with the applicant; and ensure the application complies with various formalities.

Roger Allan Ford, *Patent Invalidity Versus Noninfringement*, 99 Cornell L. Rev. 71, 89 (2013) (emphasis added). Nor would spending an inordinate amount of time on every application be efficient: The vast majority of patents will never be asserted for any purpose. And patent examiners cannot "benefit from the perspectives provided by an adversarial process since patent prosecution is conducted *ex parte*." *Ibid.*

Consequently, judicial review for "definiteness" in the litigation context fulfills a critical role. "A determination of claim indefiniteness is a legal conclusion that is drawn from the court's performance of its duty as the construer of patent claims." *Atmel Corp.* v. *Info. Storage Devices, Inc.*, 198 F.3d 1374, 1378 (Fed. Cir. 1999) (quotation marks omitted). A district court has more time and resources than patent examiners to focus in on a single claim to determine its validity. Litigation, moreover, is an adversarial process where "opposing parties argu[e] for different outcomes," often with experts supporting their positions. Doug Lichtman & Mark A. Lemley, *Rethinking Patent Law's Presumption of Validity*, 60 Stan. L. Rev. 45, 54 (2007). Because the process is not *ex parte*,

"the judge and jury" can focus on "evaluat[ing] the alternatives" proposed by the parties "rather than identify[ing] arguments and weaknesses themselves." *Ibid.* And the Federal Circuit "is a specialized court" that has the expertise to evaluate cases "through the lens of patent-related experience." *Dickinson* v. *Zurko*, 527 U.S. 150, 163 (1999). "Experience thus counsels against [a] court abdicating its responsibility to determine the boundaries" of indefiniteness. *Therasense, Inc.* v. *Becton, Dickinson & Co.*, 649 F.3d 1276, 1294 (Fed. Cir. 2011) (en banc). But the Federal Circuit's "insolubly ambiguous" standard reduces that role to the near-vanishing point. To be sure, a patent is presumed valid once issued. See 35 U.S.C. §282. But that does not justify rewriting the standard of definiteness so that judges must abdicate their role unless a claim is so devoid of meaning that it is incapable of being construed at all.

4. The "Insolubly Ambiguous" Standard Creates Improper Incentives To Draft Vague Claims

The Federal Circuit's standard also creates perverse incentives. Rather than promoting the use of clear claim language, it gives patent applicants an incentive to use the vaguest possible terms so as to permit dubious infringement suits that reach well beyond the actual innovation underlying the patent. The patentee thus "unfairly benefit[s] from incomplete, unclear, and imprecise descriptions of its own invention." Douglas R. Nemec & Emily J. Zelenock, *Rethinking the Role of the Written Description Requirement in Claim Construction: Whatever Happened to "Possession Is Nine-Tenths of the Law?"*, 8 Minn. J.L. Sci. & Tech. 357, 406 (2007).

Amicus has regularly confronted that strategy—a patentee asserting infringement based on an expansive construction of vague claims that go well beyond any-

thing for which the patent and its specification could conceivably give notice. For example, in *Bright Response, LLC* v. *Google Inc.*, No. 2:07-CV-371, 2010 WL 2522424 (E.D. Tex. June 18, 2010), a non-practicing entity sued Yahoo! for infringement of a patent concerning a method for automatically receiving, interpreting, and classifying emails. *Id.* at *1. Yahoo! argued that one of the non-practicing entity's claims—a dependent claim labeled "claim 28"—was indefinite because it was "impossible to determine" whether that claim's steps were supposed to "replace" the independent claim's steps "or are performed in addition" to them. *Id.* at *11. The court ruled that the dependent claim was not insolubly ambiguous because its preamble "indicate[d] that the steps of the independent claim are incorporated into the dependent claim." *Ibid.* Based on that determination, the court set forth the order in which the dependent claim's individual steps must be performed. *Ibid.*

As a result of the district court's claim construction, Yahoo! sought to exclude expert testimony that the dependent claim's steps could proceed in a different order. Despite initially "agree[ing] with the defendants regarding the order of steps in claim 28," Order, No. 2:07-CV-371-CD, Dkt. No. 594 (E.D. Tex. Aug. 3, 2010), the court later changed course and concluded that two of the claim's steps could be performed in *any* order, Order, No. 2:07-CV-371-CD, Dkt. No. 605 (E.D. Tex. Aug. 4, 2010). The district court did not address how its new position could be reconciled with its earlier indefiniteness ruling; how the non-practicing entity's patent could have provided Yahoo! with reasonable notice of the patent's scope at the time it was issued; or how the shifting scope of the non-practicing entity's patent was "specific" enough to "protect[] the public against extension of the

scope of the patent." *Universal Oil Prods.* v. *Globe Oil & Refining Co.*, 322 U.S. 471, 484-485 (1944).

Although *amicus* prevailed in that case, it regularly faces suits based on expansive constructions of vague claims, reaching well beyond anything contemplated by the specification. Many of those efforts, of course, are best redressed by proper claim construction. But a properly calibrated requirement of definiteness is critical as well. It provides the public with proper notice and "guard[s] against unreasonable advantages to the patentee." *General Electric*, 304 U.S. at 369; see pp. 6-9, *supra*. Unreasonably vague boundaries, by contrast, "disadvantage[ ]" the public by creating "uncertainty." *Ibid.* The Federal Circuit's current standard has precisely the latter effect.

B. The Proposal That *Any* Ambiguity Invalidates a Patent Is Also Incorrect

Swinging the pendulum to the opposite extreme, some argue that a claim fails the "definiteness" requirement whenever it is open to "multiple reasonable interpretations." See, *e.g.*, Pet. Br. 22. That is just another way of saying that patent law tolerates no ambiguity whatsoever. See *ibid.* ("The Patent Act * * * Forbids Ambiguous Patent Claims."). A claim with only one reasonable construction is unambiguous. Even where one construction is clearly superior, the patent would be invalidated as indefinite simply because someone can assert a competing construction that, however inferior, is not unreasonable. That kind of zero-tolerance-for-ambiguity approach cannot be reconciled with longstanding precedent and threatens to deny patentees the rewards of their inventions for failure to achieve often-unachievable clarity.

1. A Zero-Ambiguity Standard Defies Precedent

Under the zero-tolerance standard, a patent is invalid whenever it is open to "multiple reasonable interpretations." Pet. Br. 22. In *Markman* v. *Westview Instruments, Inc.*, 517 U.S. 370 (1996), however, this Court held that the construction of patent claims is "an issue for the judge, not the jury." *Id.* at 391. District courts now routinely conduct specialized *Markman* hearings to determine the scope of patent claims. During a *Markman* hearing, it is the district court's duty to construe claims. See, *e.g.*, *AFG Indus., Inc.* v. *Cardinal IG Co., Inc.*, 239 F.3d 1239, 1249 (Fed. Cir. 2001). That exercise would be pointless if any ambiguity rendered the patent invalid in any event.

The reasons *Markman* gave for allocating claim construction to courts, rather than juries, make that particularly clear. Claim construction issues, the Court emphasized, are often "'highly technical'"; the resolution would involve "testimony" from experts "requiring credibility determinations"; and in doing claim construction, judges would be "more likely to be right" in finding the correct outcome. 517 U.S. at 388-389. It makes no sense to say there may be "credibility determinations," and to say judges will "likely" construe claims correctly, if every patent being construed is already supposed to be bereft of ambiguity.

Nor can one find support for an only-one-reasonable-construction standard in PTO rulings. See Pet. Br. 45 (citing *Ex Parte Miyazaki*, 89 U.S.P.Q.2d 1207, 2008 WL 5105055 (B.P.A.I. Nov. 19, 2008)). The PTO itself recognizes that the standard it uses when processing patents is *not* appropriate when deciding whether to invalidate patents that have already been issued. "The USPTO is justified in using a *lower threshold showing of ambiguity* to

support a finding of indefiniteness," the PTO has explained, "because the applicant has an *opportunity and a duty to amend the claims* during prosecution to more clearly and precisely define the metes and bounds of the claimed invention and to more clearly and precisely put the public on notice of the scope of the patent." *Miyazaki*, 2008 WL 5105055, at *6 (emphasis added); see also U.S. Patent & Trademark Office, *Manual of Patent Examining Procedure* (MPEP) §2173.01 (8th ed., rev. Aug. 2012) ("Claims under examination are evaluated with a different standard than patented claims to determine whether the language is definite.").[4] But there is no opportunity to amend after a patent has been issued. The consequence of a judicial finding of "indefiniteness" is invalidity.

The United States agrees that the PTO is justified using a lower threshold. The PTO's standard "stems not from different interpretations of Section 112, but from the distinct roles that the PTO and the courts play in the patent system." Brief for the United States as *Amicus Curiae*, *Applera Corp.* v. *Enzo Biochem, Inc.*, No. 10-426, 131 S. Ct. 847, at 17 (2010). Unlike courts, the PTO has the ability to "requir[e] the applicant" to refine the scope of the claim. *Ibid.*

---

[4] See also *Burlington Indus. Inc.* v. *Quigg*, 822 F.2d 1581, 1583 (Fed. Cir. 1987) ("Issues of judicial claim construction [that] arise *after* patent issuance, for example during infringement litigation, have *no place* in prosecution of pending claims before the PTO, when any ambiguity or excessive breadth may be corrected by merely changing the claim." (emphasis added)); *In re Am. Acad. of Sci. Tech. Ctr.*, 367 F.3d 1359, 1369 (Fed. Cir. 2004) ("[T]he Board is required to use a different standard for construing claims than that used by district courts."); *Halliburton Energy Servs., Inc.* v. *M-I LLC*, 514 F.3d 1244, 1255 (Fed. Cir. 2008); *In re Zletz*, 893 F.2d 319, 322 (Fed. Cir. 1989).

Indeed, the PTO regularly uses different standards than courts. For example, when deciding whether to grant a patent in the first instance, "the patent application claims may be given their *broadest* interpretation consistent with the specification," not the most reasonable construction. *In re Buszard*, 504 F.3d 1364, 1366 (Fed. Cir. 2007) (citing *In re Yamamoto*, 740 F.2d 1569, 1571 (Fed. Cir. 1984) (emphasis added)). That otherwise-counterintuitive standard is justified "to facilitate sharpening and clarifying the claims at the application stage." *Ibid.* "Because the applicant has the opportunity to amend claims during prosecution, giving a claim its broadest reasonable interpretation will reduce the possibility that the claim, once issued, will be interpreted more broadly than is justified." MPEP, *supra*, §2173.01. Once again, it would make no sense to apply that standard in litigation after a patent has issued, and no court does so. See *Yamamoto*, 740 F.2d at 1571.

2. A Zero-Ambiguity Standard Would Wreak Havoc by Invalidating Patents for Failing To Achieve the Unachievable

Inventions must be reduced to words in patent applications, but language cannot always be reduced so that a claim has only one reasonable meaning. "There are limits to the precision of language." *United States* v. *Soderna*, 82 F.3d 1370, 1377 (7th Cir. 1996). That is particularly true where an invention is "novel and words do not exist to describe it." *Autogiro Co. of Am.* v. *United States*, 384 F.2d 391, 397 (Ct. Cl. 1967). As the PTO has explained, because "[n]ew terms are often used when a new technology is in its infancy or is rapidly evolving," the "requirements for clarity and precision must be balanced with the limitations of the language and the science." MPEP, *supra*, §2173.05(a). A patent should not

be invalidated—and an inventor should not be prevented from obtaining the fruits of his labor—"merely because [the claim] poses a difficult issue of claim construction." *Power-One, Inc.* v. *Artesyn Techs., Inc.*, 599 F.3d 1343, 1350 (Fed. Cir. 2010).

This Court has long recognized, and accounted for, the fact that using words to describe an invention can be more of an art than a science. A patent's specifications, for example, do not need to list "all possible forms in which the claimed principle may be reduced to practice" if the claim otherwise informs the public about the metes and bounds of the invention. *Smith* v. *Snow*, 294 U.S. 1, 11 (1935). And there may be new developments or applications unforeseen (and unforeseeable) at the time of the patent application that should still reasonably fall within the scope of a claim. Courts do not require patentees to "predict all future developments." *Hughes Aircraft Co.* v. *United States*, 717 F.2d 1351, 1362 (Fed. Cir. 1983); see *SRI Int'l* v. *Matsushita Corp. of Am.*, 775 F.2d 1107, 1121 (Fed. Cir. 1985) (en banc) ("The law does not require the impossible. Hence, it does not require that an applicant describe in his specification every conceivable and possible future embodiment of his invention."); cf. *Bilski* v. *Kappos*, 130 S. Ct. 3218, 3227 (2010) (plurality) (rejecting rule "that unforeseen innovations * * * are always unpatentable"). A standard that requires too much precision would preclude inventors from drafting their claims with sufficient breadth to cover new developments. Such a standard would also allow others to easily circumvent the patent. See *Markman*, 517 U.S. at 373-374 (claim must "function[ ] to forbid not only exact copies of an invention, but products that go to the heart of an invention but avoid[ ] the literal language of the claim by making a non-critical change" (quotation marks omitted)); *Graver Tank*

& Mfg. Co. v. *Linde Air Prods. Co.*, 339 U.S. 605, 607 (1950).

An excessively demanding, zero-tolerance standard would wreak havoc on this Nation's patent system and the incentives it is designed to create. Inventors would have little incentive to pour research dollars into seeking patents for new and useful technologies if there is an unreasonable possibility that their patents would be invalidated whenever a competitor could plausibly assert that a claim is open to more than one reasonable construction. And those who do create a pathmarking invention will often be deterred from accepting the patent bargain—disclosure in exchange for a period of exclusivity—that benefits society at large; instead, they may choose another method of protecting their invention, such as keeping it as a trade secret.

That could have enormous costs. "The aim of the patent laws is not only that members of the public shall be free to manufacture the product or employ the process disclosed by the expired patent, but also that the consuming public at large shall receive the benefits of the unrestricted exploitation, by others, of its disclosures." *Scott Paper Co.* v. *Marcalus Mfg. Co.*, 326 U.S. 249, 255 (1945). Fewer disclosures will inevitably result in less innovation: Without the patent on the books in the first instance, others will be unable to rely on that expanding knowledge base to develop advances that build on the patented technique.

II. THE PROPER INTERPRETATION OF THE "DEFINITENESS" REQUIREMENT FOCUSES ON REASONABLENESS

Neither the Federal Circuit's "insolubly ambiguous" standard nor a zero-ambiguity standard properly balances the interests of inventors and the public. Rather

than adopt one of those extreme views, this Court should reaffirm that Section 112's "definiteness" requirement is based on *reasonableness*. Under a reasonableness standard, a claim is indefinite unless it *reasonably* informs those skilled in the art about the metes and bounds of the invention at the time the patent is granted. That reasonableness requirement is supported by this Court's precedents; properly balances the interests the "definiteness" requirement is designed to serve; and draws support from analogous areas of law.

A. The "Definiteness" Requirement Must Balance the Interests of Inventors and the Public Alike

Section 112's "definiteness" requirement—which requires claims that "particularly point[ ] out and distinctly claim[ ] the subject matter which the applicant regards as his invention"—serves two critical functions: It "secure[s] to [the patentee] all to which he is entitled," and it "apprise[s] the public of what is still open to them." *McClain* v. *Ortmayer*, 141 U.S. 419, 424 (1891). As a result, any interpretation of the "definiteness" requirement must respect "the delicate balance the law attempts to maintain between inventors, who rely on the promise of the law to bring the invention forth, and the public, which should be encouraged to pursue innovations, creations, and new ideas beyond the inventor's exclusive rights." *Festo Corp.* v. *Shoketsu Kinzoku Kogyo Kabushiki Co.*, 535 U.S. 722, 731 (2002). Interpreting the "definiteness" requirement in accordance with that balance reinforces the Patent Act's "carefully crafted bargain" between the inventor and the public. *Pfaff* v. *Wells Elecs., Inc.*, 525 U.S. 55, 63 (1998).

To properly balance the patentee's interest in securing the full scope of its patent and the public's interest in knowing the precise contours of the patentee's exclusive

rights, this Court has long held that the "definiteness" requirement is met only where claims "*clearly distinguish* what is claimed from what went before in the art and *clearly circumscribe* what is foreclosed from future enterprise." *United Carbon*, 317 U.S. at 236 (emphasis added). It also recognizes that patent applicants "are their own lexicographers." MPEP, *supra*, §2173.01. Because "owners will know more about their intellectual goods than observers will," Clarisa Long, *Information Costs in Patent and Copyright*, 90 Va. L. Rev. 465, 497 (2004), they are best positioned to minimize vagueness and ambiguity when they draft claims. At the same time, the requirement cannot be converted into a trap for the unwary or a demand for clarity that is neither reasonable nor achievable. To the contrary, this Court has long recognized that, because there are limits on how well inventions can be described with the written word, some degree of imprecision or ambiguity must be tolerated. See pp. 18-20, *supra*.

B. The Proper "Definiteness" Standard Incorporates Reasonableness, and Thereby Tolerates Some Ambiguity in Patent Claims

1. This Court Has Long Used a Reasonableness Standard To Evaluate Patent Claims

"Reasonableness" is a standard that appears throughout American law. It is a bedrock principle of, among other areas, antitrust law, *FTC* v. *Actavis*, Inc., 133 S. Ct. 2223, 2237-2238 (2013), negligence law, *Restatement (Second) of Torts* §283 (1965), materiality in securities law, *TSC Indus., Inc.* v. *Northway, Inc.*, 426 U.S. 438, 449 (1976), appellate review of criminal sentences, *Rita* v. *United States*, 551 U.S. 338, 350 (2007), energy rate regulation, 16 U.S.C. §824d(a), and search-and-seizure under the Fourth Amendment, *Terry* v. *Ohio*, 392 U.S. 1, 30-31

(1968) (search); *United States* v. *Mendenhall*, 446 U.S. 544, 554 (1980) (seizure). Words like "reasonable" and "unreasonable" are "widely used and well understood." *Cameron* v. *Johnson*, 390 U.S. 611, 616 (1968).

This Court has ruled that reasonableness also informs "definiteness" under Section 112. "[T]he certainty which the law requires in patents," this Court explained, "is not greater than is *reasonable*, having regard to their subject matter." *Minerals Separation* v. *Hyde*, 242 U.S. 261, 270 (1916) (emphasis added). In other words, "claims must be *reasonably clear-cut*." *United Carbon*, 317 U.S. at 236 (emphasis added). Under that standard, a claim is indefinite unless it reasonably informs those skilled in the art about the metes and bounds of the invention, *i.e.*, it provides the degree of particularity that is reasonable under the circumstances.

The reasonableness standard leaves room for tolerable ambiguity. In *Minerals Separation*, for example, this Court held that a claim in a patent for improving the process of extracting minerals from ore was reasonably definite even though the claim allowed for "variation of treatment" in how much oil to use with different ores. 242 U.S. at 270. In that case, the Court stated that "[t]he composition of ores varies infinitely, * * * and it is obviously impossible to specify in a patent the precise treatment which would be most successful and economical in each case." *Id.* at 271. Even though the patent left "something to the skill of persons applying the invention," this Court held that the claim was "sufficiently definite to guide those skilled in the art to its successful application." *Ibid.*

Similarly, in *Eibel Process Co.* v. *Minnesota & Ontario Paper Co.*, 261 U.S. 45 (1923), the Court upheld a patent on a machine for printing newspapers even though

a particular height (used to encourage water to wash over and off printed pages) was described only in relatively ambiguous terms. The height of the top of the patented machine was described as being located at a "substantial elevation." *Id.* at 49. A "figure accompanying the specification" further demonstrated that the elevation would be "substantial as compared with" earlier devices. *Id.* at 65. This Court observed that expressions like "'high' and 'substantial,' in describing an invention or discovery," have been "recognized by this [C]ourt as sufficient." *Id.* at 66. The Court upheld the patent, concluding that, based on the "patent and its specifications," one skilled in the art would have "no difficulty" in understanding the claimed invention. *Id.* at 65.

Other cases likewise demonstrate that a claim can be reasonably particular even if it leaves some degree of ambiguity. In *Diamond* v. *Diehr*, 450 U.S. 175 (1981), this Court ruled that claims to a rubber-curing process including the step of "heating said mold *to a temperature range approximating* a predetermined rubber curing temperature" were patentable. *Id.* at 179 n.5 (emphasis added). This Court likewise upheld Alexander Graham Bell's telephony patent, which claimed "[t]he method of and apparatus for transmitting vocal or other sounds telegraphically, as herein described, by causing electrical undulations, *similar in form* to the vibrations of the air." *Dolbear* v. *Am. Bell Tel. Co.*, 126 U.S. 1, 163 (1888) (emphasis added). And the Court upheld claims to "the manufacturing of fat acids and glycerides from fatty bodies by the action of water at a *high* temperature and pressure." *Tilghman* v. *Proctor*, 102 U.S. 707, 721 (1880) (emphasis added). None of the claims was ruled indefinite because all of the claims, when construed in light of

the rest of the patents, reasonably informed those skilled in the art about the metes and bounds of the invention.[5]

Consistent with those cases, lower courts (including the Federal Circuit's predecessor and the Federal Circuit itself) faithfully enforced the reasonableness standard for decades.[6] The standard ensured both that claims were sufficiently particular under the circumstances and the public had reasonable notice about the metes and bounds of the invention. But the Federal Circuit's decision in *Exxon* departed from that longstanding precedent.

2. The Reasonableness Standard Properly Balances the Interests the "Definiteness" Requirement Is Designed To Serve

The reasonableness standard properly respects "the delicate balance" between the inventor's reliance on the promise of patent protection and the public's need for fair notice of the scope of "the inventor's exclusive rights." *Festo*, 535 U.S. at 731. With respect to the public-notice function, it reduces the "zone of uncertainty" that would

---

[5] *Diehr*, *Dolbear*, and *Tilghman* did not expressly address indefiniteness. But this Court regularly resolves patent cases on grounds other than those raised by the parties. See, *e.g.*, *Permutit Co.* v. *Graver Corp.*, 284 U.S. 52 (1931).

[6] See, *e.g.*, *Application of Angstadt*, 537 F.2d 498, 503 (C.C.P.A. 1976); *Application of Bosy*, 360 F.2d 972, 974 (C.C.P.A. 1966); *Procter & Gamble Mfg. Co.* v. *Ref., Inc.*, 135 F.2d 900, 907 (4th Cir. 1943); *Claude Neon Elec. Prods.* v. *Brilliant Tube Sign Co.*, 48 F.2d 176, 178 (9th Cir. 1931); *Producers' & Refiners' Corp.* v. *Lehmann*, 18 F.2d 492, 495 (8th Cir. 1927); *Schumacher* v. *Buttonlath Mfg. Co.*, 292 F. 522, 535 (9th Cir. 1920); cf. *Union Pac. Res. Co.* v. *Chesapeake Energy Corp.*, 236 F.3d 684, 692 (Fed. Cir. 2001) (pre-*Exxon* standard stating that "[t]he definiteness inquiry focuses on whether those skilled in the art would understand the scope of the claim when the claim is read in light of the rest of the specification").

otherwise stifle "enterprise and experimentation." *United Carbon*, 317 U.S. at 236. Such a standard reasonably "apprise[s] the public of what is still open to them," and what is not. *McClain*, 141 U.S. at 424. A requirement that claims be reasonably particular thus reaffirms the fundamental principle that "[a] patent holder should know what he owns, and the public should know what he does not." *Festo*, 535 U.S. at 731. By reasonably explaining to the public the scope of an invention, moreover, the claim "fosters innovation and competitiveness." MPEP, *supra*, §2173. The reasonableness requirement also "creates higher quality prior art," limiting "the maximum scope of patent claims." Jason Rantanen, *Patent Law's Disclosure Requirement*, 45 Loy. U. Chi. L.J. 369, 373-374 (2013) (outlining the benefits of a "robust disclosure requirement").

The reasonableness requirement also "helps the drafter of the patent to express, and the reader of the patent to understand, what the claims are actually saying." Rantanen, *supra*, at 374. That too will go a long way toward improving the patent system. Many judges "dread" patent cases because claims are too prolix, and jury results can be "unpredictable," regardless of the merits of the patentee's suit. Sean B. Seymore, *The Teaching Function of Patents*, 85 Notre Dame L. Rev. 621, 639-640 (2010). An applicant who uses confusing "patentese" in a claim to describe an invention (without defining relevant terms in the specification) would face the credible threat that a court will conclude that the claim's language does not reasonably inform the public about the scope of the invention. "Stripping away the patentese would allow the judge to see the legal issues involved and help the factfinder better understand the technology." *Id.* at 641; see generally *A Panel Discus-*

sion: Claim Construction from the Perspective of the District Judge, 54 Case W. Res. L. Rev. 671 (2004).

At the same time, the requirement does not unduly burden patent applicants or undermine the incentives created by the patent system. Recognizing that words are often poor tools for describing cutting-edge inventions, the requirement tolerates reasonable ambiguity. It ensures that inventors can claim the full scope of their invention without undue fear that courts will strike down their patents. And, in so doing, it avoids diverting inventors from the patent system to other forms of protecting their intellectual property, such as keeping the invention to themselves as a trade secret. It thus "ensures that patents provide information about cutting-edge technological advances that others can use to improve on the new technology." Rantanen, *supra*, at 373.

3. The Law Provides Guidance for Assessing Whether Claim Language Reasonably Informs Persons of Ordinary Skill in the Art of the Metes and Bounds of the Invention

"Reasonableness" might be "incapable of *precise* judicial definition." *Morgan Stanley Capital Grp. Inc.* v. *Pub. Util. Dist. No. 1 of Snohomish Cnty.*, 554 U.S. 527, 532 (2008) (emphasis added). But this Court and other courts have already provided several factors that further define whether a claim is reasonably definite. Claims should be viewed from the perspective of a person skilled in the art, "construed in the light of the specifications," and "read with a view to ascertaining the invention." *United States* v. *Adams*, 383 U.S. 39, 49 (1966); see *Orthokinetics, Inc.* v. *Safety Travel Chairs, Inc.*, 806 F.2d 1565, 1576 (Fed. Cir. 1986). Where there "is an inexplicable inconsistency" between claims and specifications, the claims themselves may be indefinite. *In re Cohn*, 438

F.2d 989, 993 (C.C.P.A. 1971). Facially ambiguous claim terms that can only be discerned through "testing" may likewise fail to satisfy the "definiteness" requirement. *United Carbon*, 317 U.S. at 234-236.

Although the PTO's zero-ambiguity standard should not be adopted, the PTO has set forth other relevant factors to determine "whether the claims set out and circumscribe a particular subject matter with a *reasonable degree* of clarity and particularity." MPEP, *supra*, §2173.02 (emphasis added). Factors include the "content of the particular application disclosure," the "teachings of the prior art," and whether the claim involves "a process without setting forth any steps involved in the process." *Ibid.* For patents that have a claim using a term of degree, courts would look to whether a specification "provides some standard for measuring that degree." *Id.* §2173.05. And where "a subjective term is used in the claim, the examiner should determine whether the specification supplies some standard for measuring the scope of the term, similar to the analysis for a term of degree." *Ibid.* "Some objective standard," the PTO has explained, "must be provided in order to allow the public to determine the scope of the claim." *Ibid.* But "[a] claim that requires the exercise of subjective judgment without restriction may render the claim indefinite." *Ibid.* And "[c]laim scope cannot depend solely on the unrestrained, subjective opinion of a particular individual purported to be practicing the invention." *Ibid.* Those factors all assist a court in determining whether a claim informs the public about the metes and bounds of the invention.

District courts, moreover, can compare the breadth of the specification with the language of the claim. If the product alleged to be infringing bears no relation to what the inventor described in the specification, but is argua-

bly within the language of the claim when read in isolation, that may be an indication that the claim language fails to distinctly claim what the applicant regarded as his invention with any reasonable amount of particularity.

4. Other Areas of the Law Reflect Similar Principles

In interpreting "definiteness" requirements in other contexts, this Court and others have regularly concluded that they embody a principle of reasonableness. For example, the Warrant Clause's particularity requirement provides that "no Warrants shall issue, but upon probable cause, supported by Oath or affirmation, and *particularly describing* the place to be searched, and the persons or things to be seized." U.S. Const. amend. IV (emphasis added). Like patent law's "definiteness" requirement, the Warrant Clause's particularity requirement serves public-notice and scope-limiting functions: It informs the public about the scope of the warrant, "ensur[ing] that the search will be carefully tailored to its justifications, and will not take on the character of the wide-ranging exploratory searches the Framers intended to prohibit." *Maryland* v. *Garrison*, 480 U.S. 79, 84 (1987). The Warrant Clause's particularity requirement thus prohibits "general searches" and "prevents the seizure of one thing under a warrant describing another." *Andresen* v. *Maryland*, 427 U.S. 463, 480 (1976).

The Warrant Clause's particularity requirement is judged by reasonableness. "[T]he police," this Court has explained, "may conduct searches only pursuant to a *reasonably detailed warrant*." *Garrison*, 480 U.S at 89 n.14 (emphasis added). "It is enough if the description is such that the officer with a search warrant can with reasonable effort ascertain and identify the place intended." *Steele* v. *United States*, 267 U.S. 498, 503 (1925); see also,

e.g., *United States* v. *George*, 975 F.2d 72, 76 (2d Cir. 1992) ("A failure to describe the items to be seized with as much particularity *as the circumstances reasonably* allow offends the Fourth Amendment." (emphasis added)). In that context, no less than here, the law demands that the applicant "particularly describ[e]" the object of his application. See U.S. Const. amend. IV. In that context, the governing standard is not one of perfection that precludes competing constructions or interpretations. Nor is it a toothless standard that upholds warrants so long as they are not devoid of meaning. It is instead a balanced standard of reasonableness.

The same principle applies under the Federal Rules of Civil Procedure. Rule 9(b) provides that, "[i]n alleging fraud or mistake, a party must state *with particularity* the circumstances constituting fraud or mistake." Fed. R. Civ. P. 9(b) (emphasis added); see also Fed. R. Civ. P. 34(b)(1)(A) (discovery request "must describe with reasonable particularity each item or category of items to be inspected"). Among other things, Rule 9(b)'s particularity requirement "provide[s] defendants with adequate notice to allow them to defend the charge." *Kearns* v. *Ford Motor Co.*, 567 F.3d 1120, 1125 (9th Cir. 2009). "[A]lthough Rule 9(b) calls for fraud to be pleaded with particularity, the allegations still must be as short, plain, simple, direct, and concise *as is reasonable under the circumstances*." 5A Wright *et al.*, *Fed. Prac. & Proc.* § 1291 (3d ed. rev. 2013) (emphasis added). The standard does not require prolix pleading in which every allegation is spelled out in painstaking detail in thousand-plus page complaints. It instead requires such detail as will reasonably apprise the defendant of the nature of the charge while providing courts with "a reasonable basis" to infer fraud. *Ebeid ex rel. United States* v. *Lungwitz*, 616 F.3d

993, 998 (9th Cir. 2010); see also *U.S. ex rel. Lemmon* v. *Envirocare of Utah, Inc.*, 614 F.3d 1163, 1172 (10th Cir. 2010) (allegations under the False Claims Act—which is governed by Rule 9(b)—"need only show the specifics of a fraudulent scheme and provide an adequate basis for a reasonable inference that false claims were submitted as part of that scheme"); *Corwin* v. *Marney, Orton Invs.*, 788 F.2d 1063, 1068 n.4 (5th Cir. 1986).

* * *

Simply put, where the law demands a particularized description, that does not mean and has never meant it demands a wholly unambiguous one. Especially in the area of patents, the use of words to describe and cabin the claimed invention will always yield imperfections. Claims will need to be construed and the precise boundaries of the claims will need to be determined. To hold otherwise threatens to render illusory the patent system's promise of fair rewards for invention. But the Federal Circuit has converted that tolerance into a license for claims that are formulated as to be so infinitely malleable that the public has no fair notice of the scope of the claimed invention. By contrast, the reasonableness-based approach this Court has employed in the patent context requires such particularity as is reasonable under the circumstances. The standard properly balances competing interests. It ensures that inventors are not arbitrarily denied the rights patent law promises while making certain that one central goal of the "definiteness" requirement—reasonably informing persons skilled in the art of the boundaries of the claimed invention—is properly fulfilled.

CONCLUSION

The judgment of the Federal Circuit should be reversed.

Respectfully submitted.

JOHN M. WHEALAN
4613 Merivale Road
Chevy Chase, MD 20815
(202) 994-2195

KEVIN T. KRAMER
Deputy General Counsel – Intellectual Property
YAHOO! INC.
701 First Ave.
Sunnyvale, CA 94089
(408) 349-3044

JEFFREY A. LAMKEN
Counsel of Record
MARTIN V. TOTARO
MOLOLAMKEN LLP
The Watergate, Suite 660
600 New Hampshire Ave., NW
Washington, D.C. 20037
(202) 556-2000
jlamken@mololamken.com

KAITLIN R. O'DONNELL
MOLOLAMKEN LLP
540 Madison Ave.
New York, NY 10022
(212) 607-8160

Counsel for Amicus Curiae

MARCH 2014